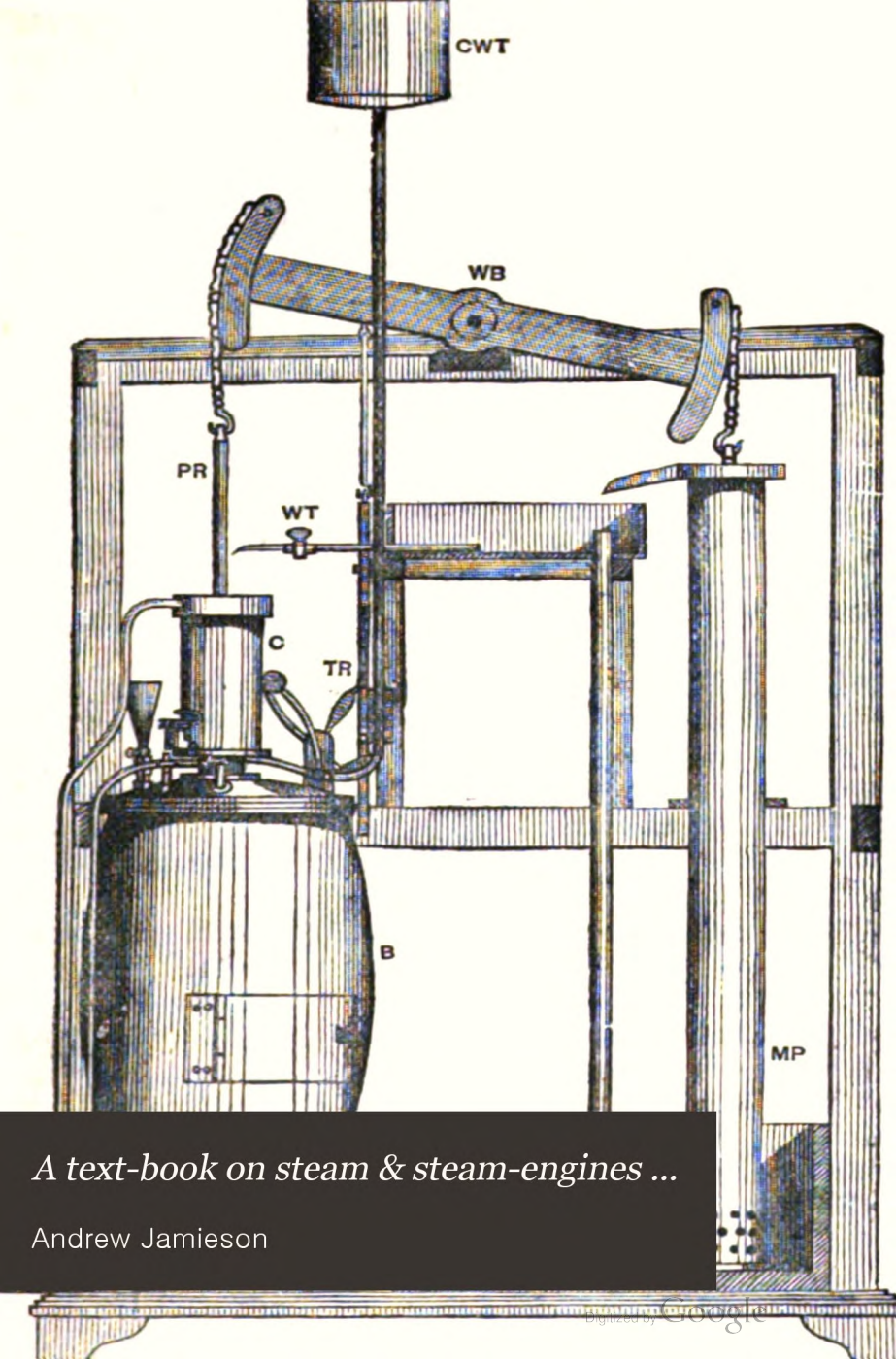

A text-book on steam & steam-engines ...

Andrew Jamieson

Digitized by Google

A TEXT-BOOK

ON

STEAM AND STEAM ENGINES.

FIFTH EDITION.

Jamieson

Digitized by Google

STANDARD TECHNICAL WORKS.

Pocket-Size, Leather. 9s.

BOILERS: THEIR CONSTRUCTION AND STRENGTH.

A Handbook of Rules, Formulæ, Tables, &c., relative to Material, Scantlings, and Pressures, Safety Valves, &c. For the use of Engineers, Inspectors, Surveyors, Draughtsmen, Boilermakers, and Steam Users.

By T. W. TRAILL, F.E.R.N., M. Inst. C.E.,
Engineer-Surveyor-in-Chief to the Board of Trade.

"We can strongly recommend Mr. Traill's Book as being the most complete and eminently practical work on the subject."—*Marine Engineer.*
"Will prove INVALUABLE to the Engineer and Practical Boilermaker."—*Practical Engineer.*

Eighth Edition, Enlarged. *Price* 18s.

MARINE ENGINEERING (A MANUAL OF).

The Designing, Construction, and Working of Marine Machinery.

By A. E. SEATON, M.I.N.A., &c.,
Lecturer on Marine Engineering, Royal Naval College, Greenwich.

"The Student, Draughtsman, and Engineer will find this work the most valuable Handbook of Reference on the Marine Engine now in existence."—*Marine Engineer.*

In Crown 8vo, very fully Illustrated. Cloth, 3s. 6d.

STEAM-BOILERS:

THEIR DEFECTS, MANAGEMENT, AND CONSTRUCTION.

By R. D. MUNRO,
Engineer of the Scottish Boiler Insurance and Engine Inspection Company.

"A valuable companion for Workmen and Engineers engaged about Steam-Boilers, ought to be carefully studied, and always at hand."—*Colliery Guardian.*
"Presents a great deal of useful information in a succinct and practical manner."—*Ironmonger.*

BY W. J. MACQUORN RANKINE, C.E., LL.D., F.R.S.,

Late Regius Professor of Civil Engineering in the University of Glasgow.

In Crown 8vo, Cloth, with Numerous Tables and Diagrams.

1. APPLIED MECHANICS. *Twelfth Edition.* 12s. 6d.
2. CIVIL ENGINEERING. *Seventeenth Edition.* 16s.
3. THE STEAM ENGINE. *Twelfth Edition.* 12s. 6d.
4. MACHINERY AND MILL-WORK. *Sixth Edition.* 12s. 6d.
5. USEFUL RULES AND TABLES. With Appendix for Electricians. *Seventh Edition.* 10s. 6d.
6. A MECHANICAL TEXT-BOOK. *Third Edition.* 9s.

*** The "*MECHANICAL TEXT-BOOK*," by Prof. Rankine and E. F. Bamber, C.E., was designed as an INTRODUCTION to the above series of Manuals.

Sixth Edition. *Pocket-Size,* 628 *pp., Leather.*

A POCKET-BOOK OF ELECTRICAL RULES AND TABLES

For the Use of Electricians and Engineers.

By JOHN MUNRO, C.E.,
and
ANDREW JAMIESON, F.R.S.E., M.I.C.E., M.S.T.E.

"Wonderfully perfect. . . . Worthy of the highest commendation we can give it."—*Electrician.*
"The sterling value of Messrs. Munro & Jamieson's Pocket-Book."—*Electrical Review.*

LONDON: CHARLES GRIFFIN & CO., EXETER STREET, STRAND.

Digitized by Google

THE NEW YORK
PUBLIC LIBRARY
ASTOR, LENOX
TILDEN FOUNDATIONS

Digitized by Google

DUPEDONIAN IRON WORKS, GLASGOW.

All internal parts, $\frac{3}{8}$". Ends, $\frac{9}{16}$".
Do., $\frac{7}{16}$". Do., $\frac{5}{8}$".

FAL SECTION.

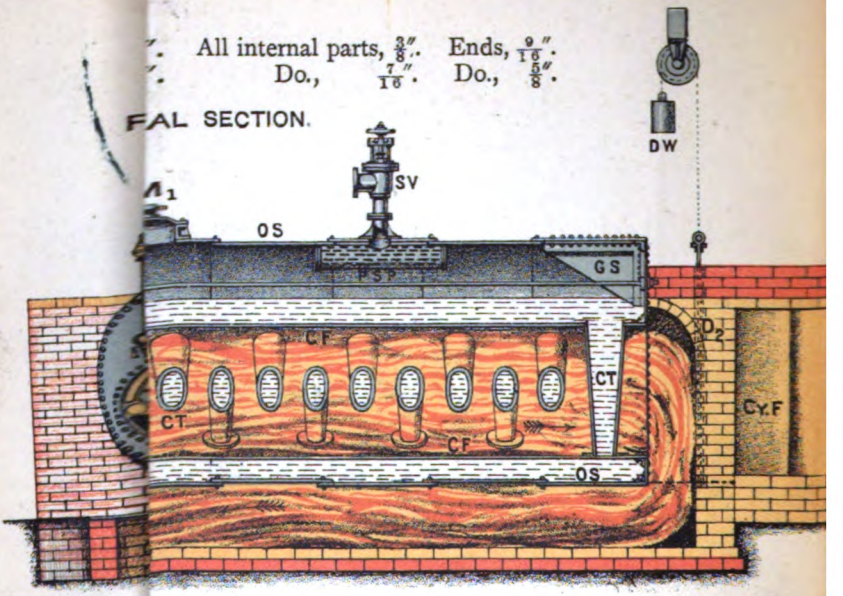

Outer Shell.	D W S V For Dead Weight Safety Valve.
Longitudinal Stays.	S G ,, Steam Guage.
Gusset Stays.	S W ,, Steam Whistle.
Manholes.	G G ,, Glass Water Gauges.
Perforated Steam Pipe.	F W P ,, Feed Water Pipe and Valve.
Stop Valve.	B O C ,, Blow Off Cock.

PLAN.

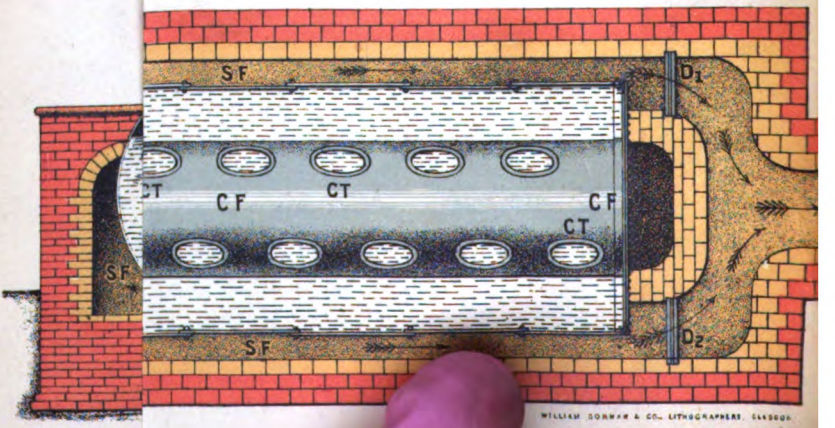

WILLIAM SORNAM & CO., LITHOGRAPHERS, GLASGOW.

Digitized by Google

Have ad 1919. title changed to
.. heat & heat engines

this ad not in Rd

With
Chas Griffin & Co
Compliments

A TEXT-BOOK

ON

STEAM AND STEAM-ENGINES.

SPECIALLY ARRANGED
FOR THE USE OF SCIENCE AND ART,
CITY AND GUILDS OF LONDON INSTITUTE,
AND OTHER ENGINEERING STUDENTS.

BY

ANDREW JAMIESON, M. INST. C.E.,
PROFESSOR OF ENGINEERING, THE GLASGOW AND WEST OF SCOTLAND TECHNICAL COLLEGE;
MEMBER OF THE INSTITUTION OF ELECTRICAL ENGINEERS;
FELLOW OF THE ROYAL SOCIETY, EDINBURGH;
JOINT-AUTHOR OF "ELECTRICAL RULES,
TABLES, AND FORMULÆ."

1849-

FIFTH EDITION.

With Numerous Diagrams, Four Folding-Plates,
and Examination Questions.

LONDON:
CHARLES GRIFFIN AND COMPANY,
EXETER STREET, STRAND.
1889.

[All Rights Reserved.]

Digitized by Google

NEW YORK
PUBLIC LIBRARY
49216A
ASTOR, LENOX AND
TILDEN FOUNDATIONS
R 1922 L

Digitized by Google

PREFACE.

In a leading article on educational Engineering Treatises, which appeared lately in a well-known journal,* the following remarks, amongst others, struck me as being very suggestive to any one engaged in the preparation of a Text-Book for Students, and as well worthy of attention:—

"We are convinced that all the instruction contained in a great number of the engineering books already published, could be printed much more simply and concisely, and also much more lucidly, if authors sought only to impart their knowledge with the greatest brevity, without thinking at all of displaying their own learning or seeking to make a thick volume. . . . There is too much paste and scissors work, too much book-making and padding nowadays. . . . A considerable number of engineering books are so learned as to be quite over the heads of most students. Many more are so verbose, so laden with abstruse formulæ, letters, and diagrams, that the solution of the simplest question involves hours of time that can ill be spared from other work. It is no doubt true, that many engineering questions demand elaborate writing to give a precise answer with mathematical exactness; but in the majority of engineering practice, absolute exactness of such a nature is not necessary, and if a useful approximation will amply suffice, and is readily obtainable in some simply written book, that is the one that will be adopted."

The object, therefore, aimed at in the following pages, was the production of such a "simply written book" as should *not* be above the heads of my readers, but should bring the information desired, step by step, within their grasp. Whether I have succeeded in accomplishing this object, is a question which, of course, must be decided by those competent to judge.

I would only add that the work is the result of gradually improved lectures delivered on Steam and Steam Engines

* *The Engineer*, July 30, 1886.

Digitized by Google

during the last six years to the students of the Glasgow College of Science and Arts.

Although all the questions (elementary, advanced, and honours) that have been set at the Examinations in Steam of the Science and Art Department for the last ten years, as well as most of those in the Steam Section of the City and Guilds of London Institute's Examinations for Mechanical Engineering, besides many others, have been systematically arranged at the end of the Lectures in accordance with their order of treatment, the work is not by any means intended as a mere cram-book for these examinations. It is designed to be an easy introduction to Professor Rankine's well-known treatise on *The Steam Engine*, and to Mr. Seaton's practical and highly appreciated *Manual of Marine Engineering*, both issued by the publishers of the present volume.

In all new and specially done cuts a uniform system of reference letters has been observed throughout the book, viz., the use of the first letter or letters of the name or names of the parts has been adopted to indicate the part, and, in addition to a general description of the figures, an "index to the parts" has been printed either immediately underneath or alongside of the same. This system is always insisted upon by me with my own students in writing out their home exercises or examinations, and I have found that it greatly facilitates the reading of drawings, as well as a quick understanding of the different parts of a machine.

In every instance where matter has been taken from other books, the author's name and the work referred to have been indicated in a footnote, and in many cases where further information is likely to be required by honours, or advanced students, the book or source where it may be obtained has been mentioned. In addition to these notes, a selected list of several standard Treatises and Papers on Steam and Steam Engines will be found in the Appendix.

My cordial thanks are due to Mr. A. C. Kirk, M. Inst. C.E., and his assistant, Mr. John H. Macalpine, for valuable suggestions in regard to the treatment of various parts of the first half of the book. Mr. Brownlee's appendix to Lecture XIV., on "Empirical Formulæ for the Pressure, Density, Volume, and Work of Steam," is all the more valuable owing to its not having been published before, and to the fact that Professor Rankine based the constants in several of his well-known formulæ on Mr. Brownlee's careful experiments and investigations on the properties of steam.

I have also to acknowledge the able assistance afforded me while the work was in progress, by the following old students of the Glasgow College of Science and Arts, viz., Messrs. H. Osbourne Bennie, Wh. Sc., Stud. Inst. C.E.; James Welsh; Wm. Borrowman, Wh. Sc.; J. H. A. M'Intyre, Wh. Sc.; and Thos. C. Fulton.

Finally, I have to tender my best thanks to all friends who, by furnishing drawings, &c., have enabled me to place before students some of the more recent developments in engineering practice.

Elementary or first-year students should devote most of their attention to the history and elementary principles of the Steam Engine, together with the experiments on heat and steam, and the action of steam in the cylinder, given in the first eleven lectures. They should also reproduce from memory neat free-hand sketches with reference letters, and descriptions in their own words of the general outline and details of the engines noticed, or of other engines of a similar kind, which they have met with in the workshop; and they should work out carefully and exactly all the elementary arithmetical questions. They may, therefore, with advantage pass over Lecture XII., Zeuner's diagrams in Lecture XIII., the Appendix to Lecture XIV., from compound engine diagrams to end of Lecture XV., Lecture XVII., the latter half of Lecture XXII., and Lecture XXIV. Advanced, or second-year students, should study the whole book, and work out most carefully at home all examples which they have not previously mastered. Honours, or third-year students, should revise the more difficult portions of the book, work out any of the examples which they before omitted to consider, and refer to the different treatises mentioned in the footnotes, as well as in the Appendix at the end, for more information on the subject of their study.

If any errors should be observed by readers, or answers obtained to unanswered arithmetical questions, I shall feel much obliged for an early note of them, and I shall also gratefully acknowledge the receipt of any suggestions or communications tending to increase the usefulness of the work, as my desire is, as far as possible, to keep it abreast of the times.

ANDREW JAMIESON.

College of Science,
Glasgow, *September*

Digitized by Google

PREFACE TO FIFTH EDITION.

Extensive and important additions, both to the Text and the Illustrations, have been made in this new Edition. To Lecture XVI. an illustration and description of the new forms of Brake used in determining the brake horse-power of the "Ajax" Glasgow Gas Engine, have been added. The whole of Lecture XVII., on the Action of the Connecting-rod and Crank, Turning Moments, and the Effects of the Inertia of the Moving Parts in High Speed Engines, has been re-written and extended. A diagram drawn to scale, and account of the action and peculiar construction of the cylinders in Mr. Brock's patent Quadruple-Expansion Engines, together with reduced copies of the Indicator-diagrams taken from the engines of the S.S. "*Buenos Aires*" (built and engined by the Messrs. Denny, of Dumbarton) have been incorporated in Lecture XXIV. A very complete set of scale working-drawings (including a Folding Plate), with detailed index to parts and full descriptive specification, of an Express Locomotive lately built by Messrs. Dubs & Co., of Glasgow, for the London, Chatham, and Dover Railway Co., have been introduced into Lecture XXX. The whole of the Advanced and the Honours Questions set at the 1889 May Examination on "Steam" by the Science and Art Department, have been allocated to the examples at the end of Lectures and the Appendix. I have availed myself, as far as possible, of hints kindly sent me by Engineers, and will be much obliged for any further suggestions which tend to increase the usefulness of the work.

My best thanks are again due to Dr. A. C. Kirk and his Scientific Assistant, Mr. John H. Macalpine, and to my own Assistant, Mr. John Anderson, for their kind contributions and help. I am also indebted to Mr. C. A. Mathey, Engineer, Demerara, for a lengthy and most acceptable criticism on many important points.

ANDREW JAMIESON.

The Glasgow and West of Scotland
Technical College,
Glasgow, *September, 1889.*

Digitized by Google

CONTENTS.

PAGES

LECTURE I.

Early Forms of the Steam Engine: Hero's, Savery's, and Newcomen's, ... 1-7

LECTURE II.

Watt's Model of Newcomen's Engine in Glasgow University—Watt's Single- and Double-Acting Engines—Hornblower's Engine—List of Steam Engine Patents to 1805, . . 8-21

LECTURE III.

Temperature, Thermometry, Pyrometers, ... 22-31

LECTURE IV.

Quantity of Heat—Unit of Heat—Calorimetry—Capacity for Heat—Specific Heat—Table of Specific Heats of Substances, . 32-37

LECTURE V.

Transfer or diffusion of Heat—Radiation—Conduction—Convection, 38-48

LECTURE VI.

Nature of Heat—Heat is not a Substance—Rumford, Davy, and Joule's Experiments—Conversion of Work into Heat—First Law of Thermo-dynamics—Joule's Mechanical Equivalent of Heat, ... 49-55

LECTURE VII.

Sensible and Latent Heats of Water and Steam—Temperature and Pressure of Steam—Regnault's Experiments and Table of his results, ... 56

Digitized by Google

PAGES

LECTURE VIII.

The successive effects produced by the continuous application of Heat to a piece of very cold Ice until Dissociation takes place—The boiling point of a Liquid—Experiment of Water boiling at pressures less than one Atmosphere—Use of large Air Pumps in connection with Condensers, . . . 64-69

LECTURE IX.

Total Heat of Evaporation—Quantity of Water required for Condensation of Steam, with Examples, ... 70-74

LECTURE X.

Examples of the Quantity of Water required for Condensation of Steam with a Jet Condenser continued—Also with a Surface Condenser — Tube Surface required under different conditions, ... 75-78

LECTURE XI.

Pressure and Volume of a Gas—Boyle's Law—Pressure, Volume, and Density—Watt's Diagram of Work, with Examples, . 79-85

LECTURE XII.

Charles' Law of the Expansion of Gases—Absolute Zero of Temperature — Expansion of a Gas doing External Work—Adiabatic Expansion—Heat Engines—Carnot's Principle, . 86-93

LECTURE XIII.

Distribution of Steam in a Cylinder—Lap and Lead of a Valve, &c., Angle of advance of an Eccentric, Points of Admission, Cut-off, Release, and Compression—Diagram of the relative positions of Crank and Piston—Zeuner's Valve Diagrams, . 94-104

LECTURE XIV.

Expansion of Steam—Isothermal, Saturation, and Adiabatic Curves —Liquefaction in the Cylinder—Steam Jacketing—Superheating—Effects of Clearance—Compression or Cushioning —Lead —Wire-drawing — Release — Theory of Compound Engines, ... 10

Digitized by Google

PAGES

LECTURE XV.

Watt's Indicator—Richard's Indicator—Thomson's Fast-Speed Indicator—Taking of Indicator Diagrams—Examples of Indicator Diagrams from Non-condensing, Condensing, Two-Cylinder Compound Engines, and Triple-Expansion Engines, 122-135

LECTURE XVI.

Nominal and Indicated Horse-Power—Rule for finding the Indicated Horse-Power of an Engine—Formula for finding the Mean Pressure—Brake Horse-Power, and how to find it by Absorption and Transmission Dynamometers, with examples, 136-154

LECTURE XVII.

Action of the Crank—Tangential and Radial Forces—Diagrams of Twisting Moments with Uniform and with Variable Steam Pressure on Piston, and neglecting as well as taking Account of the Obliquity of Connecting-rod — Effect of Inertia of Moving Parts—Case of a Horizontal Engine with Connecting-rod of Infinite Length—Graphic Representation of the Effect of Inertia—Case of a Horizontal Engine with Connecting-rod of Finite Length — General Problem of Determining the Stresses Produced by a heavy Body Moving along a Straight line Illustrated by the Case of an Actual Slide Valve, ... 155-169c

LECTURE XVIII.

Stationary Land Engines — Horizontal Non-condensing Steam Engine—Horizontal Condensing Steam Engine—Compound Non-condensing Steam Engine with Locomotive Boiler—Compound Coupled Fixed Condensing Engine with details of Automatic Trip-Expansion Gear, Crosshead, &c., . . 170-185h

LECTURE XIX.

Early History of Marine Engines up to 1815—Side Lever Engine—American Beam Engine—Steeple Engine—Double Cylinder Engine—Oscillating Engine with Valve Gear, . . 187-200

Digitized by Google

PAGES

LECTURE XX.

Diagonal Direct-Acting Engines, with Joy's Valve Gear and Alley's Flexible Coupling, &c.—Paddle-Wheels—Radial Paddle-Wheel—Feathering Paddle-Wheels, . . . 201-212

LECTURE XXI.

Early Invention of the Screw Propeller—Geared Engines—Penn's Trunk Engine—Maudslay's Return Connecting-Rod Engine—Horizontal Direct-Acting Engine—Vertical Direct-Acting Engines, ... 213-219

LECTURE XXII.

Generating a Screw Surface—Pitch of a Screw—Length of Screw Blade—Depth of Thread—Angle of Screw—Circumference of Screw—Moulding a Screw—How to find the Pitch of a finished Propeller—Early forms—Ordinary form—Griffith's, Hirtsch's, Magin's, and Thornycroft's Screws—Slip of the Screw—Thrust—Negative Slip—Best Diameter, Revolutions and Pitch for a Screw-Propeller, ... 220-232

LECTURE XXIII.

Description and complete specification of the Engines of the S.S. *St. Rognvald*, built and engined by Messrs. Hall, Russell & Co., Aberdeen, ... 233-249

LECTURE XXIV.

Theory of Triple-Expansion Engines—Triple-Expansion Engines of the S.S. *Arabian*—Rankin & Blackmore's Quadruple-Expansion Disconnective Engines—Brock's Patent Quadruple-Expansion Engines, ... 250-263

LECTURE XXV.

Details of Engines—Cylinders—Old D Slide Valve—Ordinary or Locomotive Slide Valve—Double-Ported Slide Valve—Gridiron Slide Valve—Thom's Patent Double-Ported Trick Valve—Piston Valve—Reversing Link Motion . . . 26

Digitized by Google

PAGES

LECTURE XXVI.

Details of Engines continued—Pistons and Piston Rods—Cross-heads — Connecting Rods — Crank Shafts — Main-Shaft Bearings—Thrust Bearings—Condensers, Jet and Surface—General Remarks on Condensers—Air Pumps—Air-Pump Valves—Circulating Pumps—Gwynne's Centrifugal Pumps, 276-297

LECTURE XXVII.

Waggon Boiler—Egg-Ended Boiler—Cornish Boiler—Lancashire Boiler — Breeches-Flued Boiler — Water Tube Boilers — Babcock & Wilcox Boiler—Vertical Boilers—Man-Holes, . 298-313

LECTURE XXVIII.

Rectangular Boilers—Cylindrical Boilers—Single-ended and double-ended Boilers—Boilers of S.S. *St. Rognvald* with specification—High-pressure Boilers of S.S. *Arabian*—Double-ended Boilers of S.S. *Wingsang*—Shanks' Small Vertical Marine Boiler for Steam Tugs, &c., ... 314-326

LECTURE XXIX.

Materials used in Boiler Construction—Wrought Iron, Steel, Copper—Joints of Boiler Plates, Riveted Joints, Punching and Drilling, Hand and Machine Riveting, Caulking, Welded Joints—Methods of Connecting the parts of the Shell, and Flues—Staying of Boilers—Strength of Boiler Shells—Strength of Flues—Strengthening Hoops for Flues —Corrugated Furnaces, ... 327-352

LECTURE XXX.

Early History of the Locomotive Engine—Caledonian Railway Passenger Locomotive—Folding-page Illustration of Express Locomotive by Messrs. Dubs & Co., with Complete Explanatory Index and Descriptive Specification, Drawings of Details and Dimensions—Giffard's Injector—Compound Locomotives, ... 353-385

Digitized by Google

PAGE

APPENDIX I.

All the remaining Questions set at the last *ten* Steam Examinations of The Science and Art Department's, and most of the other Questions in the Steam Section of the City and Guilds of London Institute's Mechanical Engineering Examinations since their commencement in 1880, which could not be conveniently included at the ends of the several preceding Lectures, ... 386-39

APPENDIX II.

Selected List of Books and Papers for Honours Students, . . 395-39

INDEX, ... 397-40

Digitized by Google

STEAM AND STEAM ENGINES.

LECTURE I.

CONTENTS.—Early Forms of the Steam Engine: Hero's, Savery's, and Newcomen's.

THE student will find the history of the rise and progress of the Steam Engine both interesting and instructive. Two lectures will therefore be devoted to reviewing, as concisely as possible, the struggles of early inventors to produce mechanical work from steam.

Hero's Engine.—The first application of the elastic force of steam of which there is any record, was by Hero of Alexandria, about 130 B.C.*

From the following figure and index of parts the construction and action will at once be understood. The fire at, F, heats the water in the caldron, C, generating steam; the steam passes up by the pipe, P, in the direction shown by the arrows into the globe, G, first expelling the air, and then exhausting by the two nozzles, N_1, N_2. Owing to the nozzles being fixed in opposite directions and at right angles to the axis on which the globe is free to rotate, the reaction from the steam on the air produces a "couple," and thus turns the globe at a very high speed, but with so little power that a great expenditure of fuel would be required to develop even a horse-power.

No other notice of the application of steam to produce motion is found until about the year 1563, when Mathesius hints at the possibility of constructing an apparatus similar in its action to that of our modern steam engine.† No device of a

* Glass models, called *Whirling Oelipiles*, are obtainable at any optician's, for illustrating the action of Hero's engine, on the "Barker mill principle."

† For complete descriptions of the attempts made by De Caus, 1624; Giovanni Branca, 1628; Marquis of Worcester, 1663; Sir Samuel Moreland, 1682; Papin, 1685 to 1695, &c., see *Descriptive History of the Steam Engine*, by Robert Stuart, C.E., published in 1825, and dedicated to Dr. Birkbeck, "Patron of the (late) Glasgow Mechanics' Institution, and at one time Professor of Natural Philosophy in the College founded by Professor Anderson in the City of Glasgow." Also, see a treatise by John Farey, on *The Steam Engine*, 1827; and Prof. Thurston's *History of the Steam Engine*, published by C. Kegan, Paul & Co.

Digitized by Google

thoroughly practical nature worth drawing the attention of students to occurs, until Captain Thomas Savery brought out his patent steam engine for raising water from mines in 1698.

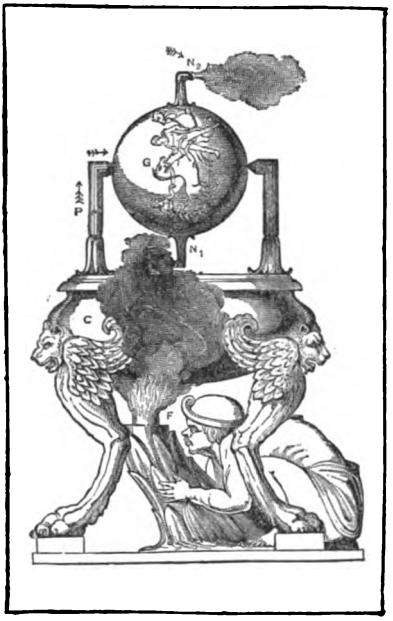

HERO'S ENGINE, 130 B.C.

F for Fire.
C ,, Caldron, containing water.
P ,, Pipe, steam supply.
G for Globe.
N_1, N_2 ,, Nozzles, steam exhaust.

Savery's Engine.—Steam from the boiler, B, is admitted to the receiver, R, by opening the steam cock, S C. When the receiver is filled with steam, the cock, S C, is closed, and C J opened, which allows a douche of cold water to play on the outside of R, thus causing condensation and producing a vacuum. The atmospheric pressure acting on the mine water, at M W, forces water up through the suction valve (or cock), S V, nearly filling the receiver. C J is then closed, and S C opened, thus permitting the steam from the boiler to force the water now in the receiver up through the delivery valve (or cock), D V, and the discharge pipe, D P, to any convenient place clear of the mine.

In Savery's actual engine he adopted a complete duplex set of

Digitized by Google

boilers, receivers, and cocks, so that the operations of filling one receiver and emptying the other might be conducted simultaneously.* He placed his boilers and receivers about 20 feet above

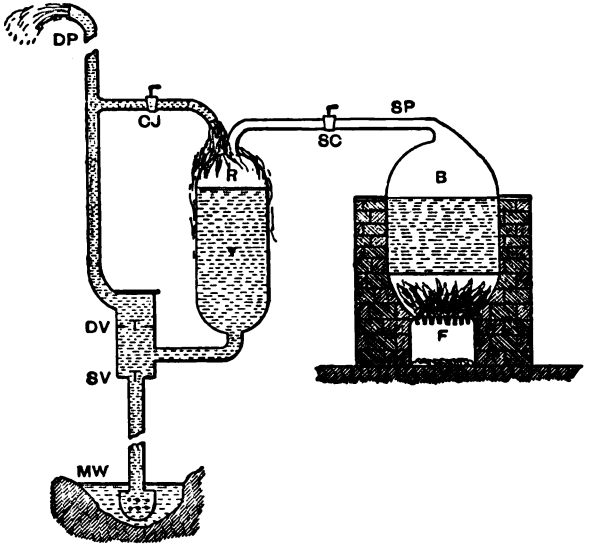

SAVERY'S ENGINE, 1698.

F	for Furnace.	MW	for Mine water.
B	,, Boiler.	SV	,, Suction valve.
SP	,, Steam pipe.	DV	,, Delivery valve.
SC	,, Steam cock.	CJ	,, Condensing jet.
R	,, Receiver.	DP	,, Discharge pipe.

the bottom of the mine water, or well, and the height of the overflow from the discharge pipe about 30 feet above the receiver. The efficiency of a Savery engine, as measured by the weight of coal consumed, was tested by Smeaton, in 1774, and found to be about $\frac{1}{10}$ of what can now be realised by a modern pumping-engine. The loss of heat-energy, due to the alternate heating and cooling of the receiver, added to the condensation of the steam upon coming into direct contact with the water when forcing the latter out of the receiver, combined with the impossi-

* Desagulier, in 1716, improved upon Savery's engine by introducing a two-way cock between the boiler, the receiver, and the cold water injection, and introduced an inside rose injection for condensing the steam in the receiver. See Stuart on *The Steam Engine*, 1825, Fig. 20.

Digitized by Google

bility of placing the receiver much more than 20 feet above the bottom of the mine,* and the inability of engineers in those days to construct boilers of sufficient strength to withstand a steam pressure more than 15 lbs. on the square inch,† prevented the adoption of Savery's engine in most mines.

Newcomen's Atmospheric Engine.—In 1705 Thomas Newcomen, a blacksmith, associated with Savery and John Cawley, a glazier, made the experiment of introducing steam under a piston moving in a cylinder. They formed a vacuum by condensing the steam by an affusion of cold water on the *outside* of the steam vessel; and the weight of the atmosphere pressed the piston to the bottom of the cylinder. This was the first form of atmospheric engine—the simplest and most powerful machine that had hitherto been constructed. After a great many laborious attempts at Wolverhampton to make one of their engines work satisfactorily, they were one day (in March, 1712) surprised "to see the engine go several strokes, and very quick together, when, after a search, they found a hole in the piston, which let the cold water in to condense the steam in the inside of the cylinder, whereas before they had always done it on the outside." This fortunate observation gave rise to the improvement of condensing by injection, which thus rendered the cold water jacket of their steam cylinder unnecessary, and they thereafter manufactured their engines in the form shown in the following figure.

The mine pumps, M P, weighted pump-rod, W P R, and lift pump, L P, on the one side of the wooden beam, W B, being heavier than the piston, P, and piston rod, P R, always brought the piston to the top of the cylinder, C; consequently, to start the engine, the steam valve, S V, was opened, in order to expel the air by the relief or snifting valve, R V,‡ and to fill the whole cylinder with steam. The steam valve was now closed, and the injection cock, I C, opened, which caused a spray of cold water from the cold water tank, C W T, to enter the cylinder and condense the steam. The vacuum produced brought the pressure of the atmosphere into play on the top side of the piston, causing it to descend to the bottom of the cylinder, thus actuating the pumps at the other end of the beam. The condensed steam and injection water got clear away from the bottom of the

* With even a *perfect vacuum* in the receiver, the atmospheric pressure, which is usually about 15 lbs. on the square inch, could only force water up into it from a depth of 34 feet.

† Savery said, "If I could only get boilers and pipes of sufficient strength, I could force water up to a height of 1,000 feet."

‡ Called the *snifting valve* by Newcomen, because the air sniffs it blows through it.

Digitized by Google

cylinder by the eduction pipe, E P, to the feed water tank, F W T; the water from this tank being used to fill the boiler,

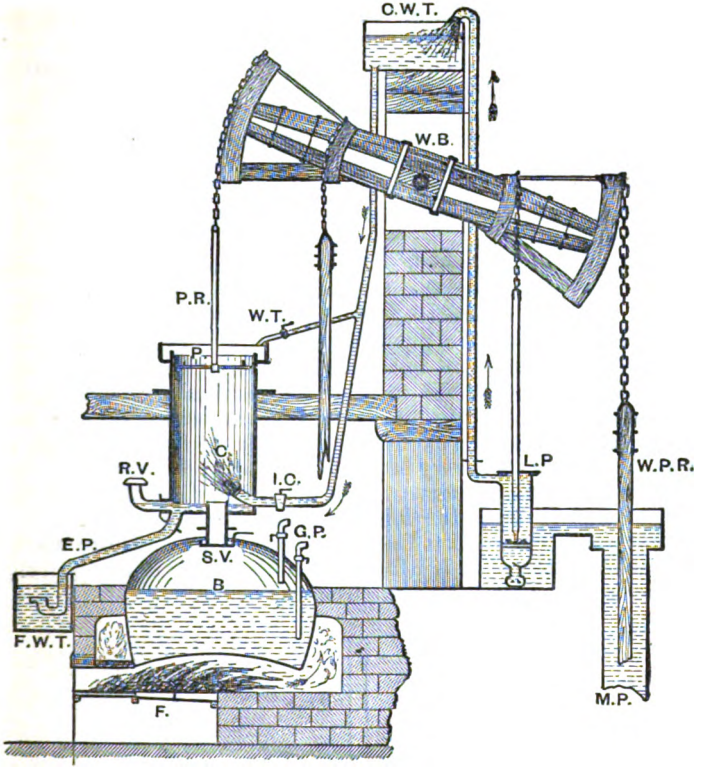

NEWCOMEN'S ENGINE, 1712.

F	for Furnace.	M P	for Mine pump.
B	,, Boiler.	L P	,, Lift pump.
G P	,, Gauge pipes.	C W T	,, Cold water tank.
S V	,, Steam valve.	W T	,, Water tap to top of piston.
C	,, Cylinder.	I C	,, Injection cock.
P	,, Piston.	R V	,, Relief or snifting valve.
P R	,, Piston rod.	E P	,, Eduction pipe.
W B	,, Wooden beam.	F W T	,, Feed water tank.
W P R	,, Weighted pump-rod.		

and the height of the water in the boiler was ascertained by the gauge pipes, G P.

Digitized by Google

At first (in 1712) the valves were opened and shut by hand. To perform these operations at the precise moment, required the most exact and unremitting attention on the part of the attendant, as the least neglect or inadvertence might be ruinous to the engine, by beating out the bottom of the cylinder, or allowing the piston to be drawn out of it. Stops were contrived to prevent both of these accidents; then strings were used to connect the handles of the cocks and valves with the beam, and finally a Mr. Beighton, in 1718, simplified the whole of these movements by causing them to be automatically opened and shut at the proper moment by means of a "tappet rod" connected with the beam. He also introduced the lever safety valve to the boiler.

Another difficulty which at first severely taxed the ingenuity of the inventors was the sudden upheaving of the cylinder, at the moment of creating the vacuum, which caused such a jolt and stress on the pipes connecting the cylinder and the boiler, as to keep them in a chronic state of leakage. It will be observed that at the instant the vacuum is produced, the piston is pressed downwards by the atmospheric pressure, but at the same time the cylinder is equally pressed upwards, so that it required to be very heavy or very securely fastened down, to prevent it rising; since no downward motion of the piston can take place until the inertia of the whole moving mass of beam, pump-rods, &c., has been overcome. This difficulty was in a measure mastered by bolting the cylinder firmly down to strong beams, and keeping it separate from the boiler.

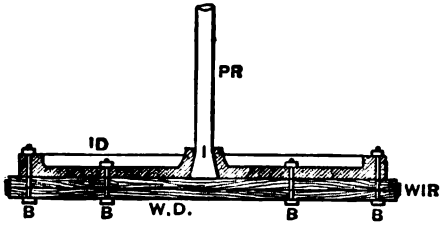

SMEATON'S PISTON.

PR for Piston rod.	BB for Bolts.
ID ,, Iron dish.	WIR ,, Wrought iron ring shrunk
WD ,, Wooden dish.	on like a cart-wheel tyre.

Newcomen's piston, which consisted of a flat plate with a broad piece of leather screwed to it and turned up the sides of the cylinder two or three inc[illegible] considerable trouble,

Digitized by Google

owing to leakage and the cutting of the leather. An improved form of piston (see preceding figure) was afterwards introduced by Smeaton.*

* For Smeaton's improvements, see Thurston's *History of the Steam Engine;* also, see articles in *The Engineer*, beginning June 6th, 1879, p. 403. For a diagram of a Newcomen engine from an old plate, see *The Engineer*, November 28th, 1879, p. 400, and for a fine diagram of an elaborate Newcomen engine, only taken down in 1880, see the same paper, January 30th, 1880, p. 84.

Lecture I.—Questions.

1. Give a free-hand sketch of Savery's engine, with index of parts. Describe its action in your own words. State clearly how it was so wasteful of fuel, and what limited its application to deep mines.

2. Suppose the water in a mine to be 25 feet below the point to which it rose in Savery's receiver, and the top of the discharge pipe 30 feet above the bottom of the receiver, what vacuum and pressure of steam in pounds per square inch would be necessary to work the engine? *Ans.* 11 lbs., and 13·2 lbs.

3. Give a free-hand sketch with index of Newcomen's engine. Describe in your own words its action, and how you would start it.

4. Suppose the diameter of a Newcomen's engine cylinder to be 30 inches, the stroke 5 feet, the effective pressure per square inch due to the vacuum, 10 lbs., and 15 up and down strokes to be made per minute, how many pounds of water would it lift per minute to a height of 100 feet, neglecting all losses due to friction, &c.? *Ans.* 5301·5 lbs.

Digitized by Google

LECTURE II.

CONTENTS.—Watt's Model of Newcomen's Engine in Glasgow University—Watt's Single and Double Acting Engines—Hornblower's Engine—List of Steam Engine Patents to 1805.

UP to the period when Smeaton perfected the atmospheric engine, the progress of the "fire engine," as the steam engine was then called, had been merely *empirical;* and in everything that depended on principle, the steam engine of that period was a most rude, wasteful, and inefficient machine. Then came the time when science was to effect more in a few years than mere empirical progress had done in nineteen centuries. In 1759, James Watt had his attention directed by Robison to the subject of the steam engine, and for a few years afterwards made various experiments on the properties of steam. In 1763 and 1764, Watt, while engaged in the repair of a small model of Newcomen's engine (belonging to the University of Glasgow, and since preserved by that University as the most precious of relics), perceived the various defects of that machine, and ascertained by experiment their causes.

Watt set to work scientifically from the first. He studied the laws of the pressure of elastic fluids, and of the evaporating action of heat, so far as they were known in his time; he ascertained as accurately as he could, with the means of experimenting at his disposal, the expenditure of fuel in evaporating a given quantity of water, and the relations between the temperature, pressure, and volume of the steam. Then, reasoning from the data which he had thus obtained, he framed a body of principles expressing the conditions of the efficient and economic working of the steam engine, which are embodied in an invention described by himself in the following words, in the specification of his patent of 1769:—*

"My method of lessening the consumption of steam, and consequently fuel, in fire engines, consists of the following principles:—

"*First.* That vessel in which the powers of steam are to be employed to work the engine, which is called the cylinder in

* Extract from *The Steam Engine and other Prime Movers*, by Prof. Rankine.

Digitized by Google

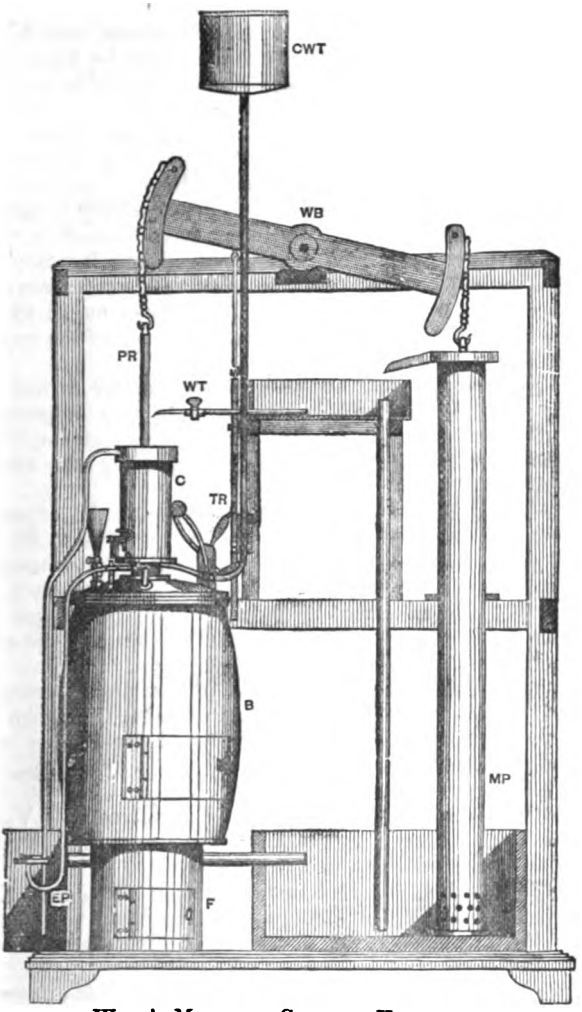

WATT'S MODEL IN GLASGOW UNIVERSITY.

F, for Furnace; B, Boiler, C, Cylinder; PR, Piston rod; WB, Wooden beam; MP, Mine pump; TR, Tappet rod; CWT, Cold-water tank; WT, Water tap for keeping piston tight; EP, Exhaust pipe.

NOTE.—In working to repair the model here represented, James Watt, in 1765, made the discovery of a separate condenser, which has identified his name with the Steam Engine.

Digitized by Google

common fire engines, and which I call the steam vessel, must, during the whole time the engine is at work, be kept as hot as the steam that enters it; first, by enclosing it in a case of wood, or any other materials that transmit heat slowly; secondly, by surrounding it with steam or other heated bodies; and thirdly, by suffering neither water nor any other substance colder than the steam to enter or touch it during that time.

"*Secondly.* In engines that are to be worked wholly or partially by condensation of steam, the steam is to be condensed in vessels distinct from the steam vessels or cylinders, although occasionally communicating with them; these vessels I call condensers; and, while the engines are working, these condensers ought at least to be kept as cold as the air in the neighbourhood of the engines, by application of water, or other cold bodies.

"*Thirdly.* Whatever air or other elastic vapour is not condensed by the cold of the condenser, and may impede the working of the engine, is to be drawn out of the steam vessels or condensers by means of pumps, wrought by the engines themselves, or otherwise.

"*Fourthly.* I intend, in many cases, to employ the expansive force of steam to press on the pistons, or whatever may be used instead of them, in the same manner in which the pressure of the atmosphere is now employed in common fire engines. In cases where cold water cannot be had in plenty, the engines may be wrought by this force of steam only, by discharging the steam into the air after it has done its office.

"*Lastly.* Instead of using water to render the pistons and other parts of the engines air and steam tight, I employ oils, wax, resinous bodies, fat of animals, quicksilver, and other metals in their fluid state."

To start Watt's Single-acting Engine:

First. Blow through, by opening all the valves, V_1, V_2, V_3. This allows the steam from the boiler to expel the air from the cylinder, steam passages, and condenser.

Second. Shut valve, V_2, and open injection cock, I C. This creates a vacuum below the piston, and at the same time brings into play the steam pressure above it, causing the piston to descend.

Third. Close valves V_1 and V_3, and open V_2. This allows the steam which forced down the piston to find its way below it, and thus to create an equal pressure on each side of it, when the weight of the pump-rods, acting on the other end of the beam, brings the piston to the top of the cylinder.

These *second* and *third* operations are repeated automatically by the tappet rod when the engine has been fairly started.

Digitized by Google

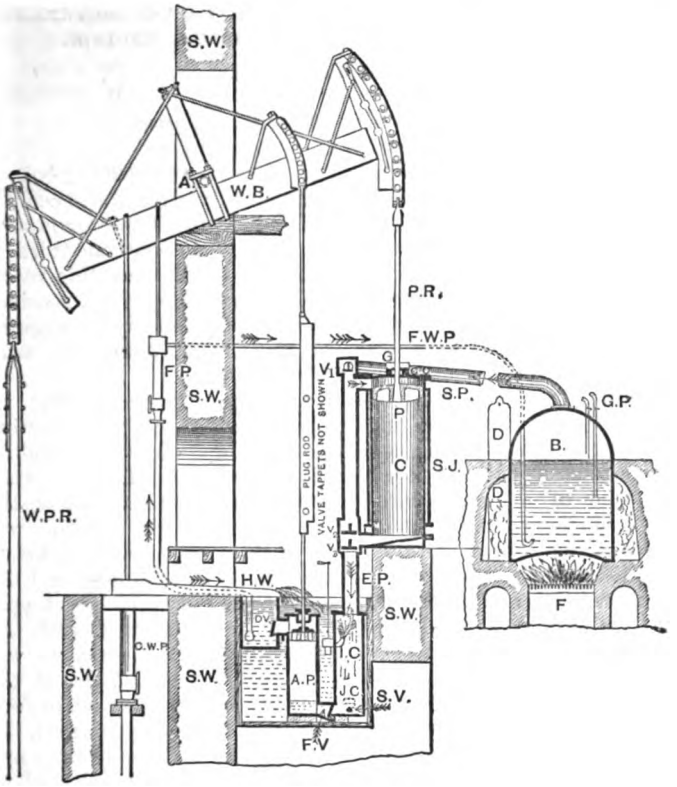

WATT'S SINGLE-ACTING ENGINE.

F	for Furnace.	W B	for Wooden beam.
D	,, Damper.	A	,, Axis.
B	,, Boiler.	W P R	,, Weighted pump-rod down to bottom of mine.
F W P	,, Feed water pipe.		
G P	,, Gauge pipes.	E P	,, Exhaust pipe.
S P	,, Steam pipe.	J C	,, Jet condenser.
V_1	,, Steam valve.	I C	,, Injection cock.
V_2	,, Equilibrium valve.	C W P	,, Cold-water pump.
V_3	,, Exhaust ,,	A P	,, Air pump.
C	,, Cylinder.	S V	,, Snifting valve.
S J	,, Steam jacket.	F V	,, Foot valve.
C C	,, Cylinder cover.	D V	,, Delivery valve.
G	,, Gland and stuffing box.	H W	,, Hot well.
P	,, Piston.	F P	,, Feed pump.
P R	,, Piston rod.	S W	,, Stone work.

Digitized by Google

THE FOLLOWING IS AN ABBREVIATED LIST OF IMPROVEMENTS EFFECTED BY WATT ON SINGLE-ACTING ENGINES.

1. Steam jacket to keep cylinder warm.
2. Separate condenser.
3. Air pump to draw off air and condensed steam.
4. Expansive working of steam in the cylinder.
5. Improved piston, cylinder cover, gland, and stuffing box.
6. Cataract or hydraulic governor for regulating the speed.

By these several improvements, Watt reduced the amount of fuel required to produce a certain power to about one-third of that required in Newcomen's engine. So fully was this recognised, that Watt, in granting licenses to use his engines, received a *third part of the saving of coals* which was made by his engines, when compared with an atmospheric engine, doing the same work with coals of the same quality.

Watt's Cataract Governor.—The cataract governor was invented by Watt, to regulate the speed of his single-acting pumping engines, and is so simple that the student may readily understand it without the aid of a diagram.* This governor consisted of a pump placed in a tank of water below the level of the cylinder, and the plunger of this pump was attached to a long lever. This lever was loaded with a heavy weight on the same side of the fulcrum as the plunger, and the lever projected out on the other side of the fulcrum. The tappet rod, which was worked off the main beam, engaged with the projecting end of this lever when the piston of the engine was travelling downwards, and therefore raised the plunger of the pump. When the piston of the engine began to rise again (due to the opening of the equilibrium valve by the tappet rod), the heavy weight on the same end of the cataract lever as the plunger caused the latter to descend and to force out the water which it had drawn in during its up-stroke. The water was forced out through a small cock, and the time occupied by the pump plunger in its descent depended upon the amount of opening given to this cock, which could be regulated by the attendant. Since the opening of the steam valve of the engine, which caused the down-stroke of the piston, was effected by a rod from the cataract pump lever, the down-stroke of the engine could not take place until the pump plunger had descended sufficiently to open the steam valve. It will therefore be apparent that by regulating the amount of opening of the discharge cock, the pump plunger could be made to descend with any required

* Large wall diagrams illustrating clearly Watt's cataract governor may be had from the Science and Art Department. It is shown at, P, in the following figure.

Digitized by Google

speed, and thus the steam valve of the engine opened any required number of times per minute.

The following diagram illustrates an improved form of Watt's single-acting pumping engine, and the cataract governor

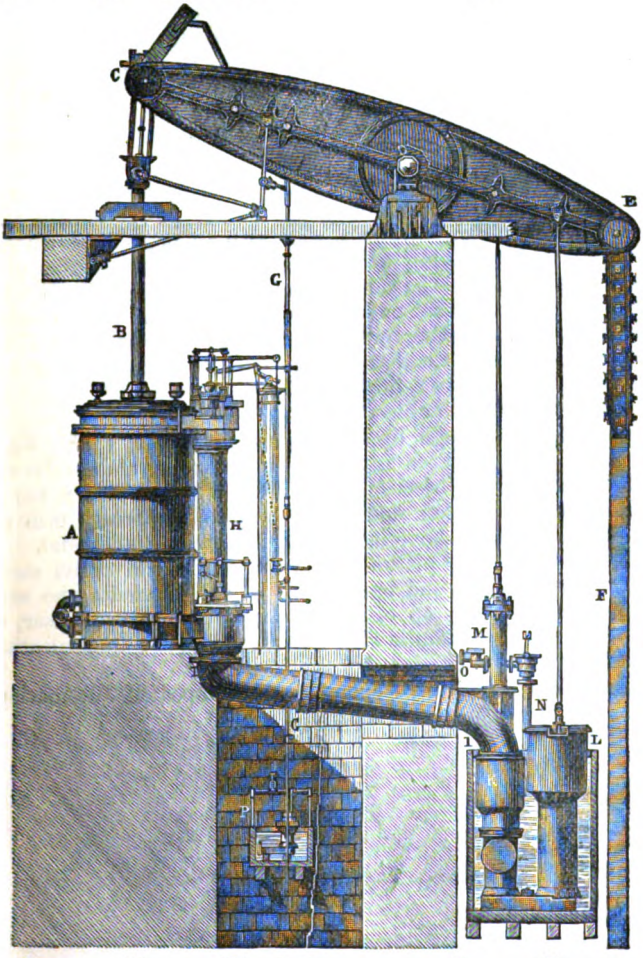

IMPROVED FORM OF WATT'S SINGLE-ACTING PUMPING ENGINE.

NOTE.—The student should make a free-hand sketch of the above figure and write out an index of parts, using the first letter of the names of the parts.

Digitized by Google

Watt's Double-acting Engine.—Hitherto Watt had only introduced steam acting against a piston to press it downwards, thus losing time and the opportunity of taking advantage of the pressure of the steam in the up-stroke to increase the power. In 1782, however, after he had removed from Glasgow to Birmingham, and there joined in partnership with Mr. Boulton, he took out a patent for a "double-acting engine." This engine was freed from the enormous dead weight of counterpoises, which had hung on it from the first attempts of Newcomen, for the purpose of equalising the motion and producing the up-stroke.

Watt says:—"My second improvement upon steam or fire engines, consists in employing the elastic power of the steam to force the piston upwards, and also to press it downwards alternately, by making a vacuum above or below the piston respectively, and, at the same time, employing the steam to act upon the piston in that end, or exerted upon the piston only in one direction, whether upwards or downwards." His 1782 patent engine was considerably improved by his patent of 1784, of which we now give a drawing and description.

To start Watt's Double-acting Engine :—

First. Blow through, by opening all the valves, V_1, V_2, V_3, V_4.

Second. If the piston is at top of cylinder, shut valves, V_2 and V_3, and open injection cock, I C. This creates a vacuum underneath the piston, and at the same time brings into play the steam pressure above it, causing the piston to descend.

Third. When the piston has reached the end of its stroke, shut valves V_1, V_4, and open V_2, V_3. This permits the steam to exhaust from the top of piston direct to the condenser, and at the same time admits steam from the boiler underneath it, causing the piston to *ascend.*

These second and third operations are repeated automatically by means of the plug rod and tappets.

Digitized by Google

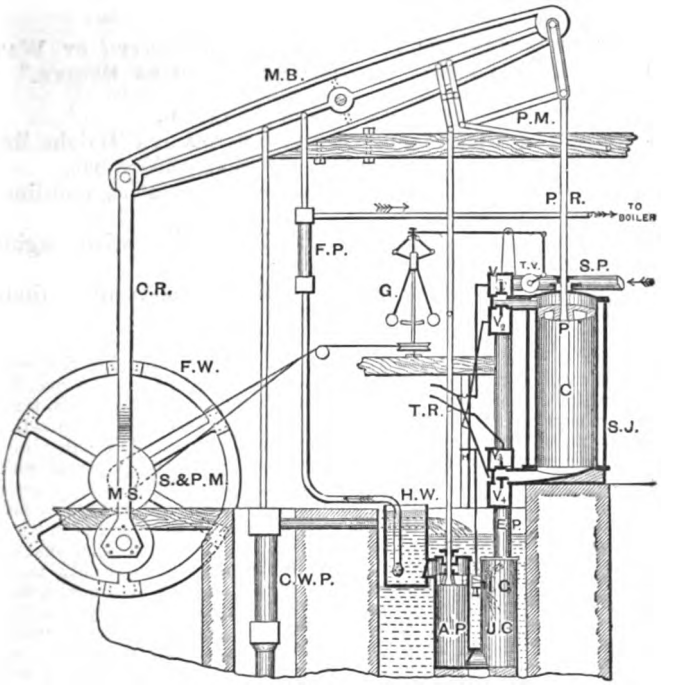

WATT'S DOUBLE-ACTING ENGINE, 1784.

S P	for Steam pipe.	H	for Handle.
T V	,, Throttle valve.	A P	,, Air pump.
G	,, Governor,	H W	,, Hot well.
V_1, V_3,	,, Steam valves connected by a pipe.*	F P	,, Feed pump.
		C W P	,, Cold-water pump.
V_2, V_4,	,, Exhaust valves also connected by a pipe.	P	,, Piston.
		P R	,, Piston rod.
T R	,, Tappet (or plug) rod.	P M	,, Parallel motion.
C	,, Cylinder.	M B	,, Metal beam.
S J	,, Steam jacket.	C R	,, Connecting rod.
E P	,, Exhaust pipe.	S & P M	,, Sun and planet motion.
J C	,, Jet condenser (separate).	M S	,, Main shaft.
I C	,, Injection cock.	F W	,, Fly-wheel.

* In the drawing the steam pipes connecting valves, V_1 and V_3, and the exhaust valves, V_2 and V_4, cannot be fully shown, but it will form a useful exercise for the student to make a section at right angles to the figure through these valves, including all the necessary pipes.

Digitized by Google

List of Improvements introduced or Patented by Watt since the Invention of his "Single-acting Engine."

1. Applying steam on both sides of the piston.
2. Parallel motion to guide the piston rod in a straight line.
3. Metal beam instead of the large clumsy wooden one.
4. Sun and planet motion to convert reciprocating rectilineal to rotative motion.*
5. Governor to regulate the speed of his rotative engines (see index at end for Governors).
6. Indicator to ascertain the pressure of steam in the cylinder (see index at end for Watt's Indicator).

* There can be no doubt that Watt first thought of applying the crank to convert the reciprocating motion of the piston into a rotative one, but, having neglected to take out a patent, the invention was communicated by a workman to the engineer erecting an engine for a Mr. Matthew Washbrough, of Bristol, who patented the application. The following is Watt's own narrative on this subject:—"Among the many schemes which passed through my mind, none appeared so likely to answer the purpose as the application of a crank in the manner of a common turning-lathe (an invention of great merit, of which the humble inventor and even its era are unknown); but, as the rotative motion is produced in that machine by the impulse given to the crank in the descent of the foot only, and is continued in its ascent by the momentum of the wheel, which here acts as a fly; and, being unwilling to load my engine with a fly heavy enough to continue the motion during the ascent of the piston (and even were a counterweight employed to act, during that ascent, on a fly heavy enough to equalise the motion), I proposed to employ two engines, acting upon two cranks, fixed on the same axis, at an angle of 120° to one another, and a weight placed on the circumference of the fly at the same angle to each of the cranks, by which means a motion might be rendered nearly equal, *and a very light fly* would only be requisite."

It is evident Watt did not then appreciate the advantage of a heavy fly-wheel to equalise motion. The application of a fly-wheel to equalise the motion of the piston was first suggested by Fitzgerald before 1772. Watt, on being informed that his idea of applying the crank to steam engines had been patented by another, said—"In these circumstances I thought it [illegible] accomplish the same end by other means, than to enter into litigation, [illegible] the patent, to lay the matter open to everybody."

[illegible] a rotative motion from a rectilineal one, by some [illegible] the crank, Watt introduced what is now called the [illegible] wheels, for which he claimed several advantages over [illegible] rapid velocity of the fly-wheel, the fly-wheel thus [illegible] double the speed that it would in the case of [illegible] not so simple, while its construction makes it [illegible] easily put out of order; it has now universally [illegible] There is a very unique old working model of [illegible] as applied to one of Watt's single-acting [illegible] the end of last century, now in the College [illegible]

Digitized by Google

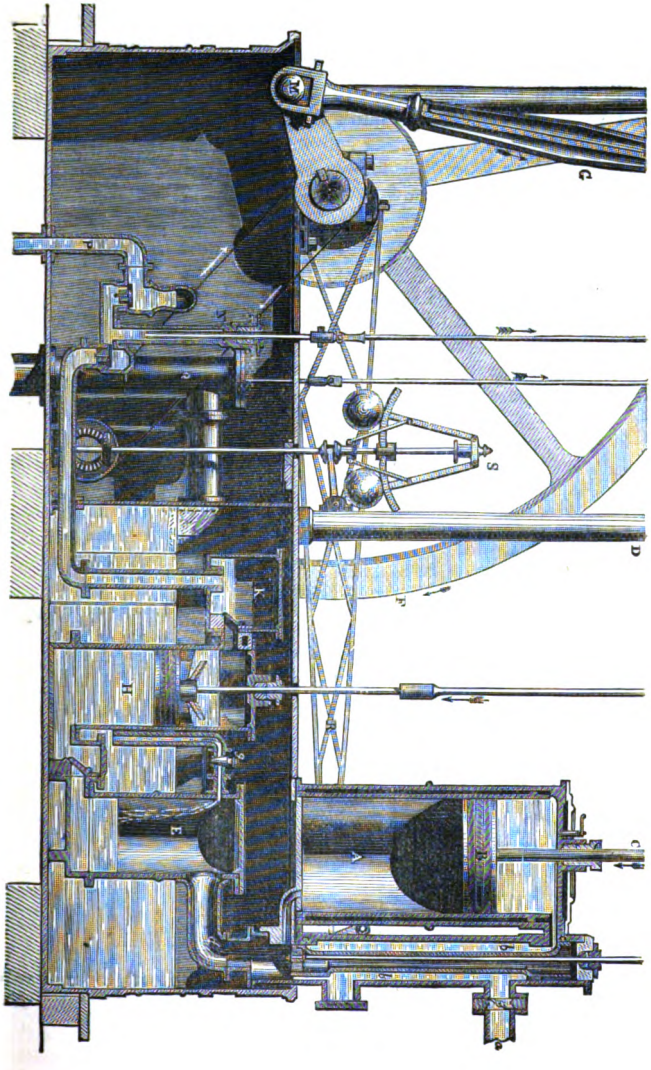

IMPROVED FORM OF WATT'S DOUBLE-ACTING ENGINE.

Digitized by Google

7. Counter for recording the number of strokes of the engine.

8. Mercury U-tube gauges to ascertain the pressure of steam in the boiler as well as the vacuum in the condenser.

An improved form of Watt's double-acting rotatory engine is shown in the preceding illustration; students should compare this with Watt's engine, shown on page 13.

Hornblower's Engine.—Professor Goodeve says:—"There can be no question as to the fact that Watt invented the expansive working of steam, but, technically, he does not stand first in the records of the Patent Office, for he was anticipated by a patent of Hornblower for a single-acting pumping engine, which dates from the year 1781."

Hornblower, in his specification, says—1. "I use two vessels, in which the steam is to act, and which in other steam engines are generally called cylinders.

2. "I employ the steam after it has acted in the first vessel, to operate a second time in the other, by permitting it to expand

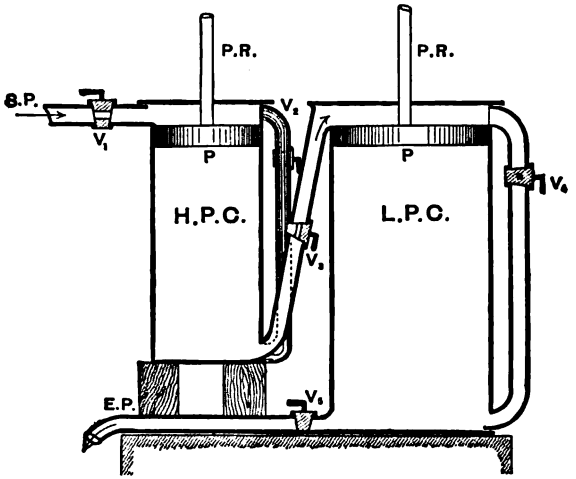

HORNBLOWER'S COMPOUND ENGINE, 1781.*

SP for Steam pipe from boiler.	V_1, V_3 for Steam cocks or valves.
HPC ,, High-pressure cylinder.	V_2, V_4 ,, Equilibrium ,,
LPC ,, Low- ,, ,,	V_5 ,, Exhaust ,,
EP ,, Exhaust pipe to condenser.	

* The drawing is taken from Stuart's *Descriptive History of the Steam Engine*, printed 1825.

Digitized by Google

itself, which I do by connecting the vessels together, and forming proper channels and apertures, whereby the steam shall occasionally go in and out of the said vessels.

3. "I condense the steam by causing it to pass in contact with metallic surfaces, while the water is applied to the opposite side."

To start Hornblower's Engine:—

First. Blow through (to clear all air and gases out of the cylinders and condenser), by opening all the steam and exhaust valves.

Second. Shut valves V_2 and V_4, and turn on the cold water to surface condenser. This creates a vacuum on the lower side of low-pressure piston, and permits the live steam from boiler to press on high-pressure piston, and at the same time the steam from below that piston to act on the low-pressure piston.

Third. Shut valves V_1, V_3, V_5, and open V_2, V_4. This allows the steam which pressed on the top of each piston to flow underneath them, and thus to create equilibrium when the weighted pump-rods pull them to the top again, ready for another start downwards.

It will be quite apparent to students of the present day, that Hornblower had actually devised not only the compound engine, but also the surface condenser (although his engine was but a single-acting one). He erected several engines on his plan, and, probably, the reason why they did not prove more economical than Watt's single-acting engines, was that the pressure of steam which could be generated in the boilers then constructed was too low. He applied to Parliament, in 1792, for an extension of his patent, but was refused; and it is curious to note the severe criticism of early writers on his invention, the principle of which is nowadays so fully recognised.*

The further improvements on the steam engine by Trevithick, Woolfe, M'Naughton, and others, will be noticed within proper place, in connection with locomotive and marine engines.

In order to complete this Early History of the Rise and Progress of the Steam Engine, we here give a list of a few of the more important English patents up to the beginning of this century.

* Stuart, in 1825, writes—"It must always be a subject of regret, that this ingenious man should have wasted the best part of his life, and ruined his fortune in a series of selfish attempts to copy Mr. Watt's inventions, without coming within the letter of his patent."

* See *The Engineer*, January 28, 1887, p. 70, for a letter discussing the above.

Digitized by Google

Chronological List of Early Patents.

For Improvements on the Steam Engine, and for Saving Fuel by the Construction of the Fire-Place and Boiler.

1698.

Thomas Savery, London.

Raising water by the elasticity of steam—Forming vacuum by condensing steam, to raise water by pressure of atmosphere.

1705.

Thomas Newcomen, John Cawley, Dartmouth, and Thomas Savery, London.

Condensing the steam introduced under a piston, and producing a reciprocating motion by attaching it to a lever.

1769.

James Watt, Glasgow.

Invention of the condenser—Use of oil and tallow instead of water—Enclosing cylinder in steam jacket—Moving piston by steam against a vacuum—Steam wheel.

1778.

Matthew Washbrough, Bristol.

Rotative from rectilineal motion.

1781.

John Steed, Lancashire.

Crank movement.

Jonathan Hornblower, Penryn.

Two cylinders.

1782.

James Watt, Birmingham.

Expansive engine—Six contrivances for regulating motion — Double impulse engine—Two cylinders—Toothed rack and sector to piston rod and beam—Semi-rotative engine—Steam wheel.

1784.

James Watt, Birmingham.

Rotative engine—Three parallel motions—Portable steam engine, and machinery for moving wheel carriages—Mode of working hammers and stampers — Improved hand gear—Mode of opening valves.

1785.

James Watt, Birmingham.

Furnace for consuming smoke.

1798.

Jonathan Hornblower, Penryn.

Rotative engine.

1802.

Richard Trevithick and Alexander Vivian, Cornwall.

High-pressure engine.

1804.

Arthur Woolfe, London.

Two cylinders and high-pressure steam boiler.

1805.

James M'Naughton, London.

Saving fuel.

Digitized by Google

LECTURE II.—QUESTIONS.

All sketches to be done free-hand.

1. Make an outline sketch of the cylinder, piston, and valves connected therewith, in Newcomen's engine; and by the side of it make a second drawing of the cylinder, piston, and valves, as altered by Watt. State briefly the nature of these alterations, and mention the additional parts necessary for the working of Watt's engine, but not shown in your drawing.

2. Explain, with a sketch, Watt's invention of a separate condenser and air pump, as applied to a single-acting steam engine. State the several improvements effected by Watt on Newcomen's engine.

3. What is the principle of the single-acting engine? Draw an outline section through the cylinder and valves, &c. Name the valves and explain their action, also the order of opening and shutting them when starting the engine.

4. In improving the old atmospheric engine, Watt laid down the rule that the cylinder in which the steam did its work should be kept as hot as the steam which entered it. What special provisions did he make for carrying out this rule? Explain your answer by referring to such sketches as may be required.

5. Name the three principal valves connected with the steam cylinder of a single-acting pumping engine. State which are opened and which closed—(1) when the piston is at the top of the cylinder and beginning to descend; (2) when the piston is at the bottom of the cylinder and beginning to ascend.

6. Describe, by a sketch and index of parts, Watt's double-acting engine, and point out the distinction between a single-acting and a double-acting engine. What is the object of the equilibrium valve in a single-acting engine? During what portion of the stroke is this valve open?

7. Enumerate the improvements introduced by Watt into his double-acting steam engine in 1784. Why is this engine so much more economical in steam than the old atmospheric engine?

8. Sketch a section through the cylinders of Hornblower's engine; give index of parts, and state how it is started. Why was the high-pressure cylinder of shorter stroke than the low-pressure one? Wherein is it an improvement on Watt's single-acting engine?

9. Make a vertical transverse section through the nozzles and valves of a Cornish pumping engine, showing the positions of the stop or regulating, steam, equilibrium, and exhaust valves respectively, together with the ports of the cylinder and the passages for the distribution of steam. (*Adv. S. and A. Exam.*, 1889.)

Digitized by Google

LECTURE III.

CONTENTS.—Temperature, Thermometry, Pyrometers.

IT is necessary at the very outset of this section of our subject, to clearly understand what is meant by the different expressions:

1. The *temperature* of a body.
2. The *quantity of heat* in a body, and the *unit of heat.*
3. The *capacity for heat*, and the *specific heat* of a body.

Temperature.—*The temperature of a body is its thermal state considered with reference to its power of communicating heat to other bodies* (MAXWELL).

Two bodies are said to be at the *same* temperature, if, when placed in thermal communication, there is *no* tendency to the transfer of heat between them; if, however, one of them loses heat, and the other gains heat, that body which *gives out* heat, is said to have a *higher* temperature than that which receives heat.

Temperature, therefore, indicates the *quality* or *condition* of the heat in bodies, and is capable of greater or less intensity according to circumstances. It is measured by Thermometers and Pyrometers.

Thermometry.—Thermometry is the method of ascertaining temperatures, or the intensities of heat. The action of thermometers is based on the change of volume, to which bodies are subject with a change of temperature. Air, water, spirit, and mercurial thermometers are severally used under different circumstances, but the mercurial thermometer is the one most commonly employed by engineers. The mercurial thermometer consists of a stem or tube of glass, formed at one end into a bulb, to contain the mercury which expands into the tube. If the stem be of uniform bore, the expansion of the mercury being practically equal for equal increments of temperature, it follows that, if the scale be uniformly graduated, the divisions will indicate equal increments of temperature.*

It was early ascertained that the freezing and the boiling points

* For a complete description of the different kinds of thermometers, their construction, calibration, graduation, and use, see Professor Maxwell on "Heat," published by Longman & Co., Text Book of Science Series, Professor Tait on "Heat," published by Macmillan & Co.

Digitized by Google

of water at the normal pressure of the atmosphere (viz., 14·7 lbs. on the square inch), were constant temperatures, and advantage is taken of this physical property in order to graduate thermometers. The interval between these two fixed temperatures is in the case of the Fahrenheit thermometer (the one commonly used by English engineers) divided into 180 equal parts, termed degrees; in case of the Centigrade,* or standard French thermometer, into 100 equal parts, and in the Réaumur, or the thermometer used in Germany, Russia, &c., into 80 parts. The following comparative scale will render this quite clear:—

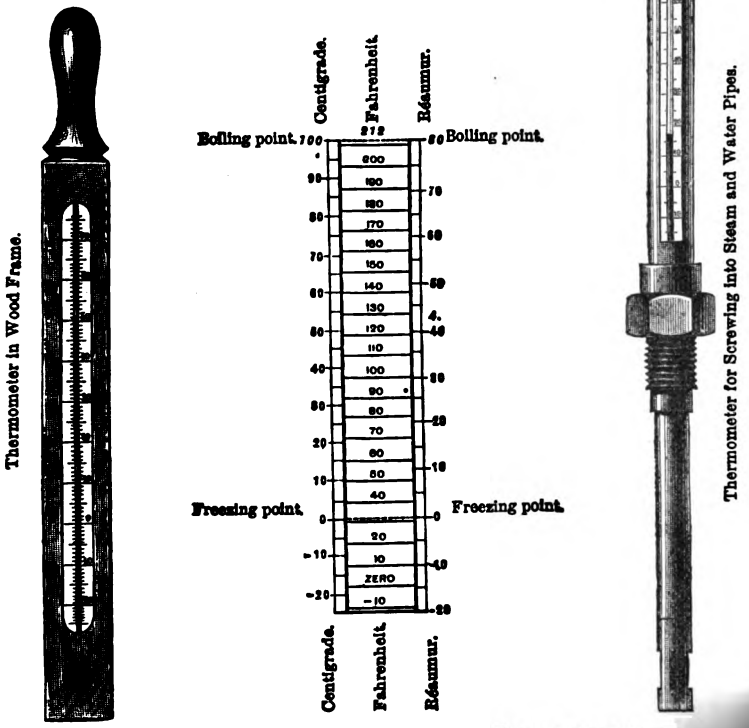

SCHAFFER AND BUDENBERG'S ENGINEER THERMOMETERS.

* The Centigrade thermometer is now used as the standard thermometer by all the best physicists, and students should familiarise themselves with readings taken by it, as well as with constants and tables to that scale.

Digitized by Google

COMPARISON OF DIFFERENT THERMOMETERS.

Fah.	Cent.	Réau.	Fah.	Cent.	Réau.
392	200	160	320	160	128
390·20	199	159·20	318·20	159	127·20
388·40	198	158·40	316·40	158	126·40
386·60	197	157·60	314·60	157	125·60
384·80	196	156·80	312·80	156	124·80
383	195	156	311	155	124
381·20	194	155·20	309·20	154	123·20
379·40	193	154·40	307·40	153	122·40
377·60	192	153·60	305·60	152	121·60
375·80	191	152·80	303·80	151	120·80
374	190	152	302	150	120
372·20	189	151·20	300·20	149	119·20
370·40	188	150·40	298·40	148	118·40
368·60	187	149·60	296·60	147	117·60
366·80	186	148·80	294·80	146	116·80
365	185	148	293	145	116
363·20	184	147·20	291·20	144	115·20
361·40	183	146·40	289·40	143	114·40
359·60	182	145·60	287·60	142	113·60
357·80	181	144·80	285·80	141	112·80
356	180	144	284	140	112
354·20	179	143·20	282·20	139	111·20
352·40	178	142·40	280·40	138	110·40
350·60	177	141·60	278·60	137	109·60
348·80	176	140·80	276·80	136	108·80
347	175	140	275	135	108
345·20	174	139·20	273·20	134	107·20
343·40	173	138·40	271·40	133	106·40
341·60	172	137·60	269·60	132	105·60
339·80	171	136·80	267·80	131	104·80
338	170	136	266	130	104
336·20	169	135·20	264·20	129	103·20
334·40	168	134·40	262·40	128	102·40
332·60	167	133·60	260·60	127	101·60
330·80	166	132·80	258·80	126	100·80
329	165	132	257	125	100
327·20	164	131·20	255·20	124	99·20
325·40	163	130·40	253·40	123	98·40
323·60	162	129·60	251·60	122	97·60
321·80	161	128·80	249·80	121	96·80

Digitized by Google

COMPARISON OF DIFFERENT THERMOMETERS—*Continued.*

Fah.	Cent.	Réau.	Fah.	Cent.	Réau.
248	120	96	192	88·8	71·1
246·20	119	95·20	191	88·3	70·6
244·40	118	94·40	190	87·7	70·2
242·60	117	93·60	189	87·2	69·7
240·80	116	92·80	188	86·6	69·3
239	115	92	187	86·1	68·8
237·20	114	91·20	186	85·5	68·4
235·40	113	90·40	185	85·0	68·0
233·60	112	89·60	184	84·4	67·5
231·80	111	88·80	183	83·8	67·1
230	110	88	182	83·3	66·6
228·20	109	87·20	181	82·7	66·2
226·40	108	86·40	180	82·2	65·7
224·60	107	85·60	179	81·6	65·3
222·80	106	84·80	178	81·1	64·8
221	105	84	177	80·5	64·4
219·20	104	83·20	176	80·0	64·0
217·40	103	82·40	175	79·4	63·5
215·60	102	81·60	174	78·8	63·1
213·80	101	80·80	173	78·3	62·6
...	...	...	172	77·7	62·2
212	100·0	80·0	171	77·2	61·7
211	99·4	79·6	170	76·6	61·3
210	98·9	79·1	169	76·1	60·8
209	98·3	78·7	168	75·5	60·4
208	97·8	78·2	167	75·0	60·0
207	97·2	77·8	166	74·4	59·5
206	96·7	77·3	165	73·8	59·1
205	96·1	76·9	164	73·3	58·6
204	95·6	76·4	163	72·7	58·2
203	95·0	76·0	162	72 2	57·7
202	94·4	75·6	161	71·6	57·3
201	93·9	75·1	160	71·1	56·8
200	93·3	74·7	159	70·5	56·4
199	92·8	74·2	158	70·0	56·0
198	92·2	73·8	157	69·4	55·5
197	91·7	73·3	156	68·8	55·1
196	91·1	72·9	155	68·3	54·6
195	90·6	72·4	154	67·7	54·2
194	90·0	72·0	153	67·2	53·7
193	89·4	71·5	152	66·6	53·3

Digitized by Google

COMPARISON OF DIFFERENT THERMOMETERS—*Continued.*

Fah.	Cent.	Réau.	Fah.	Cent.	Réau.
151	66·1	52·8	111	43·8	35·1
150	65·5	52·4	110	43·3	34·6
149	65·0	52·0	109	42·7	34·2
148	64·4	51·5	108	42·2	33·7
147	63·8	51·1	107	41·6	33·3
146	63·3	50·6	106	41·1	32·8
145	62·7	50·2	105	40·5	32·4
144	62·2	49·7	104	40·0	32·0
143	61·6	49·3	103	39·4	31·5
142	61·1	48·8	102	38·8	31·1
141	60·5	48·4	101	38·3	30·6
140	60·0	48·0	100	37·7	30·2
139	59·4	47·5	99	37·2	29·7
138	58·8	47·1	98	36·6	29·3
137	58·3	46·6	97	36·1	28·8
136	57·7	46·2	96	35·5	28·4
135	57·2	45·7	95	35·0	28·0
134	56·6	45·3	94	34·4	27·5
133	56·1	44·8	93	33·8	27·1
132	55·5	44·4	92	33·3	26·6
131	55·0	44·0	91	32·7	26·2
130	54·4	43·5	90	32·2	25·7
129	53·8	43·1	89	31·7	25·3
128	53·3	42·6	88	31·1	24·8
127	52·7	42·2	87	30·5	24·4
126	52·2	41·7	86	30·0	24·0
125	51·6	41·3	85	29·4	23·5
124	51·1	40·8	84	28·8	23·1
123	50·5	40·4	83	28·3	22·6
122	50·0	40·0	82	27·7	22·2
121	49·4	39·5	81	27·2	21·7
120	48·8	39·1	80	26·6	21·3
119	48·3	38·6	79	26·1	20·8
118	47·7	38·2	78	25·5	20·4
117	47·2	37·7	77	25·0	20·0
116	46·6	37·3	76	24·4	19·5
115	46·1	36·8	75	23·8	19·1
114	45·5	36·4	74	23·3	18·6
113	45·0	36·0	73	22·7	18·2
112	44·4	35·6	72	22·2	17·7

Digitized by Google

COMPARISON OF DIFFERENT THERMOMETERS—*Continued.*

Fah.	Cent.	Réau.	Fah.	Cent.	Réau.
71	21·6	17·3	51	10·5	8·4
70	21·1	16·8	50	10·0	8·0
69	20·5	16·4	49	9·4	7·5
68	20·0	16·0	48	8·8	7·1
67	19·4	15·5	47	8·3	6·6
66	18·8	15·1	46	7·7	6·2
65	18·3	14·6	45	7·2	5·7
64	17·7	14·2	44	6·6	5·3
63	17·2	13·7	43	6·1	4·8
62	16·6	13·3	42	5·5	4·4
61	16·1	12·8	41	5·0	4·0
60	15·5	12·4	40	4·4	3·5
59	15·0	12·0	39	3·8	3·1
58	14·4	11·5	38	3·3	2·6
57	13·8	11·1	37	2·7	2·2
56	13·3	10·6	36	2·2	1·7
55	12·7	10·2	35	1·6	1·3
54	12·2	9·7	34	1·1	0·8
53	11·6	9·3	33	0·5	0·4
52	11·1	8·8	32	0·0	0·0

It is certainly a great inconvenience to have to convert readings taken in one scale to that of another, but students should thoroughly master the simple proportion that exists between the different scales, so as to be independent of conversion tables.

Since the temperature of freezing water, or melting ice, is marked on the different scales as follows—

Fah.	Cent.	Réau.
32°	0°	0°

and the boiling point of water—

Fah.	Cent.	Réau.
212°	100°	80°

we obtain the proportion that exists between the scales by subtracting the freezing from the boiling points, thus—

Fah.	Cent.	Réau.
180°	100°	80°

Digitized by Google

Now, to convert a reading observed on the one scale to its corresponding value on either of the others—

Let F = Temperature Fahrenheit.
C = „ Centigrade.
R = „ Réaumur.

Then we observe that we must *subtract* 32° from the Fah. scale *before* applying the above proportion in converting it to the Cent. or to the Réau., but *add* 32, *after* applying the above proportion, in converting either the Cent. or the Réau. into the Fah. scale, as follows—

$$(F - 32) : C : R :: 180 : 100 : 80$$

or as 9 : 5 : 4

$$\therefore \text{ Degrees } C = \frac{(F - 32)\ 5}{9}$$

$$\text{„ } \quad R = \frac{(F - 32)\ 4}{9}$$

$$\text{„ } \quad F = \frac{C \times 9}{5} + 32$$

$$\text{„ } \quad F = \frac{R \times 9}{4} + 32.$$

EXAMPLES.—Suppose the temperature of the feed water for a boiler is 102° Fah., find the corresponding temperature on the Cent. and Réau. scales:

By proportion— $9 : 5 :: (F - 32) : C$

$$\therefore C = \frac{(F - 32)\ 5}{9} = \frac{(102 - 32)\ 5}{9}$$

$$= \frac{70 \times 5}{9} = \frac{350}{9} = 38°{\cdot}8 \text{ Cent.}$$

Again— $9 : 4 :: (F - 32) : R$

$$\therefore R = \frac{(F - 32)\ 4}{9} = \frac{(102 - 32)\ 4}{9} = \frac{280}{9} = 31°{\cdot}1 \text{ Réau.}$$

Suppose the temperature of the hot well is 80° Cent., what is this on the Fah. and Réau. scales?

Digitized by Google

By proportion— $5 : 9 :: C : (F - 32)$

$$\therefore F = \frac{C \times 9}{5} + 32 = \frac{80 \times 9}{5} + 32$$

$$= \frac{720}{5} + 32 = 144 + 32 = 176^\circ \text{ Fah.}$$

Again— $5 : 4 :: C : R$

$$\therefore R = \frac{C \times 4}{5} = \frac{80 \times 4}{5} = 64^\circ \text{ Réau.}$$

Note.—We shall treat of the "absolute zero" of the thermometric scale when we come to pressure and volume of gases.

Pyrometers* are employed to measure temperatures above the boiling point of mercury (about 676° Fah.); for example, the temperature of a furnace, or the waste gases in a chimney. Their action depends upon the change of form of either solid or gaseous bodies, liquids being necessarily inadmissible.

Pyrometric estimations are of three classes :—

First. Those of which the indications are based upon the change of the dimensions of a particular body, solid or gaseous —the pyrometer proper.

Second. Those based on the quantity of heat imparted to a known weight of water, by immersing in the water a body of known weight, that has previously been raised to the temperature which it is required to determine.

Third. Those which are based on the melting points of metals and metallic alloys.

1. Of the first class we have Wedgewood's pyrometer, invented in 1782, founded on the property possessed by clay, of contracting at high temperatures. He made a tapered groove of metal, so arranged, that the clay, when rolled or pressed into the form of a small cylinder, just fitted, or entered the groove, if raised to a low redness, but as it was increased in temperature it shrank and could be slipped further along the tapered groove. He divided the tapered groove into degrees Fah. Unfortunately, it has been found that the contraction of the clay is not exactly proportional to the increase of temperature.

Daniell's pyrometer depends on the expansion of a metal bar enclosed in a black-lead case. This case is drilled out 7·5 inch[illegible] deep to a diameter say of ·3 inch. A rod of platinum, [illegible]

* For these notes on pyrometers we are indebted to D. K. [illegible] cellent *Rules, Tables, and Data*, published by Messrs. Blackie & S[illegible]

Digitized by Google

iron, a little less than the bore, and about an inch shorter, is inserted into the black-lead case, and surmounted by a porcelain index. When the whole instrument is placed in a furnace, the greater expansion of the metal as compared with that of the black-lead, presses forward the index, which remains at the furthest position, so that, when removed, it registers the highest temperature to which it was subjected.* None of these methods, as yet constructed on this principle, are very accurate.

2. Of the second means of estimating higher temperatures, one of the best is that known as Wilson's water pyrometer. The inventor places in the fire or heated chamber, a known weight of platinum, in the form of a thin cylinder, until it has assumed the temperature thereof. He then takes it out, and plunges it quickly into a vessel containing water exactly twice the weight of the platinum, and observes the rise in temperature of the water, when the temperature of the chamber or fire is found by the following simple rule—"Multiply the rise in temperature of the water by a constant, 62, and add the final temperature of the water." The way in which this rule is found will be fully explained in our next lecture, when we come to treat of specific heat. In Siemens' Water Pyrometer copper cylinders are used instead of platinum; the principle and method of using it are the same (see Appendix II.)

3. The third method of estimating high temperatures, viz., that based on the melting points of metals or metallic alloys, is applied by simply suspending in the heated chamber or furnace a small piece of metal, the melting point of which is known, and, if necessary, two or more pieces of different melting points, so as to ascertain the temperature within certain limits, according to the pieces which are melted, and those which remain unmelted. This is the rough and ready method most frequently adopted by workmen in iron, steel, and other smelting works.†

* For a description of air pyrometers and thermometers, see Professor Maxwell on "Heat," Professor Tait on "Heat," and also Sir Wm. Thomson's article on "Heat," *Encyclopædia Britannica*, 9th edition.

† Based on the well-known law of the increase in electrical resistance of metals with an increase of temperature, a tolerably accurate and very interesting pyrometer was devised by the late Sir William Siemens, in 1871. See *Proceedings of The Royal Society*, 1871, and *Proceedings of the Society of Telegraph Engineers*, vol. i., p. 123, also Appendix II. to this Book.

Digitized by Google

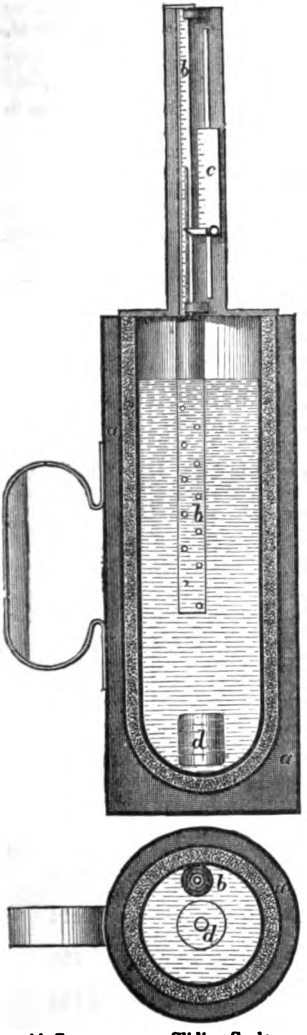

a. Air Space. c, Sliding Scale.
b. Thermometer. d, Metal Cylinder.

SIEMENS'
WATER PYROMETER.

Description.—This Pyrometer, which is shown in the accompanying sketch (in vertical and horizontal sections), consists of two cylindrical copper vessels having an air space, *a*, between them. The inner vessel is constructed, with a view to prevent radiation, of a double casing of copper with an intermediate packing of felt, and is of sufficient size to hold rather more than a pint of water.

A mercurial thermometer, *b*, is fixed against one side of the inner vessel and protected by a perforated tube. The upper half of the thermometer projects above the copper vessel and is graduated in the ordinary degrees, Fahrenheit or Centigrade, while by the side of it is a small brass sliding scale, *c*, graduated and figured with degrees of the same denomination as the thermometer.

Cylinders, *d*, of copper, iron, or platinum are provided with each Pyrometer, their size being accurately adjusted so that the capacity for absorbing heat between 0° and 100° C. is equal to one-fiftieth of that of the vessel and pint of water which it contains; as however this capacity (specific heat) increases with the temperature, the divisions on the sliding scale expand with rise in temperature and in a different ratio for the three metals specified, thus necessitating a special sliding scale for each metal of which the cylinders are composed.

Instructions.—The temperature of a furnace, &c., is ascertained in the following manner:—

A pint (0·568 litre or 34·66 cubic inches) of clean water is placed in the Pyrometer vessel, and, after this has stood for a few minutes, the zero point of the sliding scale is set at the temperature indicated by the thermometer.

One of the metal cylinders, [illegible] exposed from two to ten minutes, [illegible] heat to be measured and allowed

Digitized by Google

in it until it has acquired its temperature. It is then quickly withdrawn and dropped into the water, the temperature of which rises gradually until a maximum is reached. *This rise of temperature, as indicated by the sliding scale, added to the temperature of the water at the end of the experiment, gives that of the furnace, &c.*

The range of the Pyrometer with copper and iron cylinders extends to 1000° C. or 1800° F., but with platinum cylinders to 1500° C., or 2700° F.

Cylinders of copper are found to be most suitable for general use in ascertaining the temperature of ordinary furnaces, while for very high temperatures those of platinum are alone available. Wrought-iron cylinders are sometimes employed, as they offer an advantage over those of copper in having a higher melting point, and being less liable to alteration in weight through loss by incrustation when plunged at a high temperature into water; this advantage may however be considered as counter-balanced by the fact that copper is much less affected by the corrosive action of the gaseous products of combustion; for the reasons just given, platinum cylinders offer still further advantages.

The normal weights of the metal cylinders are as follows:—

Copper, ...	137	grammes.
Wrought-iron, ...	112	,,
Platinum, ...	402·6	,,

As the copper cylinders gradually decrease in weight, depending on the frequency of use, a table is added below which gives for the diminished weights the coefficient by which the temperature indicated on the sliding scale is to be multiplied.

TABLE OF CORRECTIONS FOR THE DECREASE IN WEIGHT OF THE COPPER CYLINDERS.

Weight of Copper Cylinder in grammes.	Multiplier for the indications of the sliding scale.	Weight of Copper Cylinder in grammes.	Multiplier for the indications of the sliding scale.	Weight of Copper Cylinder in grammes.	Multiplier for the indications of the sliding scale.
137	1·000	131	1·046	125	1·096
136	1·007	130	1·054	124	1·105
135	1·015	129	1·062	123	1·114
134	1·022	128	1·070	122	1·123
133	1·030	127	1·078	121	1·132
132	1·038	126	1·087	120	1·142

Digitized by Google

Sir William Siemens' Electrical Pyrometer.—The electrical resistance of metallic conductors depends upon their dimensions, material, and temperature. An increase of the latter causes a corresponding increase of resistance, the law of which is known. Thus the resistance of a conductor having been ascertained at 0° Centigrade it can be calculated for higher temperatures; and, *vice versâ*, as the resistance can be found by measurement the temperature can be calculated. This is the principle upon which Siemens' Electrical Pyrometer is based.

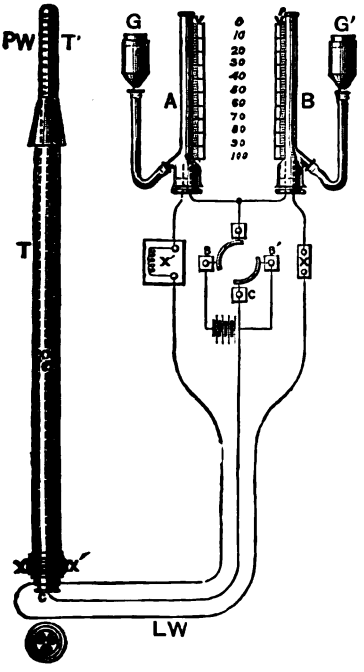

DIAGRAM OF CONNECTIONS FOR SIR WILLIAM SIEMENS' ELECTRICAL PYROMETER.

A platinum wire, **PW**, contained in the tube, **T'** (see first Figure), of a known resistance at 0° Centigrade is coiled on a cylinder of fire-clay so that the convolutions do not touch one another. This coil is protected by a platinum shield, which is placed in an iron or platinum tube, **XT'**. Leading wires, **LW**, are arranged to connect the platinum wire coil, **PW**, with an instrument suitable for measuring its varying resistance, from which the temperature can be calculated.

The instrument supplied for measuring the resistance is a Differential Voltameter (see also second Figure), which consists of two separate glass tubes, **A** and **B**, in each of which a dilute mixture of sulphuric acid and water is decomposed by an electrical current passing between two platinum electrodes immersed in the liquid. The gas which is generated is collected in the upper portion of these carefully calibrated tubes, and its quantity is read off by means of a graduated scale fixed behind the tubes.

Movable reservoirs **G** and **G'** communicating with the tubes, **A** and **B**, regulate the level of the liquid. The current from the battery is divided by a commutator B, B' (see first Figure), fixed on the wooden baseboard into two circuits, one of which consists of a constant resistance, **X'**, in the instrument and the platinum electrodes in one tube; the other, **X**, of the resistance to be measured and the electrodes in the other tube. The quantities of gas developed in the two tubes are in inverse proportion to the resistances of their respective circuits, and the resistance in the instrument being known, the other can be calculated.

Digitized by Google

Directions for use.—Fill the battery glasses, I|I|, with pure water, or, in case of the electrical pressure of the battery decreasing, with a solution of sal-ammoniac in water. Connect the poles to B and B′ on the commutator. Expose the small end of the pyrometer-tube at, T′, as far as the cone, to the heat to be measured, and connect the terminals, X, X′, C, to the ends of the leading cable bearing the corresponding letters. Connect the other end of the leading cable to the terminals, X, X′, C, on the Voltameter.

The Differential Voltameter is to be filled with the diluted sulphuric acid through the reservoirs, G and G′, the india-rubber cushions being lifted from the top of the tubes by means of the double bell-crank lever, K. The commutator, B, B′, is to be turned so that the contact springs on both sides rest on the ebonite. The liquid in both tubes, A and B, is to be regulated to the same level (0° of scale) by raising or lowering the movable reservoirs, and the india-rubber cushions are then let down again. Give the commutator a quarter of a turn, and the development of gas will commence almost immediately. Turn the commutator half round every ten seconds to reverse the current. Keep the current passing until the liquid has fallen in the tubes to at least 50° of the scale, then put the commutator in its first position, so that the contact springs rest on the ebonite, lower the reservoirs until the liquid stands at the same level in each reservoir and its corresponding tube; read off the level of the liquids on the scale marked V, and the scale marked V′; then on the slide rule supplied with the instrument set the reading on V′, opposite the reading on V, and the temperature in degrees centigrade will be indicated by the arrow on the slide. For a new experiment adjust the levels to zero as before.

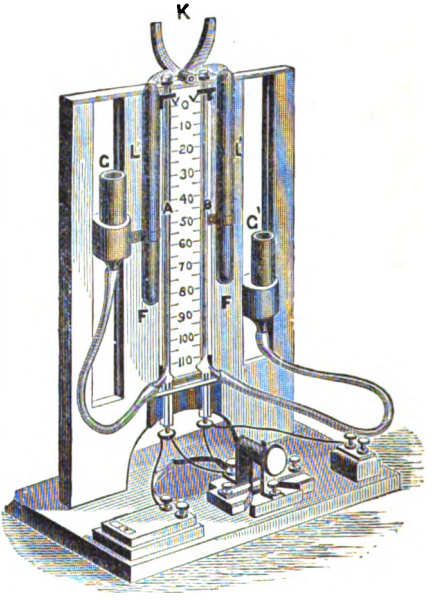

General View of Voltameter and Commutator for Sir William Siemens' Electrical Pyrometer.

The slide rule gives temperatures up to 1400° C., if the measurement of higher temperatures is desired, it is necessary that the tube, T′, should be of platinum instead of iron, and the temperatures can be calculated by the subjoined formula—

Digitized by Google

$$T^\circ \text{ Centigrade} = \left[\left\{ \frac{1\cdot9}{\beta} \times \frac{V}{V^1} - \frac{0\cdot2 + \gamma}{\beta} + \frac{\alpha^2}{4\beta^2} \right\}^{\frac{1}{2}} - \frac{\alpha}{2\beta} \right]^2 - 274^\circ$$

where $\alpha = \cdot039369$; $\frac{1\cdot9}{\beta} = 877{,}975$; $-\frac{0\cdot2 + \gamma}{\beta} = +19\cdot070544$

$\beta = \cdot00216407$;

$\gamma = -\cdot24127$; $\log \frac{1\cdot9}{\beta} = 2\cdot9434822$; $\frac{\alpha^2}{4\beta^2} = 82\cdot738226$

$\frac{\alpha}{2\beta} = 9\cdot0960553.$

Instructions for the use of the Voltameter.—1. The Voltameter tubes should be filled with a mixture of fifteen parts of distilled water and one part of pure sulphuric acid. Ordinary water and impure acid or acid of too great a strength should be avoided, as they cause deposits inside the tubes, which produce adherent gas bubbles and thus influence the correctness of the reading. Should such deposits be formed, the tubes must be well cleaned before further use.

2. Four cells of the battery, when new, give a suitable current, but the other two cells should be added when the first are weakened through use. Currents, if too strong and irregular, form gas bubbles which separate the liquid in the tube.

3. The Commutator of the Voltameter, when the current is passing, should be reversed about every ten seconds.

4. Care should be taken that the corks carrying the platinum points are so arranged that the points stand perfectly clear of the narrow ends of the glass tubes, and that the distance between the wires in each pair is as neary equal as possible.

5. The india-rubber cushions at the top of the fixed tubes should have a thin layer of "*Resin cerate*" or tallow on their lower surfaces in order to make the joint as gas-tight as possible.

6. Should adherent gas bubbles occur in spite of these precautions, they can be removed by lowering the sliding reservoirs, squeezing the india-rubber tubing, or suddenly reversing the commutator.

7. Before taking the final reading of the tubes, V and V′, each sliding tube must be lowered until the level of the liquid in it and its corresponding fixed tube is at the same height, so as to obtain an equal pressure on the gas in each tube.

Lecture III.—Questions.

1. Define the temperature of a body. What two natural phenomena have been employed to determine two points of reference in the scale of thermometers? And why?

2. Compare the Fah., Cent., and Réau. scales. A Cent. thermometer indicates 15°; show by proportion (in full) how you find what are the corresponding readings in the Fah. and Réau. scales. *Ans.* 59° F.; 12° R.

3. Zinc boils at 1204° F., mercury at 676° F.; change these readings to Cent. (show your work in full). *Ans.*, 651° C., and 358° C.

4. Suppose you were requested to find the temperatures in the fire box and chimney of a locomotive, or in the furnace and uptake of a marine boiler funnel, how would you do it? Give arithmetical examples in each case.

Digitized by Google

LECTURE IV.

CONTENTS.—Quantity of Heat—Unit of Heat—Calorimetry—Capacity for Heat—Specific Heat—Table of Specific Heats of Substances.

Quantity of Heat.—Calorimetry is the method of measuring quantities of heat. When heat is applied to a body it produces various effects. For example, in most instances it raises the temperature of the body, it generally alters its volume or its pressure, and in certain cases it changes the state of the body from solid to liquid, or liquid to gaseous.

To be able to compare different quantities of heat, we must first fix on a standard or unit of heat. This is done by selecting a standard body, and noting the effects of heat upon it. For example, we might take a pound or other known weight of ice at its freezing or melting point, 32° F. or 0°C., and apply heat to it, until it all melts into water at the same temperature. This would give a definite standard, by which to compare other quantities of heat applied in the same way. This method was actually adopted by Lavoisier in his ice calorimeter. Or, we might take a known weight of water at its boiling point, and apply heat to it until it all becomes converted into steam at the same temperature as the boiling water. This method is used in determining the quantity of heat obtained from different kinds of coal. We often find it stated in connection with trials of steam boilers, that so many pounds of water were converted into steam at a certain pressure per pound of coal of a certain quality.

Unit of Heat.—The standard unit now adopted in this country is called * *The British Thermal Unit, and is the quantity of heat required to raise* 1 *lb. of water by* 1° *Fah., when at its maximum density,* i.e., *from* 39°·1 *to* 40°·1 *Fah.*

* The words "British Thermal Unit" are often represented by the notation, B T U, or, shortly, T U. Mr. William Anderson, M. Inst. C.E., in his Howard Lectures "On the Conversion of Heat into Useful Work," delivered before the Society of Arts, London, April to June, 1885, simply uses the small letter, *u*. For example, we find in his lectures the expression 198·6 *u*, meaning by that 198·6 British units of heat. These lectures which are published in the April, May, and June numbers of *The Society of Arts Journal*, 1885, should be read by all students going forward to the honours examination in steam.

Digitized by Google

Calorimetry.—The Ice Calorimeter of Laplace and Lavoisier* consisted of three thin copper vessels of different sizes, so as to permit one being placed inside another. The outer and middle one were packed with broken ice, and were furnished with drain pipes and cocks by which to run off the ice as it became melted. The third or inner vessel held the body to be experimented upon. Although this apparatus furnished good results in the hands of the inventors, it is liable to lead to erroneous determinations, owing to the water produced in the middle vessel adhering to the broken ice, instead of draining completely away.

An improved form of ice calorimeter, designed by Bunsen, is illustrated in the following figure, and is thoroughly reliable in the hands of a good experimeter (see Appendix II.)

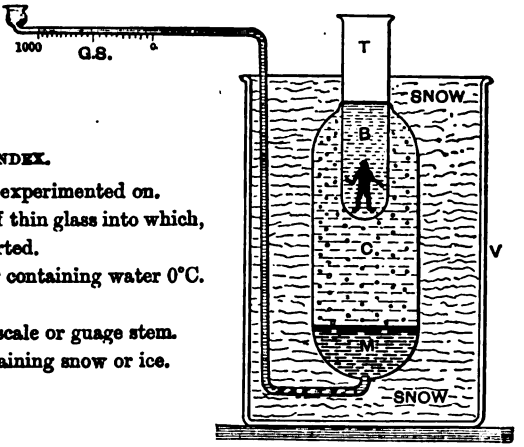

INDEX.

B for Body to be experimented on.
T ,, Test tube of thin glass into which, B, is inserted.
C ,, Calorimeter containing water 0°C.
M ,, Mercury.
G S ,, Graduated scale or guage stem.
V ,, Vessel containing snow or ice.

BUNSEN'S ICE CALORIMETER.

The body, B, of known weight, which is to give off the quantity of heat to be measured, is first heated in a test tube held in a current of steam of known temperature. It is then dropped quickly into the very thin, dry, clean test tube, T, which is now corked with cotton wool. This test tube is surrounded with solid ice contained in the calorimeter, C. In the botton of the calorimeter there is a quantity of mercury, M, which extends up through the thin tube to the graduated scale, G S.

* See Maxwell or Tait on "Heat," for a full description of Lavoisier's ice calorimeter and its defects.

Digitized by Google

The vessel, V, is packed either with newly fallen snow, free from dust particles, or with ice. The ice in the calorimeter is made of distilled water, from which every trace of air has been expelled. If there was air in the water, the process of freezing would expel it, and produce bubbles in the top of the calorimeter, which would vitiate the results, for the accuracy of the test depends upon observing the diminution of the volume of the ice in the calorimeter, C, on a portion of it becoming melted by the heat passing from the body, B. This diminution of volume of a portion of the ice is indicated by the free end of the column of mercury at the graduated scale, G S, moving inwards. The value of these gradations having been previously ascertained, the quantity of ice melted, and consequently the number of units of heat that pass from the body, B, when it has fallen to the temperature of the ice, are easily ascertained.

The value of the graduations on the scale, G S, may be approximately ascertained, by placing a known weight of water at a known temperature in the test tube, T, instead of the body, B, and noting the number of divisions which the free-end of the mercury passes inwards, when the water in the test tube has fallen to the temperature of the ice in the calorimeter.

EXAMPLE.—Suppose 1 lb. of water at 212° F. to have been placed in the test tube, T, and that, when its temperature had fallen to the temperature of the ice, 32° F, the free end of the mercury at the scale had moved inwards from 0 to 32 divisions on the scale. Now, on placing 1 lb. of lead at 212° F. in the test tube, T, and waiting until its temperature fell to 32° F, if we found that the free end of the mercury only moved inwards by 1 division, we would conclude that the quantity of heat which had passed from the 1 lb. of lead had only been $\frac{1}{32}$ part (·031) of what had previously passed from the water in the test tube to the ice in the calorimeter, under precisely similar circumstances (see Appendix II. for a more exact method).

The capacity for heat of lead, or its thermal capacity, is therefore $\frac{1}{32}$, or ·031 that of the standard water.

Method of Mixture.—This method depends on the quantity of heat which escapes from one body, increasing the temperature of another body.

To illustrate this method, again take the case of lead. Weigh out 1 lb. of sheet lead, roll it into an open spiral, and attach it to a string. Now, dip the lead into a pot of freely boiling water until it has attained the temperature of the water. While this is going on weigh out a pound of cold water, and ascertain its temperature with a thermometer; say it is 47° F. Then lift the lead from the boiling water, and, while holding it by the string

Digitized by Google

ing from the water, allow all water to drop from
e it quickly in the cold water vessel, keeping it
ns of the string, so as to bring it intimately into
very portion of the water, as shown in the follow-
here, L, is the lead,
ermometer. Observe
rise in temperature of
ue to the heat passing
ead, note the point at
ses to rise, and suppose
52°F. We have thus
data, from which we may
he relative capacities for
d and water, if none of
from the lead was given
other body than to the

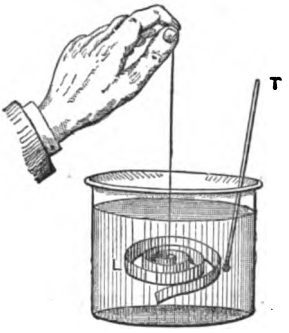

—The diminution in tem-
e of the lead from 212° to
160°; the increase in temperature of the water from 47°
= 5°.

refore, since—

total quantity of heat before mixture = the total quantity mixture;

1 lb. of lead at 212° + 1 lb. of water at 47° = 1 lb. of
+ 1 lb. of water both at 52°.

r, the heat from 1 lb. of lead falling 160° = the heat im-
ed to 1 lb. of water raised 5°.

$$\therefore \frac{\text{The units of heat in 1 lb. of lead}}{\text{The units of heat in 1 lb. of water}} = \frac{5}{160} = \frac{1}{32}.$$

In other words, the capacity for heat of lead is only $\frac{1}{32}$ part
at of water, or the same quantity of heat would raise 1 lb. of
ad through 32 times as many degrees as it would 1 lb. of
ater.

Specific Heat.*—*The specific heat of a body is the ratio of the quantity of heat required to raise that body one degree, to the quantity required to raise an equal weight of water one degree in temperature.*

Note.—The specific heat of an elementary solid (pure body) is inversely as its atomic weight, or the specific heat multiplied by the atomic weight is a constant quantity.

* The *specific heat* of a body is frequently termed the "*capacity for heat*" or the "*thermal capacity*" of that body.

Digitized by Google

We may now apply the knowledge we have gained in this lecture to proving the rule for using Wilson's Pyrometer, as given in our last lecture. Observe, Wilson plunges a known weight of platinum (for the sake of illustration, assume it to be 1 lb.) at an *unknown* temperature, $t_1°$, into double its weight of water (say 2 lbs.), and notes the rise in temperature, $t_2°$ to $t_3°$, from which he calculates the original temperature, $t_1°$, of the platinum, and, therefore, of the furnace from which it had been taken. Thus—

The Total Heat before Mixing = the Total Heat after.

1 lb. platinum at $t_1°$ + 2 lbs. water at $t_2° =$ (1 lb. platinum + 2 lbs. water) at $t_3°$.

Now we know that the total heat in the platinum in each case is found by multiplying its weight by its specific heat (see table next page ·0324) by its temperature.

$\therefore$ 1 lb. $\times$ ·0324 $\times$ $t_1°$ + 2 lbs. $\times$ $t_2° =$ 1 lb. $\times$ ·0324 $\times$ $t_3°$ + 2 lbs. $\times$ $t_3°$.

Or, 1 lb. $\times$ ·0324 $(t_1° - t_3°) =$ 2 lbs. $(t_3° - t_2°)$.

i.e., The weight of platinum $\times$ its specific heat $\times$ its fall in temperature = weight of water $\times$ its rise in temperature.

$$\text{Or, } t_1° = \frac{2\,(t_3° - t_2°)}{\cdot 0324} + t_3°$$

$$\textit{i.e., } t_1° = 62\,(t_3° - t_2°) + t_3°.$$

Or, *the temperature of the platinum* = 62 *times the rise in temperature of the water + the final temperature of the water.*

The general formula, therefore, for the mixture of any two substances is—

$$\mathrm{M\,S}\,(t_1° - t_3°) = m\,s\,(t_3 - t_2).$$

Where—M Stands for the Mass in lbs. of the one substance.
S ,, ,, Specific heat ,, ,,
m ,, ,, Mass of the other substance.
s ,, ,, Specific heat ,, ,,
t_1 ,, ,, the original temperature of substance M.
t_2 ,, ,, ,, ,, ,, ,, m.
t_3 ,, ,, final temperature of both M and m.

Of course s is taken as unity, or 1 in the case of water.

Digitized by Google

SPECIFIC HEAT OF SUBSTANCES,

BY REGNAULT AND OTHERS.

From D. K. Clark's "Rules, Tables, and Data," at between 32° and 212° Fah., unless stated.

Water at 39°·1 F.,	1·000
,, ,, 212° F.,	1·013
Ice at 32°,	·504
Steam at 212°,	·480
Mercury,	·033
Iron, cast,	·130
,, wrought,	·113
Steel, soft,	·116
Copper,	·095
Lead,	·031
Zinc,	·093
Tin,	·057
Silver,	·057
Platinum, sheet,	·0324
,, spongy at 952° F.,	·035
Coal,	·240
Coke,	·200
Olive Oil,	·310
Air,	·238
Carbonic oxide,	·248
Carbonic acid,	·217
Hydrogen,	3·404
Oxygen,	·218
Nitrogen,	·244

For more complete tables see Rankine's *Rules and Tables*, 6th edition, or D. K. Clark's *Rules, Tables, and Data.*

BUNSEN'S CALORIMETER.

UNDER the heading Calorimetry, we gave a general idea of the principle and action of Bunsen's Calorimeter, but as the instrument, if properly handled, is capable of great accuracy, we have thought it advisable to give the following more complete and detailed information in the Second Edition, which should be of considerable interest to those desirous of carrying out experiments on the specific heats of different substances.

To find Constant for the Graduated Scale.—The first thing necessary in carrying out accurate experiments with this instrument is to ascertain the

Digitized by Google

absolute volume of the graduated gauge stem, G S (see next figure). Insert into this tube, a small thread of mercury, taking care not to touch it with the hands as that would alter its temperature, and consequently its length. Bring the inner end of the thread to the zero end of the scale, and place a pocket microscope over it. Suppose it measures 100 divisions in length on the scale, G S; then move it along the tube until its inner extremity stands at division 10, and again read its length by means of the microscope. Repeat this until the whole length of the gauge tube has thus been tested. If the length of the mercury thread is at any position appreciably more or less than 100 divisions, then the tube is not of uniform bore, and must be rejected; for even a slight variation in the bore would unnecessarily complicate the future readings and calculations.

Suppose then that a good gauge tube has been obtained, we have now to find a constant, C, for it by the following formula :—

$$\textit{Constant, } C = \frac{\text{Weight of mercury thread in grammes} \times (1 + 0{\cdot}00018\,t)}{\text{Specific gravity of mercury} \times \text{Average length of thread}}$$

which is the volume of one division, the graduations being in centimetres.

The constant for the graduated stem of the instrument with which the following experiment was performed, was found from the data—

Weight of mercury thread	= 0·5248 gramme.
Temperature of room, t	= 16° Centigrade.
Specific gravity of mercury	= 13·596.
Average length of thread	= 12·736 divisions on G S.

Consequently the constant—

$$C = \frac{\cdot 5248\,(1 + \cdot 00018 \times 16^{\circ})}{13{\cdot}596 \times 12{\cdot}736} = \cdot 00303.$$

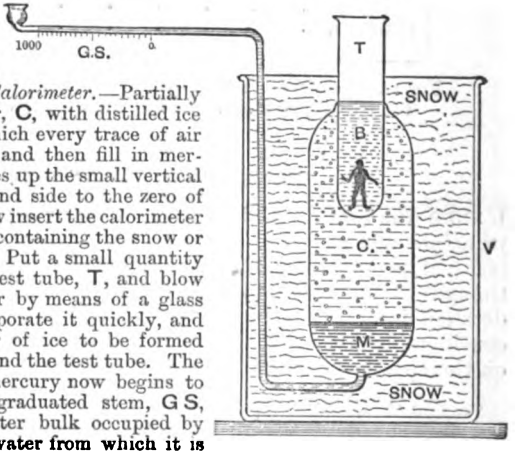

How to use the Calorimeter.—Partially fill the calorimeter, **C**, with distilled ice cold water from which every trace of air has been expelled, and then fill in mercury until it reaches up the small vertical tube on the left-hand side to the zero of the scale, **G S**. Now insert the calorimeter into the vessel, **V**, containing the snow or freezing mixture. Put a small quantity of ether into the test tube, **T**, and blow through this ether by means of a glass tube so as to evaporate it quickly, and thus cause a layer of ice to be formed close to and all round the test tube. The free end of the mercury now begins to travel along the graduated stem, **G S**, owing to the greater bulk occupied by the ice than the water from which it is being formed. Readings should be taken, say every minute or so, of the

Digitized by Google

position reached by the mercury on the scale, **G S**, in order to estimate the rate at which ice is being formed in the calorimeter.

When the free end of the mercury has moved near the outer end of the scale marked, 1000, drop the body, **B** (whose specific heat has to be found), into the test tube, **T** (which should now be clean and dry), and rapidly cork up the open end of the test tube by means of a plug of cotton wool, so as to prevent as far as possible any loss of radiation of heat from the body under test, than that directly through the test tube into the ice in the calorimeter. As stated in Lecture IV., the body, **B**, has been previously heated to any desired known temperature by placing it in a current of steam of known temperature, t' (or otherwise). Now read off the respective positions of the free end of the mercury on the graduated scale, **G S**, every minute or so as it travels *inwards* due to the melting of ice in the calorimeter, **C** (owing to the heat passing from the body, **B**), until it ceases to move inwards and begins to go *outwards* again; for it is not until then that the body, **B**, has been reduced to the same temperature as the ice in the calorimeter. Continue to take a few readings after the mercury has begun to move outwards, so as to observe if ice is being formed at the same rate as before the body, **B**, was introduced.

Correction of the Readings.—The readings on the scale, **G S**, when the mercury is passing *inwards*, does not give a true direct measure of the quantity of ice being melted by the heat passing from the body, **B**, under test, because at the *same time* that ice is being melted other ice is also being formed owing to the calorimeter, **C**, being surrounded by a freezing mixture; and consequently a correction has to be applied to these readings.* Further, different substances have different rates of giving up or taking in heat, and thus the readings observed are more or less affected by the constant formation of ice due to the presence of the outside freezing mixture, according as the body in the test tube takes a longer or shorter time to give up its heat. In order therefore to obtain *true* readings, take a sheet of squared

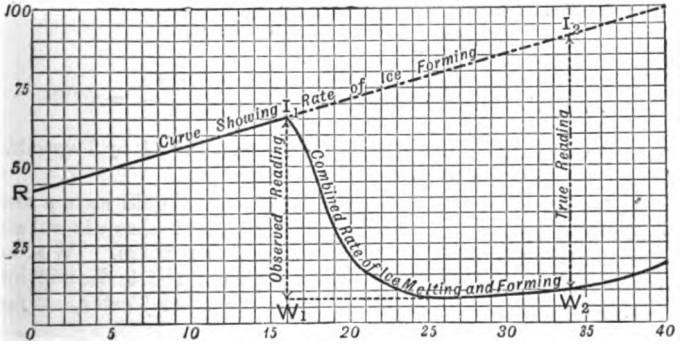

paper like that in the foregoing figure, and let the vertical lines or ordinates represent the actual readings obtained from the scale, **G S**, while the horizontal lines or abscissæ stand for the intervals of time between the

* This is an important point which the author has not found mentioned in any treatise on the subject.

Digitized by Google

observed readings. *First*, plot down the line or curve, R l_1 l_2 (from the first set of readings and times mentioned above), *indicating the rate at which ice is being formed* in the calorimeter. *Second*, note the reading, l_1, on the scale, G S, at the instant the body, B, is introduced into the test tube, T, and then plot down the curve, l_1 W_2, *showing the apparent rate at which ice is being melted.* It is evident that when the body is put into the test tube this curve will show a sudden fall shown by length of ordinate, l_1 W_1, in dotted lines. By the time that the point, W_2, has been reached, the body, B, has been reduced to the same temperature as that of the water in the calorimeter, and the curve again begins to rise at the same inclination as, R l_1 l_2, owing to the continuous and unimpeded formation of ice in the calorimeter.

Now the ordinate, l_1 W_1, from the observed readings, does not indicate the true reading or the full quantity of ice melted, but the ordinate, l_2 W_2, does, for during the time that heat was passing from the substance under test, ice was also being formed at a rate represented by the line, R l_1 l_2. Therefore, to get the true reading raise a perpendicular from the point, W_2, where the curve begins to rise parallel to its former direction until it meets the curve, R l_1 l_2, at the point, l_2, and note its length, l_2 W_2, in divisions of the ordinate or graduated scale, G S.

Example.—The following data are taken from an experiment carried out by one of the author's old students, Mr. James M'Lure, in the Physical Laboratory, Normal School of Science, South Kensington, to determine the specific heat of Mercury :—

C for Constant of graduated tube as before = ·00303 c.c.
n ,, Number of divisions indicated by l_2 W_2 in the last figure = 78.
M ,, Weight of substance under test = 49·51 grammes.
t ,, Temperature in degrees Cent. at which substance was put into the test tube.
875·4 ,, Kohlrausch's constant.*

Then the specific heat of any body is given by the following formula:—

$$\frac{v}{M} \times \frac{875{\cdot}4}{t} = \frac{C \times n}{M} \times \frac{875{\cdot}4}{t}$$

$$\therefore \text{ Specific heat of Mercury} = \frac{{\cdot}00303 \times 78 \times 875{\cdot}4}{49{\cdot}51 \times 14{\cdot}8} = {\cdot}03195.$$

Which result differs but slightly from that obtained by Regnault, see Table, page 37 of this book.

It is extremely important that engineers should have a simple and ready method of testing the relative and absolute values of the different kinds of fuel employed by them. We have, therefore, thought it advisable to give a short description of Mr. Lewis Thompson's Calorimeter or Fuel Tester, as manu-

* See *Kohlrausch's Practical Physics*, Article on "Specific Heat," p. 79, by Messrs. Churchill & Company, London. Bunsen says, 1 gramme of ice at 0° C. has a volume = 1·09032 cubic centimetres, also 1 gramme of distilled water at 0° C. has a volume = 1·00072 cubic centimetres. Now 79·4 French units of heat or calories are required to melt 1 gramme of ice. This quantity of heat gives a diminution in volume = ·0907 cubic centimetres, therefore 1 unit of heat gives a diminution in volume.

$$= \frac{{\cdot}0907}{79{\cdot}4} = \frac{1}{875{\cdot}4}; \quad \therefore \text{ Specific Heat} = \frac{v}{M} \times \frac{875{\cdot}4}{t}.$$

Digitized by Google

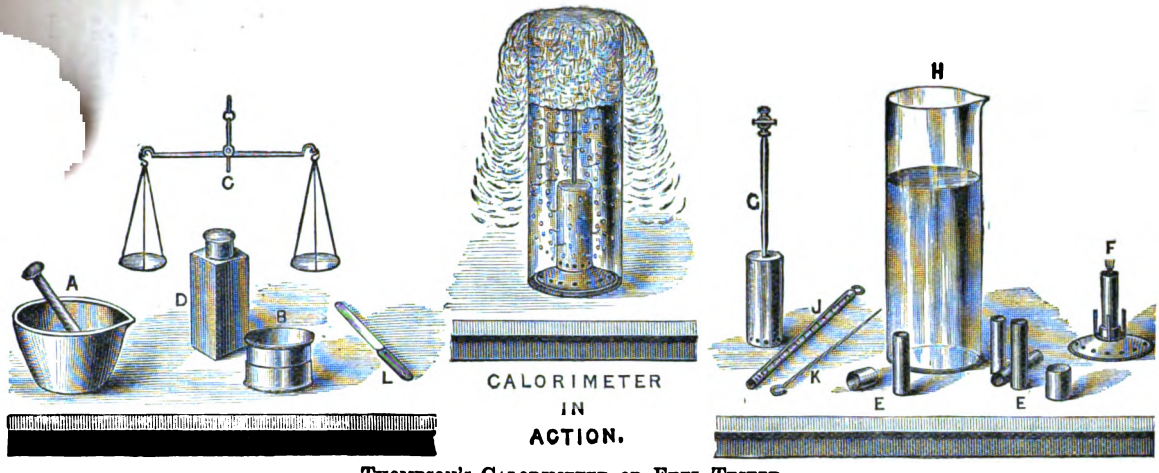

THOMPSON'S CALORIMETER OR FUEL TESTER.

A for Iron Mortar for pounding fuel.
B ,, Sieve for sifting fuel.
C ,, Balance for weighing fuel, &c.
D ,, Bottle containing oxygen mixture.
E ,, Copper Furnaces.
F for Brass Base to support **E** and **G**.
G ,, Condenser Cylinder.
H ,, Glass Cylinder filled with 1934 grammes water.
J ,, Thermometer.
K ,, Wire pricker used in clearing the tube, **G**.
L for Spatula, used to mix the fuel and oxygen mixture.

Digitized by Google

factured by Messrs. Alex. Wright & Co., London. This apparatus has been adopted by several Railway Companies, as well as by the British and Foreign Governments, &c., to determine the relative commercial value of the coals which they purchase.

Principles on which the Calorimeter is Based.—First, that the latent heat of steam is equal to 966·6 (or in round numbers 967) British Units of heat; and secondly, that coal burned in pure oxygen evolves the same amount of heat as when *perfectly* burned in atmospheric air. Thus it follows, that if we heat or raise 967 parts (by weight) of water 1° Fah., we have employed as much heat as would have boiled off 1 part (by weight) of water from 212° Fah. If the same quantity of water had been heated 10° Fah., then we have used heat equivalent to boiling off 10 parts of water, and so on. The thermometer being used to indicate in this way, the number of parts of water capable of being boiled off by the heat generated by the perfect combustion of the fuel. As one pound of coal is an inconveniently large quantity of fuel to use with such an apparatus, it has been specially designed for burning 2 grammes of fuel at a time. From the above it will be observed that, if we contrive to thoroughly burn 1 gramme of fuel in the midst of 967 grammes of water, the increased temperature of the water will show us the number of grammes of water which 1 gramme of the fuel in question is able to convert into steam at 212° Fah., and we have thus at once the evaporative value of the fuel. As it has been found advisable to use a larger quantity of coal or other fuel than 1 gramme, the apparatus is specially designed (as we have just remarked) for 2 gramme quantities, and of course for a corresponding quantity of water—viz., 967 × 2 or 1934 grammes. As the weights of fuel burned and of water used are directly proportional to the latent heat of steam, the indications of the apparatus are general, and may be expressed in any weights whatever—*e.g.*, in pounds of water boiled off per pound of coal.

Instruction for Taking the Test.—(1.) Select from a mass of the coal or fuel to be tested several portions which will collectively represent an average sample, and reduce them to a powder. Mix the samples thoroughly, and put about 20 grammes of it into the iron mortar, **A**, and pound it well. Then sift it through the sieve, **B**, on to a sheet of white paper. Return the coarser particles to the mortar, and pound them again, as well as sift them, and intimately mix the powdered fuel.

(2.) The oxygen mixture for combustion of the fuel is kept in the bottle, **D**, and consists of 3 parts of chlorate to 1 part of nitrate of potash, each of the purest quality, reduced to a powder, so that it will pass through a gauze of 1000 meshes to the square inch, which powder must be perfectly dry. Two grammes of the powdered fuel are now intimately mixed with from

Digitized by Google

8 to 13 (or more) times its weight of this oxygen mixture, by means of the spatula, L.

(3.) Carefully introduce the resulting grey powder into one of the copper furnaces, E, and compress it down in successive small portions, by means of a rammer or test tube, but without tapping, for if tapping or shaking be resorted to the rougher portions of the oxygen mixture rise to the surface.

(4.) The furnace, E, is next placed in the socket of the brass plate, F, and about ¼ inch length of fuse placed on the top of the powder as seen in the figure at, F.

(5.) Fill the glass cylinder, H, up to the engraved line with water (*i.e*, put in 1934 grammes), and take the exact temperature of the water by means of the delicate thermometer, J. All thermometer readings *must* be read to at least one-tenth of a degree, otherwise the exactness of the experiment will be impaired. It is important to bring up the temperature of the water to within a few degrees of that of the room by adding if necessary a little hot water, and extracting any excess of water above the 1934 gramme mark by means of a pipette. The following relative temperatures are recommended:—

Room at degrees Fah.,	80,	72,	67,	60,	55,	50,	42
Water should be ,,	70,	64,	60,	54,	50,	46,	40.
Differences ,,	10,	8,	7,	6,	5,	4,	2.

(6.) Having the Condenser Cylinder, G, with its stop-cock closed, ready at hand, light the fuse of the charge on, F, and *at once* cover it with the condenser, pressing the latter firmly down upon the clutch springs of the base, and immediately submerge the whole in the water contained in the glass cylinder, G. This whole operation must be performed *before the fuel and oxygen mixture is ignited*, otherwise the whole would be consumed in the air, and the experiment destroyed. See central figure, "Calorimeter in Action."

(7.) When combustion has ceased, open the stop-cock of the condenser, and if air does not freely issue insert the long wire, K, and move the condenser several times up and down in the water, to cause the water within and without the condenser to assume the same temperature. Blow away the smoke, and note the temperature of the water, losing as little time as possible. As an average of 10 per cent. of the heat generated by the fuel is absorbed by the instrument, *add* 10 *per cent. to the observed temperature.*

(8.) The furnaces must be well cleaned and dried out before being re-used.

TEST WITH A WELSH STEAM COAL, BY F. W. HARTLEY, A. INST. C.E.

Grammes of oxygen mixture to 2 grammes of coal, . .	26
Time of combustion in seconds, ...	65
Water raised in degrees Fah. + 10 per cent. for instrument,	14·4
∴ Weight of water that would be evaporated at 212° F. per pound of such coal, if the water received all the heat from its perfect combustion, ...	14·4 lbs.*
British heat units generated per pound of the coal = 1934 grammes × 14°·4 ÷ 2 grammes of fuel, ...	13,925

* The same result [illegible] ed by Prof. Sexton of the College of Science and Arts, Glasgow [illegible] motive steaming coal used by the North British Railway [illegible] 1887.

Digitized by Google

LECTURE IV.—QUESTIONS.

1. What do you mean by the quantity of heat in a body, and how is it measured?

2. What is the unit of heat adopted in Great Britain? How many units of heat are imparted to a cubic foot of water (62·5 lbs.), on raising it from 60° to 212° F., also to 1 lb. of copper? *Ans.* 9,500, and 14·44.

3. Define and show the difference between the terms "capacity for heat" and "specific heat" of a substance. Suppose a substance was given to you to find its specific heat, how would you conduct the experiment? Give an arithmetical example.

4. If 1 lb. of platinum is plunged into 1 lb. of water at 50° F., and the resultant temperature of the water is 112° F., what was the original temperature of the platinum? *Ans.* 3939° F.

5. If 2 lbs. of copper at 500° F. are plunged into 4 lbs. of water at 60° F., what will be the resulting temperature? *Ans.* 80° F.

Digitized by Google

LECTURE V.

CONTENTS.—Transfer or diffusion of Heat—Radiation—Conduction—Convection.

Transfer or Diffusion of Heat.—It was explained in the last lecture, that equality of temperature between two bodies exists, when there is no tendency to a transfer of heat from either to the other. We saw also that, when their temperatures differed in the slightest degree, there is a tendency to an equality of temperature, by a transfer of heat from the hotter to the colder, and that this tendency is greater, the greater the difference of temperature between the bodies.

Rankine states that the rate at which the transfer of heat takes place between two bodies, at unequal temperatures, depends—

"*First.* On the tendency to transfer heat, increasing as some function of the two temperatures and their difference.

"*Secondly.* On the areas of those parts of the surfaces of the bodies through which the transfer of heat takes place. In most of the cases which occur in practice, those areas are equal, and then the rate of transfer of heat is directly proportional to their common extent.

"*Thirdly.* On the nature of the material of each of the bodies, and the condition of their surfaces.

"*Fourthly.* On the nature and thickness of the intervening substances, if any. Increase of that thickness diminishes the rate of transfer of heat.

"The transfer of heat takes place by three processes, called respectively, *radiation*, *conduction*, and *convection*.

"Radiation of heat takes place between bodies at all distances apart, in the same manner and according to the same laws with the radiation of light." *

Radiation.—To illustrate the radiation of heat from one body to another, take a common poker, heat it to redness in the fire, and hold one hand a few inches from the heated end, as shown in the figure.

The hand experiences the sensation called heat, owing to the transfer of the same in straight lines from the hot poker, as it were by radial vibrating rays of heat energy.

* From Rankine on *The Steam Engine*, p. 257.

Digitized by Google

Another common, but interesting illustration, is that of making a convex lens of ice, by pressing a heated concave scale-pan of a balance on a block of ice, and holding this lens between the sun and your coat at the proper distance, so as to

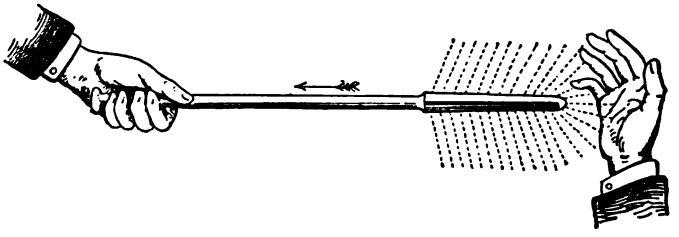

focus the heat rays on the same. The lens of ice as well as the air will be scarcely affected by the heat rays passing through them, while the coat will soon be burned.

An even still more interesting and striking experiment, due to Professor Tyndall, is that of focussing the heat rays from the sun or a strong electric arc light on the interior of a block of ice.

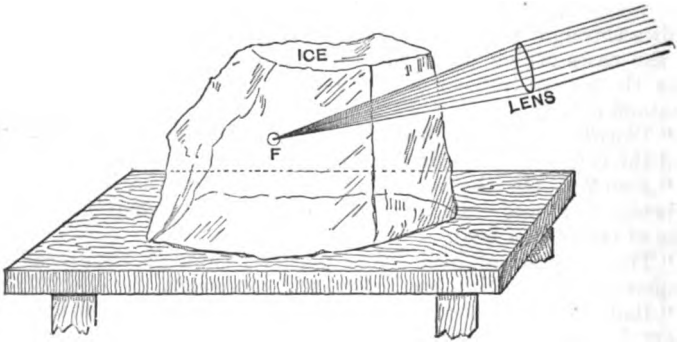

The heat rays pass through the mass of ice without apparently affecting it, except at the point where they meet; here the ice very soon becomes melted.

The phenomenon of radiation consists, therefore, in the transmission of energy from one body to another by propagation through the intervening medium, in such a way that the progress of the radiation may be traced, after it has left the first body and before it reaches the second, travelling with a certain velocity and leaving the medium behind it in the condition in which it

Digitized by Google

found it. It is only when the radiation is stopped that the effects of heat are observed.

Radiant heat is propagated with a speed practically the same as that of light; for example, after a total eclipse of the sun, the heat rays reappear simultaneously with those of light, travelling somewhere about 186,000 miles per second. In free space, or in air of uniform density, light moves in straight lines, so does radiant heat, whether from the sun or from a terrestrial source; in fact, radiant heat and light may be regarded as identical and inseparable.* Speaking generally, the rate of radiation of heat by the hotter of a pair of bodies, and of its absorption by the colder, are increased by darkness and roughness of the surfaces of the bodies, and diminished by smoothness and polish. The best radiators of heat are likewise the best absorbers of heat, and the poorest reflectors. For example, it will be seen from the following table, that the radiating and absorbing power of soot is a maximum or 100, while its reflecting power is nil—a fact of considerable importance in connection with the generating of steam in boilers. Again, cylinder covers are highly polished; why?—to prevent radiation of heat therefrom.

COMPARATIVE RADIATING, OR ABSORBENT, AND REFLECTING POWERS OF SUBSTANCES.

SUBSTANCE.	POWERS.	
	Radiating or Absorbing.	Reflecting.
Lampblack or soot, ...	100	0
Water, ...	100	0
Cast iron, polished, ...	25	75
Wrought ,, ...	23	77
Steel ,, ...	17	83
Brass, cast, dead polish, ...	11	89
,, ,, bright, ...	7	93
Copper, hammered or cast, ...	7	93
Silver, polished bright, ...	3	97

Conduction.—*Conduction is the transfer of heat through substances, or from one substance to another when in contact, due to difference of temperature.* It may be conveniently divided into *internal* and *external* conduction, according as the transfer of heat takes place, between the parts of one continuous body, or through the surface in contact of a pair of distinct bodies, although to a large extent external conduction or surface con-

* See Professor Tait on *Heat*, chap. xvi.

Digitized by Google

ductivity is an action of the same kind as internal conduction, for the conduction takes place in the surrounding medium. For example, take the heated poker (figure on p. 39), the end held in the left hand becomes gradually heated by the transfer of heat, from molecule to molecule of iron, along the poker in the direction of the arrow, while the hand is heated by the transfer of heat through the surface in contact therewith.

A body which conducts heat quickly, is called a good conductor of heat; if it conducts heat slowly, it is called a bad conductor, or, if *very* slowly, a non-conductor of heat. For example, hold a copper rod in the hand, and place it in the fire in the same way as we did the iron poker, the sensation of heat is felt by the hand much sooner than in the case of the poker, whereas, if we do the same with a piece of wood, of the same length and cross-section as the poker, or the bar of copper, it will be entirely burnt away at the end placed in the fire, before any appreciable heat is conducted to the hand.

A common class experiment to illustrate the different conducting powers of bodies is that shown by the following figure, where small balls are attached by wax at regular intervals to two rods or bars, *e.g.*, copper and iron, and heat applied to their inner ends simultaneously, and equally, as shown.

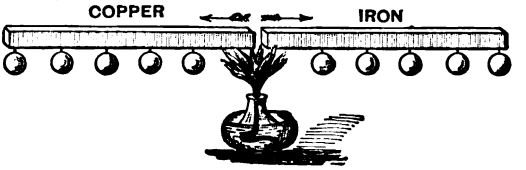

The balls attached to the copper bar fall off, by the melting of the wax, much sooner than those hanging from the iron one, thus proving conclusively that copper is a better conductor of heat than iron, although their capacities for heat are about the same.

Thermal conductivity must be measured (other things being equal) by the quantity of heat which passes; therefore the rate at which conduction (whether internal or external) goes on, is proportional to the cross area of the section, or the surface through which it takes place. It may be expressed numerically in so many units of heat per square foot, per minute, or per hour. For example, engineers speak of the evaporating power of a boiler, as so many pounds of water raised into steam at a certain pressure per square foot of grate surface per hour, or plus per square foot of the additional heating surfaces, although in reality it depends on many things besides mere conduction of the plates.

To compare plates of different materials, we must take them

Digitized by Google

all of the same thickness and superficial area, and subject them all on the one side to a certain temperature, and on the other side to the same number of degrees more or less.

DEFINITION.—*The thermal conductivity of a body at any temperature is the number of units of heat which pass, per unit of time, per unit of surface, through an infinite plate (or layer) of the substance, of unit thickness, when its sides are kept at temperatures respectively half a degree above and half a degree below that temperature* (TAIT).

Although the above definition is perfect, in as far as it lays down theoretically a thoroughly systematic way in which the relative conducting powers of different substances may be compared, it is found practically impossible to realise experimentally such simple conditions.

The methods chiefly employed for measuring thermal conductivity depend ultimately upon observations of the temperature of the body at different parts of its mass.

The temperature effects of a given quantity of heat are inversely as the capacity for heat of the body; hence, what is directly deduced from such experiments is not the thermal conductivity as just defined, but *its ratio* to the capacity for heat of the body.* Thus, these experiments require in addition, the

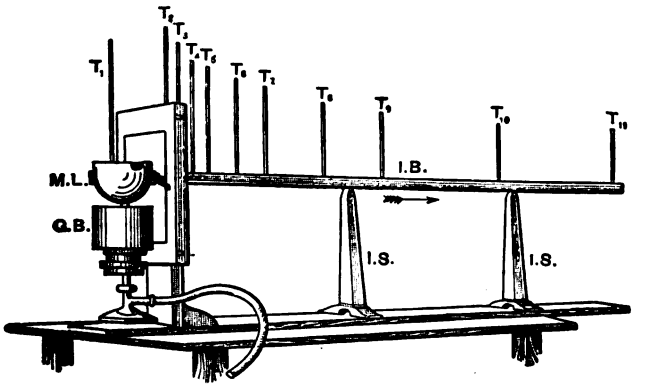

FORBES' EXPERIMENT ON CONDUCTIVITY.

I B for Iron bar. | M L for Melted lead.
I S ,, Insulating supports. | G B ,, Gas burner (Argand).
$T_1, T_2 \ldots T_{11}$,, Thermometers.

*This is termed *Thermometric Conductivity* by Maxwell and DIFFUSIVI... by Sir William Thomson (see tables at end of Conduction).

Digitized by Google

determination of the specific gravity and of the specific heat of the body.

Principal Forbes' well-known experiments on the conductivity of iron * are the most trustworthy, and will illustrate what has been written and show the student how experiments might be carried out on other metals.

A long bar, I B (in Forbes' experiment, 8 feet by $1\frac{1}{4}$ inch square), fixed on non-conducting or insulating supports, I S, has one end inserted into a pot of melted lead, M L, or solder, kept at a constant temperature by the Argand gas burner, G B. The bar has small holes drilled in it, into which the bulbs of the various accurate thermometers, T_2, T_3 . . . T_{11}, are introduced, a little mercury being poured into the holes so as to form good contact between the bulbs of the thermometers and the bar. The bar is first brought to a uniform temperature, by being left in the laboratory all night without the application of heat. The end is then inserted into the bath of melted lead, and the rise in temperature noted by each of the thermometers, those nearest to the bath beginning to rise first, and then the next, and so on to the last, until finally each of them arrives at a fixed temperature, with a gradual fall between each, graphically represented in the figure by the length of the thermometer stems. The quantity of heat which now passes per minute across any particular transverse section of the bar is constant, and is equal to the product of the cross area, the conductivity, and the fall of temperature at that section. Hence, the quantity of heat passing is expressed by a definite multiple of the unknown conductivity. But that heat does not raise the temperature of the bar beyond the section in question, for the temperature has become stationary, owing to just as much heat passing into the air by cooling as flows into the bar from the leaden bath. To find this rate of cooling, a short bar of the same cross-section and material as the long one, with a thermometer stuck into it, is highly heated and allowed to cool, the rate of cooling being noted by taking frequent readings *at exactly equal intervals of time*—say every half-minute. The heat lost per minute per unit of length, at each temperature, within the range employed, is thus obtained, and a calculation made of what the long bar lost at any particular cross-section.

Principal Forbes found by his experiments that the conductivity of iron for heat, like its conductivity for electricity, diminishes with a rise of temperature. This similar effect on the two forms of energy, heat and electricity, does not appear

* *Trans. Roy. Soc., Edin.*, 1861-2.

Digitized by Google

however to be common to the other metals experimented upon by Professor Tait; but, as he remarks, "the whole subject, as far as experimental details are concerned, is still in a very crude state."

The value of k in the following expression gives the *thermal conductivity* of a substance at a given temperature in accordance with the definition:—

$$Q = k\,A\,\frac{t_2 - t_1}{x}\,.\,T,$$

Where Q denotes the Quantity of heat that flows in time, T.
A „ „ Cross area, or the area of each of the opposite faces of the plate.
x „ „ Thickness of the substance.
t_1, t_2 „ „ Temperatures on each side of the plate.

From which we see, as has been already remarked, that the quantity of heat which flows by conduction through any substance is directly proportional to the area, and to the difference of temperature between its faces, and inversely proportional to the thickness.

In most experiments the value of the *thermal conductivity* constant, k, is given in accordance with the centimetre, gramme, second, or C.G.S. system of units, and not in the more familiar English foot-pound-minute system. The engineering student will find the following table, taken from the best source—viz., Sir William Thomson's article on "Heat" in the *Encyclopædia Britannica*, 1880 (where the values for the constants, k, c, and $\frac{k}{c}$, are all in C.G.S. units), of considerable interest. From these results, we see that the thermal conductivity of copper is 500 times that of water, and 20,000 times that of air, while iron is 80 times that of water, and 3,500 times that of air. These are important facts to bear in memory, for it shows us that the transmission of heat from the radiant burning coal or charcoal in our furnaces or domestic fire-places on one side of a boiler-plate, kettle,* or frying-pan, to hot water, steam, or melted fat on

* William Foulis, M. Inst. C.E., General Manager of The Glasgow Corporation Gas Works, has found, in connection with his numerous experiments on water-heating apparatus for houses and railway carriages worked by gas flames, that thin cast-iron transmits heat more rapidly and effectually to water than copper or other smooth metals of the same thickness and area. This is probably due to the numerous small rough points on the surface of the cast-iron next to the water taking up the heat vibrations and communicating them to the liquid more thoroughly than the much smoother surface of copper or wrought-iron—*A. J.*

Digitized by Google

DIFFUSIVITIES (THERMAL, MATERIAL, AND ELECTRIC).

Substance.	Thermal Conductivity. k.	Thermal Capacity of Unit Bulk. c.	Diffusivity.* k/c.	Authority.
Copper,	0·91	0·845	1·077	...
Iron,	0·16	0·875	0·185	...
Air, Oxygen, Nitrogen, Carbonic oxide,	0·0000049	0·000307	0·16	Clausius and Maxwell, according to kinetic theory.
Carbonic acid,	0·000038	0·000428	0·088 8	
Hydrogen,	0·00034	0·000307	1·12	
Underground strata (rough average),	0·005	0·5	0·01	Forbes and W. Thomson.
Wood,	0·0005	0·39	0·001 3	...
Water,	0·002	1·00	0·002 2	J.T.Bottomley.

* What Clerk Maxwell calls Thermometric Conductivity.

the other side, goes on as if the thermal conductivity of the metal were infinite, or, in other words, the resistance to the transmission of heat through the metal, is as nothing compared to the resistance which it meets with from the liquid or gas.

It is important that the engineer should appreciate the relative conducting powers of the different metals that he has to deal with. For instance, the fire-box of a locomotive is made of copper in preference to iron, partly on account of its greater conductivity and partly on account of its withstanding the destructive action of the fire. Mild steel is, however, now being largely used. Has any one yet tried the relative conductivities of the two?* Again, the outside of boilers and cylinders are carefully lagged with some bad conducting substance, so that as little heat as possible may escape therefrom. The following table gives roughly the relative conducting powers of a few of the more common metals:—

Substance.	Relative Conductivity.	
Copper,	100	
Brass,	30	and upwards, according to percentage of copper in it.
Zinc,	30	
Iron,	16	
German Silver,	10	
Water,	0·2	

* I am unable to find a good and reliable table of the conducting powers of most of the metals. This subject requires to be taken up and experimented upon.—*A. J.*

Digitized by Google

As it is frequently of importance to engineers to know the relative conducting powers of bad conductors for purposes of lagging boilers, steam pipes, and cylinders, we extract the following table, taken from *The Proceedings of the Philosophical Society of Glasgow for* 1884, by J. J. Coleman, F.C.S. (the inventor of the well-known Bell-Coleman freezing machine). The experiments are the latest, and were carried out with great care by means of a modification of the Lavoisier Calorimeter:—

RELATIVE CONDUCTING POWERS FOR HEAT.

Silicate cotton,	100	Charcoal,	140
Hair felt,	117	Sawdust,	163
Cotton wool,	122	Gas-works breeze,	230
Sheep's wool,	136	Wood and air space,*	280
Infusorial earth,	136		

Convection.—When the application of heat to a fluid causes it to expand or to contract, it is thereby rendered rarer or denser than the neighbouring parts of the fluid; and if the fluid is at the same time acted on by gravity, it tends to form an upward or downward current of the heated fluid; this is accompanied with a current from the more remote parts of the fluid in the opposite direction. This action is rendered very apparent by the following simple experiment:—

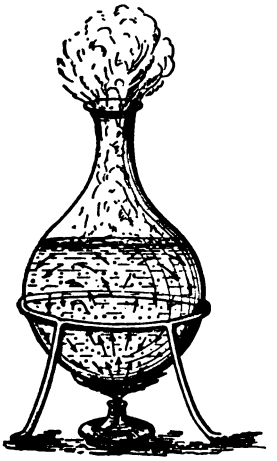

Take a flask partially filled with water, mix a few grains of bran with it, and apply a lighted spirit-lamp to the bottom of the flask. In a few minutes the water will be seen to circulate in the direction shown by the arrows in figure. The water nearest the flame is rendered lighter, and, therefore, rises upwards, while the denser water falls under the action of gravity, to be in turn heated and raised. The actual transfer of heat throughout the water takes place by conduction, but the diffusion is much assisted by the motion of the fluid, or convection currents, as they are termed.

* Wood and air space, although the best heat conductor in the li… often used as a non-conductor lagging for boilers, &c., on account … cheapness and ease of application, but it is not a safe lagging for … boilers, for it has been known to take fire, *e.g.*, in the s.s. "*John P*… one of the Eastern Telegraph Company's cable repairing steamers, in … the author frequently sailed as chief electrician. Charcoal, if only 1½"…

Digitized by Google

The following experiment is also very instructive:—Take a test tube filled with water (left hand, Fig. A), and apply a spirit

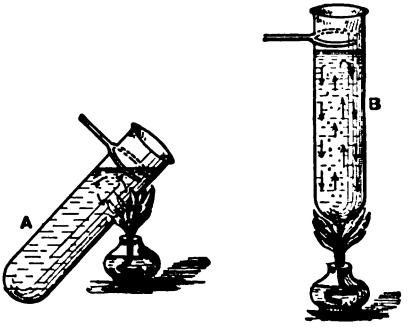

lamp near the surface of the water. You may hold it there for ten minutes or more, and the water at the bottom of the tube is scarcely perceptibly warmer than at first. Now apply the lamp to the bottom of the tube (right hand, Fig. B); in a few minutes the water begins to boil. Why this difference? The convection currents set up, have assisted the naturally bad conducting power of the water by bringing, in turn, every portion of it into close proximity with the source of heat.

It is for the reasons just mentioned, that the fire-place in a boiler is placed near the bottom instead of near the surface of the water, and it is of great moment not only to give a free and easy path for convection currents in boilers, but to stimulate them by such appliances as hydro-kineters. The better the circulation of the water in a boiler, the more rapidly will it be heated and the steam generated. In many boilers (such as those used on board steamers) the internal construction is so mixed up with tubes and stays, that the water has great difficulty in passing from out-of-the-way corners to the more highly heated parts over the flues; and, if circulation is not assisted, the convection currents "short circuit," as it were (to use an electrical term), and thus leave the more remote portions in comparative chill. For a similar purpose, large boiler flues are provided with "baffling plates," to compel the hot gases

is not suitable for boiler lagging, for in the s.s. "*Volta*," belonging to the same Company, a temperature of about 180° F. was observed on the surface when coated to that depth. This lagging was removed, but it might have done very well if put on thicker, say 3". Leadbetter & Company's self-setting non-conducting composition, which looks very much like soft chalk, is said to do very well, and has this advantage, that it can be laid on while the boiler is cold. Silicate cotton although the best non-conductor or heat insulator in the list, is dear and friable.—*A.J.*

Digitized by Google

to take a circuitous course, in order that eddies may be formed, and for the further object of promoting a better mixture of air with the inflammable gases.

The art of promoting a good draught in a furnace, or of properly ventilating a building or a ship, depends upon promoting and guiding the convection currents in the proper direction. This subject is, therefore, of considerable importance to engineers.

Lecture V.—Questions.

1. What is meant by capacity for heat or thermal capacity? The specific heat of mercury being ·033, how much, at the temperature of 240° F., will be sufficient to raise 12 lbs. of water from 50° to 58° F.? *Ans.* 15·98.

2. What will be the relative capacities for heat of the same volumes of air, carbonic oxide, steam, and hydrogen at the same pressures if their densities are as 14·4, 14, 7, and 1 respectively? (Prove answer by arithmetic.) *Ans.* All equal, because the capacity for heat of equal volumes is inversely as the density.

3. What do you mean by conduction and convection, as applied to heat?

4. Describe an experiment by which you would show that water is an extremely bad conductor of heat. For what reason should heat be applied from below when it is required to heat a large mass of water rapidly?

Digitized by Google

LECTURE VI.

CONTENTS.—Nature of Heat—Heat is not a Substance—Rumford, Davy, and Joule's Experiments—Conversion of Work into Heat—First Law of Thermo-dynamics—Joule's Mechanical Equivalent of Heat.

UNTIL the end of last century, two rival theories had been entertained regarding the nature of heat. One, that heat consisted of a subtle elastic fluid, termed caloric, penetrating through the pores or interstices of matter, like water in a sponge; the other, that it was an internal commotion among the particles or molecules of matter.

The former of these theories, or hypothesis, that heat is matter, called the "materialistic doctrine of heat," taught by Professor Black of Glasgow University and others, was most conclusively overthrown by the celebrated experiments of Count Rumford and Davy. It is very remarkable, however, that fifty years elapsed before scientific men generally became converted to the conclusions to be drawn from them. It was not until Joule, during the period extending from 1840 to 1849, had supplied several fresh proofs that heat is not a material substance, but one form of energy, which may be applied to, or taken from bodies in various ways, and that the amount of energy, in whatever form applied or removed, may be estimated in mechanical units of work or foot-pounds, that what is now known as the *Kinetic theory of heat*, became generally accepted, and the science of thermo-dynamics placed on a firm basis.

Count Rumford's experiments on the production of heat by friction, were carried out in the following manner, and communicated to the Royal Society in 1798:—

In casting guns it was usual to leave a projecting cylindrical "head" of metal at the muzzle, so as to insure sound metal in the gun. The guns were cast in a vertical position with the muzzle end upwards, very much in the same way as large water or gas pipes are now made. The effect of adding the "head" to the casting, being to add pressure to the fluid metal in the lower parts, thus expelling air and gases towards the surface, and into the "head," which was cut off before boring out the gun.

Rumford obtained a casting for a six-pounder brass gun from the military arsenal at Munich, and surrounded the "head,"

Digitized by Google

H, by a wooden trough, W T, containing about 18 lbs. of water, W, at 60° Fah. The machinery which rotated the gun, G, was driven by two powerful horses. A blunt boring tool, B T, which was made of steel, 3·5 inches diameter, was forced

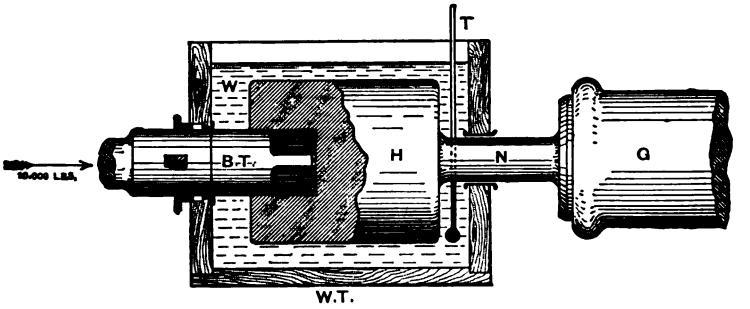

COUNT RUMFORD'S EXPERIMENT.

G	for Gun.	W T	for Wooden trough.
N	,, Neck.	W	,, Water.
H	,, Head.	T	,, Thermometer.
B T	,, Boring tool.		

against the head, H. This boring tool was held firmly in a rest, and pressed forward by means of a screw with an estimated pressure of 10,000 lbs. The result of this experiment was that, the heat generated by the friction between the blunt boring tool and the metal of the head, was partly conducted through the neck connecting the head with the gun, and partly absorbed by the water in the trough, so that the temperature of the water rose at the end of an hour to 107° F., in an hour and a-half to 142° F., in two hours to 178° F., and, finally, at the end of two and a-half hours the water boiled. Count Rumford said—"It would be difficult to describe the surprise and astonishment expressed in the countenances of the by-standers on seeing so large a quantity of water heated, and actually made to boil without any fire!" He adds—"By meditating on the results of these experiments, we are naturally brought to that great question which has so often been the subject of speculation, namely—What is heat? Is there any such thing as an igneous fluid? Is there anything that, with propriety, can be called caloric?" And, further—"It is hardly necessary to add that anything which an insulated body or system of bodies can continue to furnish without limitation, cannot possibly be a material substance; it appears to me to be extremely difficult, if not impossib

Digitized by Google

form any distinct idea of anything capable of being excited, and communicated in the manner heat was excited, and communicated in these experiments except it be motion."

Davy's experiment on the melting of ice by friction, announced by him in 1799, in his first published work, entitled—*An Essay on Heat, Light, and Combinations of Light*, was regarded at the time as a complete refutation of the materialistic doctrine of heat.

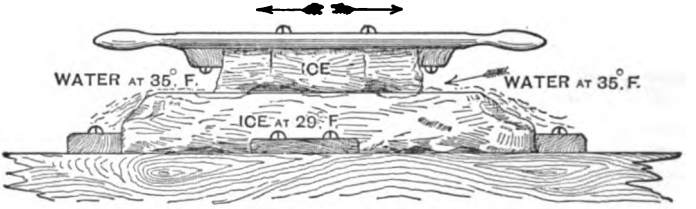

SIR HUMPHREY DAVY'S EXPERIMENT.

In an atmosphere at a temperature of 29° F., he rubbed together two small slabs of ice with the result (as shown in the fig.) that the ice was melted at the surfaces of contact, producing water at a temperature of 35° F. Now, as we saw in Lecture IV., a mass of water contains an absolute quantity of heat greater than an equal mass of ice, and it is, therefore, impossible to account for the presence of the increased temperature on the assumption that heat is a material substance. Davy said—"The immediate cause of the phenomenon of heat is motion, and the laws of its communication are precisely the same as the communication of the laws of motion."

Maxwell, in his *Theory of Heat*, p. 306, says—"The molecules of all bodies are in a state of continual agitation. The hotter the body is, the more violently are its molecules agitated."

Joule's experiments, carried out between 1840 and 1849, recalled the attention of scientists to Rumford and Davy's doctrine regarding the nature of heat, and gave us the means of estimating with exactness the quantity of work required to generate a certain quantity of heat.

We shall describe only two of Dr. Joule's famous experiments, and for a complete list of them we refer the student to Sir William Thomson's article on "Heat," in *The Encyclopædia Britannica*, 1880, p. 34.

Dr. Joule filled a copper tube with a fusible metal or alloy, F M (such as that used by the printers in making stereotype castings of types), which fuses at a low temperature, and

Digitized by Google

revolved the tube rapidly between the poles, N, S, of a strong electro-magnet, E M. The result of this was that the temperature of the alloy rose in a few minutes to the melting point, and the alloy could be poured from the copper tube. What agency was at work to fuse the metal? There was no friction between the revolving tube and any other part of the mechanism, for the tube rotated quite clear of the poles in the space between them; neither was it due to any friction from the spindle carrying the copper tube, for, if the battery or dynamo was disconnected (and thus no magnetism evoked) the tube might be revolved at the same speed as before, without any observable rise in temperature in the alloy. One circumstance was, however, made very apparent, viz., that it required much less effort to revolve the tube in the latter case than in the former, and herein lies the key to the whole secret.* A certain proportion of the power devoted to revolving the tube between the magnetised poles is expended in creating electric currents in the copper tube, and in the metal contained therein. These currents agitate and vibrate the molecules of the metal so very rapidly amongst themselves, that heat results from the forces at work overcoming the inter-molecular friction.

To prove that electric currents are so generated, we have only to cite the case of the now well-known Dynamo, where the copper

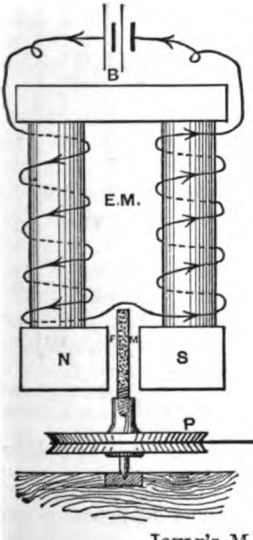

JOULE'S MAGNETO-ELECTRIC EXPERIMENT.

* This experiment is shown to my class by means of the small dynamo belonging to the College of Science and Arts driven by one or two students. The difference in the effort required by them to drive the dynamo, or to revolve the metal tube in the two cases, is thus brought home to them in a manner quite unattainable by any mere description or diagram.

INDEX.

B for Battery or dynamo.
E M ,, Electro-magnets.
N, S ,, North and south poles.
F M ,, Fusible metal in a copper tube.
P ,, Pulley.
T W ,, Turn wheel.

Digitized by Google

wires forming the armature, when revolved between the powerful magnetic poles, have strong currents excited in them; and to show that such currents are capable of producing heat, we have only to pass them through a thin metal wire or an incandescent lamp, with the result that the wire is heated to a white heat, or even fused, and the carbon filament made to glow with a brilliant incandescence.

We have in this experiment of Dr. Joule's a beautiful example of the double conversion of energy, viz., (1) mechanical energy into electrical energy, and (2) electrical energy into heat energy.

Joule's favourite experiment was the conversion of work into heat by the stirring of water. He arranged his apparatus in a manner similar to that shown in the figure.

A known weight, W, was allowed to fall through a known height, and in doing so to revolve vanes or paddles, R V, inside

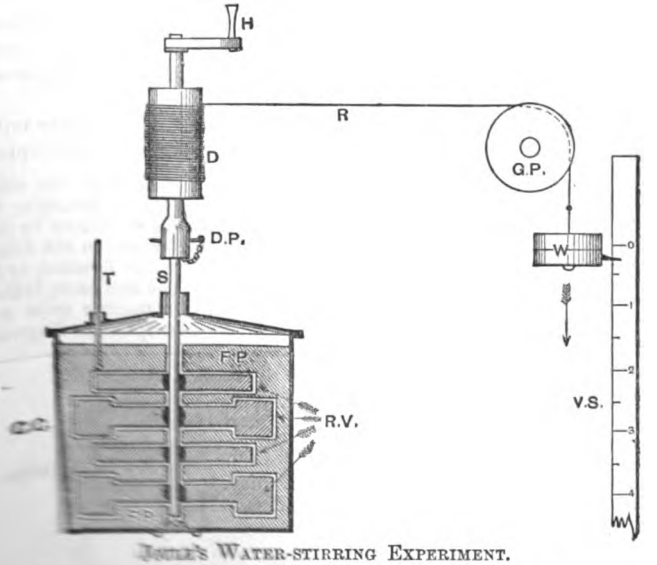

JOULE'S WATER-STIRRING EXPERIMENT.

Vertical scale in feet.

C C for Copper cylinder.
T ,, Thermometer.
R V ,, Revolving vanes or paddles (8 sets).
F P ,, Fixed plates (4 sets).
D P ,, connecting pin.

Digitized by Google

a copper cylinder, C C, containing a known weight of water; thus churning the water against the fixed plates or stationary screens, F P. The effect of this churning was to raise the temperature of the water, by imparting to it a certain quantity of heat, depending on the product of the weight into the space through which it fell, or the foot-pounds of work expended. We need not enter into the many details of Dr. Joule's carefully conducted experiments, whereby he eliminated from his results the effect of friction in the guide pulley, G P, as well as the effects of radiation and conduction of heat to or from the apparatus during the time of the experiment, &c. It will suffice to give his final result and an example.

The British Association in 1870 requested Joule to reinvestigate the subject for the purpose of giving greater accuracy to the determinations by his fluid friction method, with the final result of proving that 772·43 *foot-pounds (at the latitude of Manchester) are equal to the quantity of heat required to warm from* 60° *to* 61° *Fah. a pound of water weighed in vacuum.* This has been termed "Joule's Mechanical Equivalent of Heat," or, shortly, "Joule's Equivalent," and is denoted by the letter, J, and in round numbers we say, 1 *British thermal unit* = 772 *ft.-lbs.* Reduced to the centimetre gramme second or (C.G.S.) system, it is equivalent to about 42 million "ergs" or units of work for one gramme of water raised in temperature from 0° to 1° C.

For instance, suppose that, with Joule's apparatus we had a weight of 77·2 lbs., and allowed it to fall through a height of 10 feet, and in doing so, the mechanical work (772 ft.-lbs) would be converted into heat by churning 1 lb. of water at 60° F., we should find (if all extraneous losses were avoided) that the water had risen in temperature to 61° F., when the weight passed the 10th foot; or, if we take 1 lb. of water at 60° F., and raise its temperature 1° F., by any method whatever, the quantity of heat imparted to it (viz., 1 thermal unit), if converted into mechanical energy by a perfect heat engine, would perform 772 ft.-lbs. of work, or raise 772 lbs. 1 foot.

First Law of Thermo-dynamics.—*Heat and work are mutually convertible, and Joule's equivalent is the rate of exchange.*

The importance of this mutual relation between *heat* and *work*, cannot be too strongly impressed on the student at the very outset of his studying steam and the steam engine. In this lecture it has been shown, that the expenditure of so many *units of work* produces under the circumstances noted, an exact and unvarying equivalent of so many *units of heat*; and we shall see in future lectures, how the expenditure of so many *units of heat* produces an equivalent in *units of work*.

A familiar illustration of the foregoing principle of the mutual convertibility of heat and work is that of the Locomotive Engine. In the furna-

Digitized by Google

we have the production of heat by the combustion of coal. A proportion of this heat is imparted to the water in the boiler thus raising steam. The steam on being admitted to the cylinders parts with a portion of its heat in the act of doing the work of propelling the pistons, and thus moving the train. Again, when the train is nearing a station the steam is shut off, and the brakes applied. Then the stored work is converted into heat, which may be observed by sparks issuing at the brakes and by feeling the increased temperature of the brakes, wheels, and rails.

Example I.—Suppose a locomotive burns 6 lbs. of coal per horse-power per hour, and that every pound of coal burned in the furnace gives up to the water in the boiler 10,000 British units of heat, we have—

$$6 \text{ lbs.} \times 10{,}000\ u = 60{,}000 \text{ units of heat per H.P. per hour.}$$

But— 1 H.P. = 33,000 ft. lbs. per minute, or
$= 33{,}000 \times 60' = 1;\ 980{,}000$ ft.-lbs. per hour

And— 772 ft.-lbs. = 1 unit of heat.

$$\therefore \frac{1;\ 980{,}000}{772} = 2567{\cdot}2 \text{ units of heat converted into work every hour.}$$

Consequently— $60{,}000\ u : 2567{\cdot}2\ u :: 100 : x = 4{\cdot}27$,

Or the locomotive only converts 4·27 per cent. of the total heat generated in the furnace into its equivalent of work in the cylinder.

Example II.—Suppose that the energy of the train when the brakes are put on is equal to 16; 500,000 ft.-lbs.

Then, $16;\ 500{,}000 \div 772 = 21{,}373$ units of heat, or an amount of heat is generated at the brakes, wheels, and rails, &c., which would raise 213·73 lbs. of water 100° F.

Note.—We thus see from these two examples that the transformation from work into heat is more easy and complete than from heat into work.

Digitized by Google

LECTURE VI.—QUESTIONS.

1. Give free-hand sketches with index of parts, and a description in *your own* words of Rumford's, Davy's, and Joule's experiments.

2. State in your own words what you consider heat to be, and give Joule's mechanical equivalent for one British thermal unit.

3. How has the work done in raising the temperature of a pound of water through one degree been ascertained? A pound of coal gives out during combustion, 12,000 units of heat; how much work in foot-pounds could be done per pound of coal burned, if there were no waste? *Ans.* 9,264,000 ft.-lbs.

4. It is estimated that every pound of average steaming coal burned in the furnace of a boiler gives out 13,000 units of heat. It is found that a good compound engine and boiler requires 2 lbs. of coal per hour per indicated horse-power. What is the efficiency of the combined boiler and engine? *Ans.* 9·86 per cent.

5. Give another illustration of the first law of thermo-dynamics than that in the lecture, and work out an arithmetical example, and thus show that the transformation from mechanical work into heat is much more complete and efficient than from heat into work.

6. Define a unit of heat. A steam engine indicates 25 H.P., how many units of heat does it convert into useful work per minute? (*Adv. S. and A. Exam.*, 1888.)

Digitized by Google

LECTURE VII.

CONTENTS.—Sensible and Latent Heats of Water and Steam—Temperature and Pressure of Steam—Regnault's Experiments and Table of his results.

Sensible and Latent Heats of Water and Steam.—Hitherto we have dealt with heat when imparted to or abstracted from bodies as indicated by a rise or fall of temperature in the body. It has been customary to call this condition *sensible heat;* but there are exceptional cases in which temperature does not vary in a mass of matter when heat is communicated to it, from, or taken from it, to, external matter. For instance, when the body is ice at the melting point, heat communicated to it does not raise its temperature above 32° F., or, if the body be water at the boiling point in the open air, heat slowly communicated to it, in however great a quantity, does not raise its temperature above 212° F., at the normal pressure of the atmosphere. This heat is termed *latent heat.*

A short account of Professor Black's well-known experiments carried out about 1762, will serve to illustrate the difference between what is termed the "sensible" and the "latent" heat of a substance.

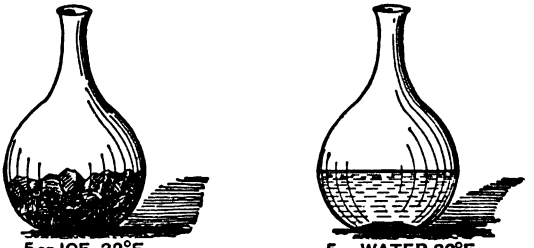

BLACK'S EXPERIMENT ON LATENT HEAT OF WATER.

Black procured two glass flasks, in one of which he placed 5 ozs. of ice at 32° F.,* and in the other 5 ozs. of water at the same

* The ice was beginning to melt, and his estimate of the temperature at the surface was 33° F.

Digitized by Google

temperature. He suspended them within a short distance of each other in a room which remained at a uniform temperature of about 47° F. He observed that in *one* half-hour the water increased in temperature by 7° F., but that it took *twenty* half-hours for the whole of the ice in the other flask just to become melted, and he reasoned thus—that from the time required the amount of heat which had entered the ice must have been *twenty* times as much as that which entered the water. He, therefore, computed that the *latent heat* of water must be 7×20 (half-hours) = 140.

Another experiment of Black's was that of placing a lump of ice in an equal weight of water at 176° F., with the result that when the whole of the ice had melted, the temperature was no greater than that of water just ready to freeze. Therefore, assuming the final temperature of the mixture to have been 33° F., we have $176 - 33 = 143$, as the amount of heat required to melt the ice, or *the latent heat of water*.

In this estimate he was very near the truth; for, even at the present day the mean results of some of the best experimenters appears to be, that 143 British thermal units of heat are absorbed, or become latent, in the conversion of 1 lb. of ice into water at the same temperature; and, consequently 143 B.T.U., are given out or let free in the conversion of 1 lb. of water at 32° F., into ice at the same temperature.*

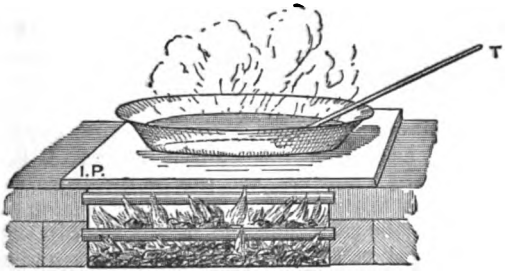

BLACK'S EXPERIMENT ON THE LATENT HEAT OF STEAM.

Black's third experiment consisted in placing a flat tin dish on a hot plate over a fire; into this plate he put a small quantity of water at 50° F., and observed that after 4 minutes the water

* The latent heat of water by the Centigrade scale is 79·4 for $\frac{143 \times 5}{9}$ [illegible] 79·4, say 79 units of heat required to convert 1 lb. of ice at 0° C., in[illegible] of water at the same temperature.

Digitized by Google

began to boil, and in 20 minutes more it had all evaporated. Now, since the water increased by $(212° - 50°) = 162°$ in 4 minutes, he reasoned that it must have been receiving heat at the same rate throughout the experiment, or that, in 20 minutes it had absorbed five times as much as in the first 4 minutes without any apparent rise in temperature as indicated by the thermometer, or, $5 \times 162 = 810$—Black's estimate of the latent heat of steam.

In this last estimate Black was incorrect, as might be expected, from the rough nature of his experiment. It has since been found that the *latent heat of steam* at atmospheric pressure is 966·6. In other words, it requires 966·6 British thermal units of heat to convert 1 lb. of water at 212° F., into steam at the same temperature, or 1 lb. of steam at 212° F., gives out 966·6 B.T.U., in being condensed into water at the same temperature.*

The following definition of sensible and latent heat will now be quite clear:—

"Heat given to a substance, and warming it, is said to be *sensible* in the substance. Heat given to a substance, and *not* warming it, is said to become *latent*" (*Sir Wm. Thomson*).

Latent heat is the quantity of heat which must be communicated to unit mass of† a body in a given state, in order to convert it into another state without changing its temperature (*Maxwell*).

Temperature and Pressure of Steam.—When water is confined in a closed vessel, and heated, the pressure of the vapour contained therein continually increases. The precise temperature which corresponds to any particular pressure, has been made the subject of very careful inquiry by Regnault and others. Before quoting Regnault's results, we shall illustrate these phenomena by means of a simple apparatus, termed Marcet's boiler.

On applying heat from the Bunsen burner, B B, steam is generated from the water, W, and the temperature as it rises is noted by the thermometer, T. Simultaneously the column of mercury rises in the tube, and the height from the free surface of the mercury may be read off (roughly) on the graduated scale, G S. When the temperature has arrived at 233° F., the mercury will be observed to have risen about 15 inches, corresponding to

* The Latent Heat of Steam by the Centigrade scale, is, therefore, $\frac{966·6 \times 5}{9} = 537$; or, 537 times the quantity of heat absorbed in raising 1 lb. of water by 1° C.

† I have added the words (unit mass of) to Maxwell's definition, because it appears deficient without them. When we speak of 143 as the latent heat of water, and 966 as the latent heat of steam, it is understood that 143 and 966 units of heat are required respectively for every 1 lb. (or unit of mass) to change the state from solid to liquid, and from liquid to gaseous.—*A. J.*

Digitized by Google

a pressure of 7·4 lbs. (half an atmosphere), or 22 lbs. absolute; and when the temperature arrives at 250° the mercury will have risen to about 30 inches, corresponding to a pressure of 14·7 lbs. on the square inch (1 atmosphere), or 29·4 lbs. absolute (*i.e.*, from zero pressure, or what would correspond to a perfect vacuum).

If our glass tube had been longer, and the supply of mercury in the bottom of the boiler sufficient, we might have gone on applying heat and registering still higher pressures with their corresponding temperatures, but the limited experiment has been sufficient to show roughly, that a rise in temperature cannot take place without a corresponding rise in pressure. Mercurial gauges, such as that in the Marcet's boiler, were much used to register the pressure of steam in steam boilers, before the introduction of the Bourdon gauge. (See our Elementary Manual, Lecture XI.)

INDEX.

BB for Bunsen burner.
MB ,, Marcet's boiler.
M ,, Mercury.
W ,, Water.
SS ,, Steam space.
T ,, Thermometer in S S.
GT ,, Glass tube, about 35 in. long.
GS ,, Graduated scale.
C ,, Cock.

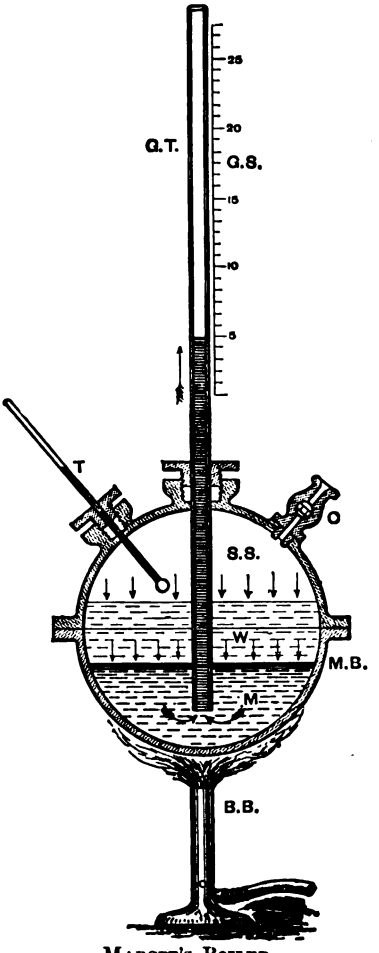

MARCET'S BOILER.

Regnault's Experiments.—Our knowledge of the proper steam is chiefly derived from experiments made by Regn the Paris observatory for the French Government in 1847.

Digitized by Google

were conducted with the greatest care, and involved immense labour. It is not necessary here to enter into any minute detail of the apparatus he used, but, generally speaking, it consisted of a boiler containing, when half full, about 33 gallons of water, a condenser of suitable dimensions to condense the steam as fast as it was formed, and an air chamber three times the size of the boiler provided with force pumps by means of which any desired pressure could be produced at pleasure. Pressures were measured by means of a column of mercury open to the atmosphere—an arrangement admitting of greater accuracy than any other method, but involving the manipulation of a column of mercury some 50 feet in height, when registering the very high pressures to which he went, viz., over 400 lbs. on the square inch. The air chamber and condenser enabled any desired pressure to be maintained for any length of time. For his more accurate measurements of temperature he used an air thermometer.

Numerous formulæ have been devised for connecting algebraically the relation subsisting between the temperature and the pressure of *saturated steam*. Many of them are defective in as far as they only apply to a limited range,* of which the following is one of the best of these approximate formulæ, as it is nearly correct for *absolute* pressures between 6 and 60 lbs., and it may be also used for pressures between 60 and 120 lbs., by adding 1 to the results.

$$p = \left(\frac{t + 40}{147}\right)^5$$

When p stands for the absolute pressure in lbs. per sq. in.
t „ „ temp. of the boiling point in degrees F.

$$\text{Therefore,} \qquad t = 147\sqrt[5]{p} - 40$$

Which is easily worked out by logarithms for any particular case, but the following, as given by Prof. Rankine, is best—

$$\log.\ p = A - \frac{B}{\tau} - \frac{C}{\tau^2}$$

Where A, B, and C are constants, and τ, the absolute temperature of the boiling point $= t + 460$ (see Lecture XI.)

The inverse formula for finding, τ, when you know p, is

$$\tau = 1 \div \left\{ \sqrt{\left(\frac{A - \log.\ p}{C} + \frac{B^2}{4C^2}\right)} - \frac{B}{2C} \right\}$$

* Rankine's formulæ, which represents Regnault's experimental results, very closely refers to the *absolute temperatare*, or −460 F. (see Lecture XII.)

Digitized by Google

Where

A	Log. B	Log. C	$\frac{B}{2C}$	$\frac{B^2}{4C^2}$
6·1007	3·43642	5·59873	0·003441	0·00001184

Students should plot out a curve from the following table, representing graphically the relation between pressure and temperature. To do so, set off a scale of temperatures on a horizontal line, and on a vertical line starting from the same point plot the corresponding pressures *to the same scale*. Draw vertical lines from each of the former points, and horizontal lines from each of the latter. Connecting the points of intersection, we have a curve, which shows at a glance how the pressures increase more rapidly than the temperatures. See Appendix, p. 394.

TABLE I.—PROPERTIES OF SATURATED STEAM FROM 32° TO 212° F.*

Temperature.	Pressure.		Temperature.	Pressure.	
	Inches of Mercury.	Lbs. per Square Inch, Absolute.		Inches of Mercury.	Lbs. per Square Inch, Absolute.
Fahrenheit	Inches.	Lbs.	Fahrenheit	Inches.	Lbs.
32°	·181	·089	120°	3·430	1·685
35	·204	·100	125	3·933	1·932
40	·248	·122	130	4·509	2·215
45	·299	·147	135	5·174	2·542
50	·362	·178	140	5·860	2·879
55	·426	·214	145	6·662	3·273
60	·517	·254	150	7·548	3·708
65	·619	·304	155	8·535	4·193
70	·733	·360	160	9·630	4·731
75	·869	·427	165	10·843	5·327
80	1·024	·503	170	12·183	5·985
85	1·205	·592	175	13·654	6·708
90	1·410	·693	180	15·291	7·511
95	1·647	·809	185	17·044	8·375
100	1·917	·942	190	19·001	9·335
105	2·229	1·095	195	21·139	10·385
110	2·579	1·267	200	23·461	11·526
115	2·976	1·462	205	25·994	12·770
			210	28·753	14·126
			212	29·922	14·700

* From D. K. Clark's *Rules, Tables, and Data:* Blackie & Son.

Digitized by Google

TABLE II.—PROPERTIES OF SATURATED STEAM.

Absolute Pressure per Square Inch.	Temperature in Fahrenheit Degrees.	Absolute Pressure per Square Inch.	Temperature in Fahrenheit Degrees.	Absolute Pressure per Square Inch.	Temperature in Fahrenheit Degrees.	Absolute Pressure per Square Inch.	Temperature in Fahrenheit Degrees.
Lbs.	Fahr.	Lbs.	Fahr.	Lbs.	Fahr.	Lbs.	Fahr.
1	102·1	44	273·0	88	318·6	132	348·3
2	126·3	45	274·4	89	319·4	133	348·9
3	141·6	46	275·8	90	320·2	134	349·5
4	153·1	47	277·1	91	321·0	135	350·1
5	162·3	48	278·4	92	321·7	136	350·6
6	170·2	49	279·7	93	322·5	137	351·2
7	176·9	50	281·0	94	323·3	138	351·8
8	182·9	51	282·3	95	324·1	139	352·4
9	188·3	52	283·5	96	324·8	140	352·9
10	193·3	53	284·7	97	325·6	141	353·5
11	197·8	54	285·9	98	326·3	142	354·0
12	202·0	55	287·1	99	327·1	143	354·5
13	205·9	56	288·2	100	327·9	144	355·0
14	209·6	57	289·3	101	328·5	145	355·6
14·7	212·0	58	290·4	102	329·1	146	356·1
15	213·1	59	291·6	103	329·9	147	356·7
16	216·3	60	292·7	104	330·6	148	357·2
17	219·6	61	293·8	105	331·3	149	357·8
18	222·4	62	294·8	106	331·9	150	358·3
19	225·3	63	295·9	107	332·6	155	361·0
20	228·0	64	296·9	108	333·3	160	363·4
21	230·6	65	298·0	109	334·0	165	366·0
22	233·1	66	299·0	110	334·6	170	368·2
23	235·5	67	300·0	111	335·3	175	370·8
24	237·8	68	300·9	112	336·0	180	372·9
25	240·1	69	301·9	113	336·7	185	375·3
26	242·3	70	302·9	114	337·4	190	377·5
27	244·4	71	303·9	115	338·0	195	379·7
28	246·4	72	304·8	116	338·6	200	381·7
29	248·4	73	305·7	117	339·3	210	386·0
30	250·4	74	306·6	118	339·9	220	389·9
31	252·2	75	307·5	119	340·5	230	393·8
32	254·1	76	308·4	120	341·1	240	397·5
33	255·9	77	309·3	121	341·8	250	401·1
34	257·6	78	310·2	122	342·4	260	404·5
35	259·3	79	311·1	123	343·0	270	407·9
36	260·9	80	312·0	124	343·6	280	411·2
37	262·6	81	312·8	125	344·2	290	414·4
38	264·2	82	313·6	126	344·8	300	417·5
39	265·8	83	314·5	127	345·4	350	430·1
40	267·3	84	315·3	128	346·0	400	444·9
41	268·7	85	316·1	129	346·6		
42	270·2	86	316·9	130	347·2		
43	271·6	87	317·8	131	347·8		

Digitized by Google

TABLE III.—PROPERTIES OF SATURATED STEAM.

Absolute Pressures.	Boiling Point of Water and Temperature of Steam.	Total Heat from Water at 32° or Sensible and Latent Heat.	Latent Heat.	Volume of 1 lb.	Weight of 1 Cubic Foot.	Relative Volume or Cubic Feet of Steam from 1 Cubic Foot of Water.
Lbs. per sq. inch.	Fah.	Units of heat per lb.	Units of heat per lb.	Cubic feet	Lbs.	Cubic feet.
1	102·1	1112·5	1042·9	330·36	·0030	20600
2	126·3	1119·7	1025·8	172·08	·0058	10730
5	162·3	1130·9	1000·3	72·66	·0138	4530
10	193·3	1140·3	978·4	37·84	·0264	2360
Atmos. pres. 14·700	212·0	1146·1	965·2	26·36	·0380	1642
20	228·0	1150·9	952·8	19·72	·0507	1229
25	240·1	1154·6	945·3	15·99	·0625	996
30	250·4	1157·8	937·9	13·46	·0743	838
35	259·3	1160·5	931·6	11·65	·0858	726
40	267·3	1162·9	926·0	10·27	·0974	640
45	274·4	1165·1	920·9	9·18	·1089	572
50	281·0	1167·1	916·3	8·31	·1202	518
60	292·7	1170·7	908·0	7·01	·1425	437
70	302·9	1173·8	900·8	6·07	·1648	378
80	312·0	1176·5	894·3	5·35	·1869	333
90	320·2	1179·1	888·5	4·79	·2089	298
100	327·9	1181·4	883·1	4·33	·2307	270
110	334·6	1183·5	878·3	3·97	·2521	247
120	341·1	1185·4	873·7	3·65	·2738	227
130	347·2	1187·3	869·4	3·38	·2955	211
140	352·9	1189·0	865·4	3·16	·3162	197
150	358·3	1190·7	861·5	2·96	·3377	184
160	363·4	1192·2	857·9	2·79	·3590	174
170	368·2	1193·7	854·5	2·63	·3798	164
180	372·9	1195·1	851·3	2·49	·4009	155
190	377·5	1196·5	848·0	2·37	·4222	148
200	381·7	1197·8	845·0	2·26	·4431	141
210	386·0	1199·1	841·9	2·16	·4634	135
220	389·9	1200·3	839·2	2·06	·4842	129
230	393·8	1201·5	836·4	1·98	·5052	123
240	397·5	1202·6	833·8	1·90	·5248	119
250	401·1	1203·7	831·2	1·83	·5464	114

Digitized by Google

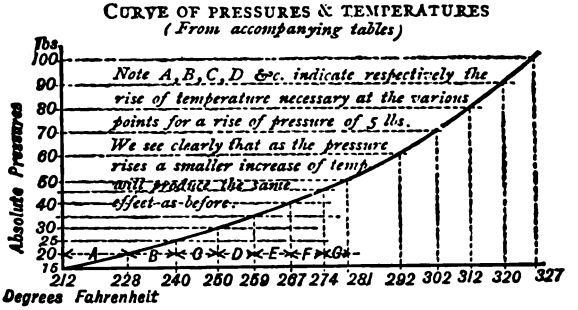

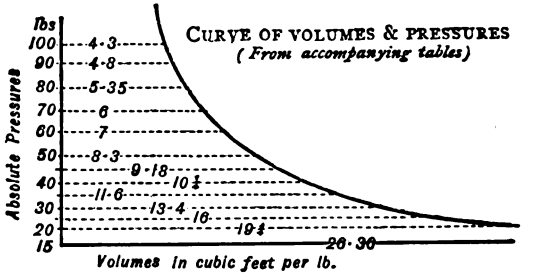

REMARKS ON TABLE III.

Saturated Steam is steam in contact with the water from which it is generated. Its physical condition is such, that it is ready on the smallest increase of pressure, or decrease of temperature, to yield some portion of liquid. For a given pressure there is one temperature and one density.

Absolute Pressures are pressures reckoned from a perfect vacuum as zero. Ordinary steam pressure, as measured by steam gauges, is converted into absolute pressure by adding 15 lbs. *N.B.*—In all questions relative to the expansion of steam (Boyle's law, &c.) absolute pressures are to be used.

Temperature.—The second column gives the temperature at which water boils under the given pressure, and the temperature of the steam produced. It also gives (nearly) the units of heat required to raise 1 lb. of water from 32° to boiling point under this pressure *when* 32 *is subtracted.*

Example.—1 lb. water at 120° raised to boiling point under 50 lbs. pressure. The units of heat required = 281 − 120 = 161 units.

Total Heat, or sum of Sensible and Latent Heat.—This was believed by Watt to be a constant quantity, but elaborate and careful experiments by Regnault have shown that it increases along with the temperature. The formula used in the table for any temperature, t, is:

$$\text{Total Heat, or } H = 1082{\cdot}4 + {\cdot}305\, t^{\circ}.$$

Latent Heat gets less at higher temperatures and pressures.

Relative Volume.—The last column gives the volume of steam generated under a given pressure compared with the volume of the water from which it is produced.

Digitized by Google

LECTURE VII.—QUESTIONS.

1. What is the distinction between sensible and latent heat?

2. Describe an experiment by which you could show that heat becomes latent when water is converted into steam.

3. What is meant by saying that the latent heat of steam is 966·6? Point out the sources of error in Black's experiment when he tried to find the latent heat of steam.

4. How would you ascertain the pressure of the vapour of water at a temperature above 212° F.? Describe some method of conducting the experiment.

5. When you speak of the "latent heat of steam," what property of steam do you refer to? State the numerical value of the latent heat of steam at 212° F. A pound of water at 212° F. is passed into 20 lbs. of water at 70° F., what is the final temperature? *Ans.* 76°·7.

6. From the table of Regnault's results, plot out a curve showing the rise in pressure of steam with increase of temperature.

7. How many pounds of ice at 32° F. will be converted into water at 40° F. by mixing it with 6 lbs. of water at 160° F.?

6 lbs. of water *gives* up 6 (160° − 40°) = 720 units.

1 lb. of ice *takes* up 143 + (40 − 32) = 151 ,,

∴ 720 ÷ 151 = 4·768 lbs.

8. Into 1 cwt. of water at 45° F. is poured 20 lbs. of water at 160° F., and then 4 lbs. of ice at 32° F. are added. What is the final temperature when the ice has just melted?

Water	112 (45° − 32°)	= +	1456 units of heat from 32° F.
Water	20 (160° − 32°)	= +	2560 ,, ,,
Ice	4 × 143	= −	572 to convert 4 lbs. ice into water.
Total	136 lbs. mixture =		3444 units left.

∴ 3444 ÷ 136 = 25·32 above 32° or 57°·32 F.

9. If the heat which just melts 8 lbs. of ice at 32° F. were applied to 30 lbs. water at 60° F., to what temperature would the water rise?

8 × 143 = 1144 units of heat required to melt the ice.

Now, 30 lbs. of water raised 1° F. = 30 units of heat,

∴ 1144 ÷ 30 = 38°·13 F. of rise from 60° F. or 98°·13 F.

10. There are mixed together 200 lbs. of water at 100° F., 3 lbs. steam at atmospheric pressure, and 15 lbs. of ice at 32° F. What is the resulting temperature when all the ice is just melted?

The	200 lbs.	water	has +	13,600 *u*,	more than	water at 32° F.
,,	3 ,,	steam	,, +	3,438	,,	,, ,,
,,	15 ,,	ice	,, −	2,145	less	,, ,,
∴	218 ,,	mixture	,,	14,893	more	,, ,,

And 14,893 ÷ 218 = 68°·3 F. above 32 = 100°·3 F.

Digitized by Google

LECTURE VIII.

CONTENTS.—The successive effects produced by the continuous application of Heat to a piece of very cold Ice until Dissociation takes place—The boiling point of a Liquid—Experiment of Water boiling at pressures less than one Atmosphere—Use of large Air Pumps in connection with Condensers.

WE shall best understand the physical properties of steam and the results arrived at by Regnault, by considering, in the first place, the several changes which take place in water—from its solid condition, ice, until it becomes dissociated under the continuous application of heat.

These figures are purely imaginary and not to scale.

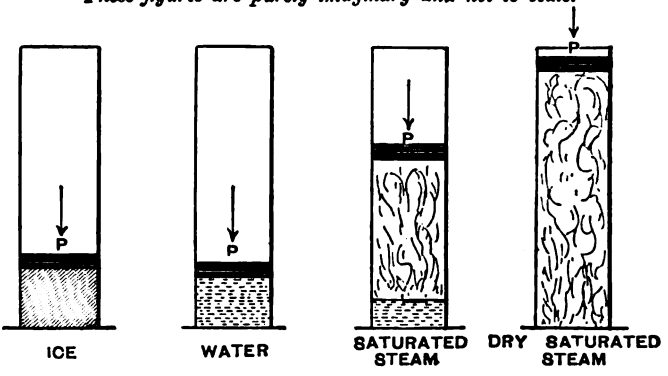

Referring to the figure, suppose that we put 1 lb. of very cold ice in the bottom of an open-mouthed cylinder, and place a piston on it, which, together with the pressure of the atmosphere, exerts a pressure of p lbs. on the square inch.

STAGE 1.—On the application of heat to the bottom of the cylinder, the ice is gradually heated until it arrives at 32° F.

STAGE 2.—The temperature now remains constant until all the ice melts and becomes converted into water. The bulk of the water being less than that of the ice from which it is formed, the piston descends a very little, as we already noticed

Digitized by Google

in Lecture VII., 143 units of heat must be communicated to the 1 lb. of ice at 32° F. before it is all melted into water at 32° F.

STAGE 3.—Still applying heat, the water increases in temperature while the bulk diminishes, until 39° F. is reached (the maximum density point of water); thereafter, the volume gradually increases, but in a very slight degree, with the rise in temperature, until a little above 212° F. is reached, the limiting temperature of the water depending on the pressure, p, lbs. on the square inch (see Regnault's tables). Had the pressure on the piston been nothing more than that due to the normal pressure of the atmosphere, viz., 14·7 lbs., corresponding to a barometric height of 29·9 inches, then the water would have been converted into steam at a temperature of 212° F.

STAGE 4.—The temperature remains stationary at that limit value, and the formation of steam commences, the piston rising as more and more of the water is evaporated. So long as any water remains at the bottom of the cylinder, we are producing what is called *saturated steam*, or wet steam. This is the condition of steam usually supplied to engines from ordinary boilers having small steam space or no steam dome.

STAGE 5.—When all the water in the bottom of the cylinder has been evaporated, and *just* when all the water or aqueous particles held in suspension with the steam have been converted into steam, we obtain *dry steam*, or what is sometimes termed *dry saturated steam;* then 966·6 units of heat must have passed into the contents of the cylinder, for, as we have already noticed in Lecture VII., 966·6 units of heat must be communicated to the 1 lb. of water before it is all converted into steam at 212° F. The ratio of the weight of dry steam to that of water held in suspension is termed the "dryness fraction." If x be the weight of dry steam, then $(1-x)$ is the weight of water held in suspension. When $\frac{9}{10}$ of the vapour is steam, then $\frac{1}{10}$ is water, or 10% of water is in suspension.

STAGE 6.—If more heat be added to the dry steam in the cylinder, the pressure, P, on the piston remaining the same, the temperature will again begin to increase, and we get what is termed *superheated steam*. The more it is heated, the more nearly do its properties approach to those of a perfect gas. If the top of the cylinder had been closed from the commencement of stage 3, the pressure would have risen with the temperature until the commencement of stage 6, in accordance with Regnault's tables, given at the end of last Lecture; but during stage 6 we communicate more heat to the steam than its pressure would indicate by the tables. Superheated steam is not now much used for engines, on account of its destructive action on the

Digitized by Google

packing of the glands, and working surfaces of the slide valve and cylinder. (See Lecture XIV.)

Stage 7.—Steam cannot be heated indefinitely without a molecular change taking place, termed *dissociation*, when it separates into constituent gases—hydrogen and oxygen. This action is practically carried out in the process of making "water gas," by blowing dry steam over very hot plates before carbonising it, ready for illuminating purposes.

Thus the successive effects produced by the continuous application of heat to a piece of very cold ice are:—

1. Heating ice up to 32° F.
2. Melting ice, absorption of latent heat, 143 units per lb.
3. Heating water up to boiling point.
4. Formation of saturated steam, no increase of temperature.
5. Formation of dry steam, due to the complete absorption of the latent heat, or 966·6 units per lb. of water.
6. Superheated steam, increase of temperature above stage 3.
7. Dissociation or formation of hydrogen and oxygen.
8. Heating, no further alteration of the physical state.

Boiling Point.—Before treating of the "total heat of evaporation," we shall digress a little to consider what is meant by the boiling point, or the temperature of ebullition.

The boiling point of any liquid is that point on the temperature scale, when the tension throughout its mass just overcomes the surrounding pressure. The temperature of the boiling point, therefore, depends directly on the *pressure* under which the liquid is evaporated, and the greater the pressure the higher the temperature at which it boils.

The boiling points of fresh water at different pressures are approximately as follows (compare this with Regnault's table, end of Lecture VII.):—

Under a pressure of	½	atmosphere,	123° Fah.
,,	¾	,,	150° ,,
,,	⅞	,,	179° ,,
,,	1	,,	212° ,,
,,	2	,,	249° ,,
,,	3	,,	273° ,,
,,	4	,,	291° ,,
,,	5	,,	306° ,,
,,	6	,,	319° ,,

It is thus clear that water will boil or give off steam far below, as well as far above, its normal boiling point, 212° F.

To illustrate this take a glass flask half full of water with a thermometer in it, heat it over a spirit lamp or Bunsen burner

Digitized by Google

until the water just begins to boil and the temperature, as registered by the thermometer, is 212° F. Now attach it, as shown, to an air-pump, A P, by a flexible india-rubber tube, and begin extracting the air. The water is observed to boil violently, although it may have cooled down to as low as 180° F. This plan of attaching it to the air-pump is much better than that of placing it under the glass-bell jar of the pump, as it permits the thermometer being easily seen after the moist steam has begun to rise.

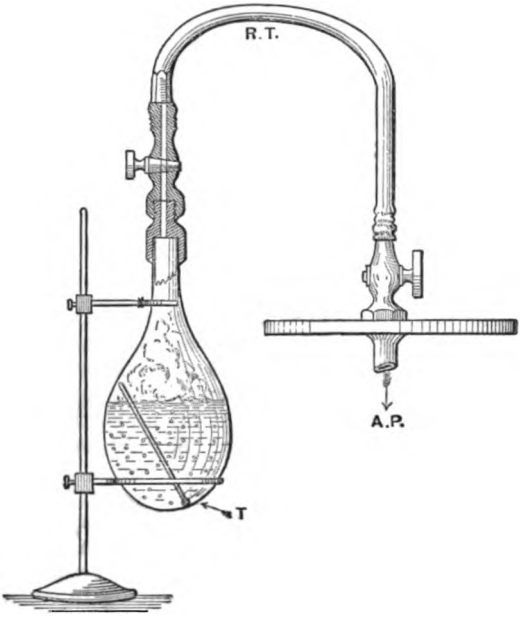

If an air-pump is not at hand, the following simple experiment will illustrate the fact equally well to a class:—After heating the water in the flask to 212° F., and letting it boil freely for a minute to expel the air, cork it up quickly and tightly, leaving a thermometer inside. Now pour cold water on the outside of the flask, the water will at once begin to boil, although the temperature may be now below 200° F. It ceases to boil, however, if you stop cooling it. Why? Because the tension of the vapour generated equals that of the natural tension of water; but condense this vapour by a second application

Digitized by Google

water, and again it begins to boil, even with the temperature below 180° F. A knowledge of these facts is most important to the engineer, for it shows him that in the condensers of large engines, he must provide air-pumps of sufficient capacity to carry off the steam vapour generated at even low temperatures. It was only last year that an acquaintance of the author's, over-

looking this point, put in a set of very small air-pumps to a pair of marine engines which he was constructing, under the impression (due to miscalculation) that all that was necessary was to lift the condensed water, and that marine engineers generally, were putting on air-pumps out of all proportion to the work to be done! He soon discovered his mistake, for, on the day of the trial trip, he could not keep up a vacuum above a few inches. In addition to the steam vapour which is generated at pressures below the atmospheric pressure, any air which may have come over with the steam at once expands on a reduction of pressure, and has to be sucked away at every stroke, otherwise it will spoil the vacuum. We shall refer to this point again when we come to treat of condensers and air-pumps.

The experiment of raising the boiling point by raising the pressure is easily done. Procure a flask, as in the former experiment, with a tight-fitting stop cock. Half fill the flask with water, heat it with the cock open until the water boils and all the air has been expelled, then shut the stop cock. The steam now generated rises in pressure and temperature. The increasing pressure raises the boiling point and thus stops the violent ebullition, unless heat is applied very rapidly. Allow the temperature to rise, say to 240° F., then slightly open the cock, ebullition is at once observed, although the pressure is equal to two atmospheres above a perfect vacuum.

Digitized by Google

LECTURE VIII.—QUESTIONS.

1. Describe in your own words the several effects which take place in succession on applying heat to a lump of ice enclosed in a cylinder. Distinguish between saturated steam, dry saturated steam, and superheated steam.

2. How much ice at 0° C. will be converted into water at 5° C. by mixing it with 10 lbs. of water at 80° C.? *Ans.* about 9 lbs.

3. The latent heats of 1 lb. of water and 1 lb. of steam are respectively 143 and 966·6 according to the Fah. scale; work out in full by proportion what they are according to the Cent. scale. *Ans.* 79·4 and 537.

4. How many British units of heat are required to raise 1 cubic foot of water (62·5 lbs.) from 15° C. to 100° C.? *Ans.* 9562·5.

5. What is the resulting temperature on mixing 20 cubic feet of water at 212° F. with 100 cubic feet at 10° C.? *Ans.* 77° F.

6. The diameter of a cylinder is 20 inches, steam is admitted at a pressure of 100 lbs. on the square inch; what is the total pressure in lbs.? *Ans.* 31,416 lbs.

7. Steam blows off at 60 lbs. pressure from a boiler by gauge, the barometer stands at 29 inches; what is the temperature of the water in the boiler? *Ans.* 307°·4 F.

8. Account for the use of larger air-pumps being used with condensing engines than would merely suffice to lift the weight of water in the condenser.

9. What is meant by the "dryness fraction," and how is it estimated?

10. How many units of heat would be absorbed in raising 18 lbs. of steam of atmospheric pressure from water at 65° F.? *Ans.* 20,044.

11. How much water at 55° F. could just be brought to the boiling point by the latent heat given up by 2 lbs. of steam at atmospheric pressure being condensed? *Ans.* $(966 \times 2) \div 157 = 12{\cdot}3$ lbs.

12. What are *saturated*, *superheated*, and *wet* steam respectively? Why is there a loss of efficiency in using wet steam? Define a thermal unit, and explain the method of measuring the latent heat of steam. (*Adv. S. and A. Exam.*, 1887.)

13. If one pound of Newcastle coal develops 12,000 units of heat by its complete combustion, how much water at 60° F. should be converted into steam at 212° F. by the consumption of 1 cwt. of such fuel, assuming that there is no loss of heat during the operation? (*Adv. S. and A. Exam.*, 1887.)

Digitized by Google

LECTURE IX.

CONTENTS.—Total Heat of Evaporation—Quantity of Water required for Condensation of Steam, with Examples.

Total Heat of Evaporation.—The total heat of evaporation is the sum of the sensible and the latent heats of evaporation, and is approximately a constant quantity for pressures near the atmospheric pressure.

The heat required to elevate the temperature of 1 lb. of water from the freezing point, 32° F., to the temperature of evaporation, is called the *sensible heat*,* and the additional heat required to evaporate it is termed the *latent heat* (see Lecture VII.)

The total heat of evaporation for water is, therefore, the quantity of heat in thermal units necessary to raise 1 lb. of water from the freezing point, 32° F., to the particular temperature at which it is being evaporated, and to evaporate it at that temperature.

Let H stand for the Total heat of evaporation in B.T.U.
S „ „ Sensible heat „ „
L „ „ Latent heat „ „
Then, H = S + L.

Now, since we have defined a unit of heat to be the quantity of heat necessary to raise 1 lb. of water by 1° Fah., the amount of heat imparted to 1 lb. of water, in raising its temperature from 32° F. to 212° F., must be (212 − 32) = 180 such units.† Therefore the *sensible heat* of steam at 212° F., is said to be 180 units per lb. or 180. Again, we saw, Lecture VII., that the *latent* heat of steam at 212° F. was in round numbers 966 units per lb., or 966.

*The reason for starting from the freezing point of water, and not from zero Fah., is that we thus avoid the introduction of the latent heat of water. Of course, if the water is of higher temperature than 32° F. to start with, the heat required to be applied to it to bring it up to the point of evaporation is correspondingly less.

†We here neglect, for the sake of simplicity, the addition to our former definition of this unit (see Lecture IV.)—"water at its maximum density point," and, therefore, the very slight difference in the sensible heat caused by the increase of the specific heat of water as it rises in temperature. This difference simply amounts to that between 180 units and 180·9.

Digitized by Google

GRAPHICAL REPRESENTATION OF THE CHANGES FROM ICE INTO WATER, AND WATER INTO STEAM AT ATMOSPHERIC PRESSURE, DUE TO THE ABSORPTION OF HEAT, WITH THE CORRESPONDING TEMPERATURES AND VOLUMES.

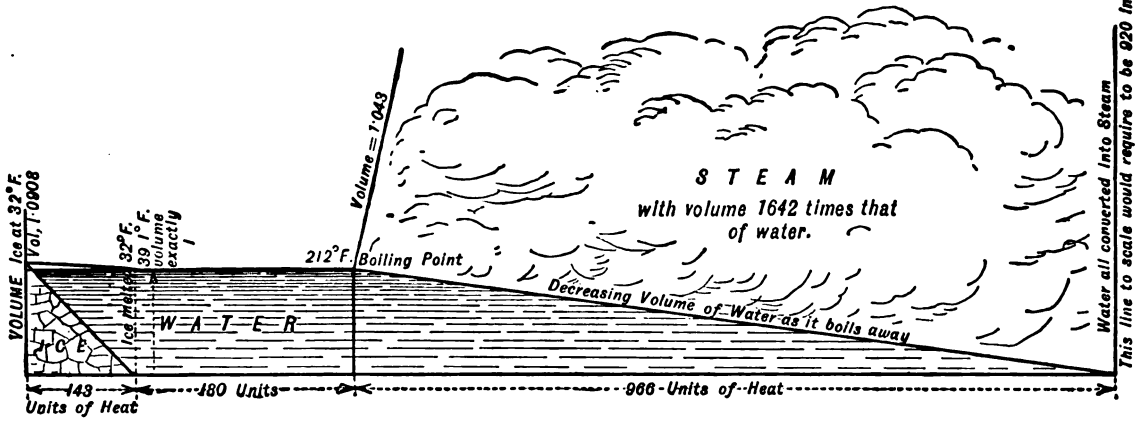

Explanation of Diagram.—Distances measured horizontally from the left indicate units of heat absorbed, while distances measured vertically indicate volumes. We commence with ice occupying a volume of 1·0908. The application of heat to the ice (which is supposed to be at 32° F.) immediately begins to melt it, and when 143 units per lb. have been absorbed, the whole of the ice is melted, and we have water occupying a volume 1·000127. The further application of heat causes the volume of this water first to decrease to 1 (at a temperature of 39°·1) and then again to increase to at boiling point. After this, the application of each unit of heat causes $\frac{1}{966}$ part of the water to pass away as and when 966 units per lb. have been absorbed the whole of the water has passed into steam, which now a volume 1642 times that of the water from which it was produced.

Digitized by Google

Therefore the *total heat* of steam at that temperature must be—

$$\begin{aligned} H &= S + L \\ &= 180 + 966 \\ &= 1146 \text{ Units of Heat.} \end{aligned}$$

If steam is generated at a higher temperature than 212° F., the sensible heat increases, and the latent heat decreases.

The following formula, deduced from Regnault's experiments, gives approximately the *latent heat* of steam produced at other temperatures Fah.:—

$$L = 966 - 0{\cdot}7\ (t - 212°).$$

Where L, is the latent heat, and t, the temperature of evaporation on Fahrenheit scale.

Consequently, the total heat of evaporation, at any temperature, t, must be—

$$\begin{aligned} H &= S + L \\ &= (t° - 32°) + 966 - 0{\cdot}7\ (t° - 212°) \\ &= 1082{\cdot}4 + 0{\cdot}3\ t°. \end{aligned}$$

For example.—Let us find from this equation the total heat of steam at 212° F. Then $t = 212°$ and $\cdot 3 \times 212 = 63{\cdot}6$, which, added to $1082{\cdot}4 = 1146$, the number we got before.

The following table gives approximately the sensible, latent, and total heats of evaporation of 1 lb. of steam up to a pressure of 7 atmospheres, *i.e.*, about 88 lbs. on the square inch above the atmosphere*:—

	S.	L.	H.
At pressure of 1 atmosphere, . .	180	966	1146
„ 2 „	217	940	1157
„ 3 „	241	923	1164
„ 4 „	259	910	1169
„ 5 „	274	900	1174
„ 6 „	287	891	1178
„ 7 „	298	883	1181

* From R. Sennett on *The Marine Steam Engine.*

Digitized by Google

We see from this table that, notwithstanding the decrease in the latent heat, *the total heat of evaporation* slowly increases. This point will be found to be of great importance in considering the expansive properties of steam, and one that will explain some curious phenomena connected therewith.

Quantity of Water required for Condensation.—We are now in a position to obtain a formula for determining the minimum weight of condensing water which must be directly mixed with 1 lb. of steam, in order that the mixture may be reduced to water at a certain temperature, or the temperature of the hot well.*

The following is theoretically true :—

The Total Heat before Mixture = the Total Heat after.

Now, let 1 lb. of steam at a temp. $t_1°$ be subjected to an injection of x lbs. of water at a temp. $t_2°$, and let the result be water at a temp. $t_3°$.

Then—*The Total Heat before Mixture = the Total Heat after.*

Total Heat of 1 lb. of Steam at $t_1°$.	+	Total Heat of x lbs. of water at $t_2°$.	=	Total Heat of $(x+1)$ lbs. of water at $t_3°$.
$1\ (1082{\cdot}4 + {\cdot}3t_1)$	+	$x\ (t_2 - 32)$	=	$(x + 1)\ (t_3 - 32)$.

If $t_1 = 212°$ Fah.—Then—

$$1146 + x\ (t_2 - 32) = (x + 1)\ (t_3 - 32).$$
$$1146 + xt_2 - 32x = (x + 1)t_3 - 32x - 32.$$

Take over the, $- 32$, and cancelling the, $- 32x$, from each side of the equation, we get—

$$1178 + x.t_2 = (x + 1)\ t_3;$$

$$\text{or, } x = \frac{1178 - t_3}{t_3 - t_2}.$$

N.B.—This 1178 in the above formula must not be taken as the total heat of steam at 212° F., but only the numerical outcome of the equation.

An example or two will illustrate the above rule and fix the principle in the memory, as well as clearly show the difference between the mixing of two quantities of water, and a quantity of steam and water. These questions are more easily performed on the Cent. than on the Fah. scale, as we shall see afterwards.

* In doing so we shall lay the foundation for the solution of the p[illegible] so frequently put in examination papers.

Digitized by Google

owing to the inconvenience of having to always subtract 32 at every turn on the Fah. scale, to reduce the temperatures to the starting point of water.

EXAMPLE.—If 1 lb. of water at 212° F. be mixed with x lbs. of water at 60° F., what is the value of x when the resulting temperature is 100° F.?

The Total Heat before Mixture = the Total Heat after.

1 lb. water at $212° + x$ lbs. water at 60°	$= (x+1)$ lbs. water at 100°
$1\,(t_1 - 32) + x\,(t_2 - 32)$	$= (x+1)\,(t_3 - 32)$
$1\,(212 - 32) + x\,(60 - 32)$	$= (x+1)\,(100 - 32)$
$180 + 28\,x$	$= 68\,x + 68$
$180 - 68$	$= 68\,x - 28\,x$
112	$= 40\,x$

$$\therefore\ x = \frac{112}{40} = 2{\cdot}8 \text{ lbs.}$$

Again—If 1 lb. of steam at 212° F. be mixed with x lbs. of water at 60° F., what is the value of x when the resulting temperature is 100° F.?

The Total Heat before Mixture = the Total Heat after.

1 lb. of steam at $212° + x$ lbs. of water at 60°	$= (x + 1)$ lbs. water at 100°
$1146 + x\,(t_2 - 32)$	$= (x + 1)\,(t_3 - 32)$
Or, $1178 + x\,t_2$	$= (x + 1)\,t_3$
*$1178 + 60\,x$	$= 100\,x + 100$
1078	$= 40\,x$

$$\therefore\ x = \frac{1078}{40} = 26{\cdot}95 \text{ lbs.}$$

We thus see the great effect of the latent heat of steam. It only requires 2·8 lbs. of water at 60° to produce the same temperature result on *water* at 212°, that 26·95 lbs. of water can do on *steam* at the *same* temperature.

* Or we may state it thus—

The steam *gives up* the same number of units of heat that the water *takes up*.

1 lb. steam *gives up* $(1178 - 100) = 1078$ units.

1 lb. water *takes up* $(100 - 60) = 40$ units.

$$\therefore\ x \text{ lbs. water} = \frac{1078}{40} = 26{\cdot}95.$$

Digitized by Google

LECTURE IX.—QUESTIONS.

1. If a pound of water at 212° F. be mixed with x pounds of water at 60°, what is the value of x when the resulting temperature is 120°? Again, if a pound of steam at 212° F. be mixed with y pounds of water at 60°, find y when the resulting temperature is 120°. Account for the difference between x and y. *Ans.* $x = 1{\cdot}53$ lbs.; $y = 17{\cdot}6$ lbs.

2. What is the latent heat of steam? If a quantity of steam weighing one pound, and at temperature of 212° F., is condensed in 100 lbs. of water at 60° F., what is the resulting temperature? *Ans.* 71°·06.

3. If 2 lbs. of steam at 212° F. are passed into 30 lbs. of water at 70° F., what is the temperature of the water at the end of the operation? *Ans.* 139°·2.

4. In a jet condenser the temperature of the condensing water is 60° F. and that of the entering steam is 193° F. Also the condenser remains at a temperature of 120°. Under these conditions find the weight of condensing water per pound of steam which enters the condenser. *Ans.* 17·53 lbs.

5. How many pounds of water at 50° F. must be mixed with 1 lb. of steam at atmospheric pressure to give a temperature of 105° F. to the mixture? *Ans.* 19·5 lbs.

6. If there pass at the same time into the condenser, and from thence into the hot-well, 2 tons of water at 55° F. and 1·5 cwt. of steam at atmospheric pressure, what will be the resulting temperature? *Ans.* 95°·6 F.

7. Hot-well 105° F., injection 53°, and steam at atmospheric pressure. Required number of pounds of steam condensed by 4 cb. ft. of the injection water. *Ans.* 12·1 lbs.

8. If there pass into the condenser at the same time 2 lbs. steam at atmospheric pressure and 50 lbs. water at 50° F., find the temperature of hot-well. *Ans.* 93°·38 F.

9. Using only 12 lbs. water per lb. of steam at 212° F., find the temperature of the hot-well when injection water 60° F. *Ans.* 146° F.

10. From 1886 Steam Examination. Temperature of injection water 60° F., temperature of hot-well 100° F., latent heat of exhaust steam 1016 units, its temperature being 140° F.; find the pounds of injection water required per pound of steam condensed. *Ans.* 26·4 lbs.

11. The cylinder of an engine is 74 inches in diameter, and the stroke is 5·5 feet; what is the capacity of the cylinder in cubic feet? How many pounds of water must be evaporated in order to fill the cylinder with steam at a pressure of 15 lbs. absolute (atmospheric pressure), it being given that steam of that pressure occupies 1,642 times the volume of the water from which it is generated? *Ans.* 161·77 cubic feet; 6·16 lbs.

Digitized by Google

LECTURE X.

CONTENTS.—Examples of the Quantity of Water required for Condensation of Steam with a Jet Condenser continued—Also with a Surface Condenser—Tube Surface required under different conditions.

Now, let us try the same two questions given in the last Lecture, but on the Cent. scale, if for no other purpose than to observe the great advantage of using that scale.

Either referring to our comparative table of thermometer scales, or by calculation (Lecture III.), we observe that—

212° F. corresponds to 100° C.
60° F. „ 15°·5 C.
100° F. „ 37°·7 C.
and 1146 units on F. scale = 637 on C. scale.

∴ Taking the first example of 1 lb. of water at 100° C., mixed with x lbs. of water at 15°·5 C., the resulting temperature being 37°·7 C., &c.

The Total Heat before Mixture = the Total Heat after.

1 lb. water at 100° C. + x lbs. at 15°·5 C. } = $(x + 1)$ lbs. water at 37°·7 C.

$$1 \times t_1 + x\,t_2 = (x + 1)\,t_3$$
$$100 + 15{\cdot}5\,x = (x + 1)\,37{\cdot}7$$
$$100 - 37{\cdot}7 = 37{\cdot}7\,x - 15{\cdot}5\,x$$
$$62{\cdot}3 = 22{\cdot}2\,x$$
$$\therefore x = \frac{62{\cdot}3}{22{\cdot}2} = 2{\cdot}8 \text{ lbs.}$$

Again, taking the second example of 1 lb. of steam at 100° C., mixed with x lbs. of water at 15°·5 C., the resulting temperature being as before 37°·7 C.

The Total Heat before Mixture = the Total Heat after.

1 lb. steam at 100° C. + x lbs. water at 15°·5 C. } = $(x + 1)$ lbs. water at 37°·7 C.

$$637 + x\,t_2 = (x + 1)\,t_3$$
$$637 + 15{\cdot}5\,x = 37{\cdot}7\,x + 37{\cdot}7$$
$$599{\cdot}3 = 22{\cdot}2\,x$$
$$\therefore x = \frac{599{\cdot}3}{22{\cdot}2} = 26{\cdot}9 \text{ lbs.}$$

If we had taken round numbers on the Cent. scale, as we did on the Fah., the advantage would have been still more apparent.

Digitized by Google

We give another example on the subject of our last lecture more in accordance with what takes place in actual practice. The points we have hitherto considered were meant to lead up to this one. We shall again refer to this question of the quantity of water required for condensation when we come to compare the relative efficiences of jet and surface condensers.

EXAMPLE.—A vacuum gauge placed in the exhaust pipe of a low-pressure cylinder indicates 26 inches, while the mercurial barometer stands at 30 inches. The temperature of the hot-well is 100° F., what is the minimum weight of injection water at 60° F. that will produce this result per pound of steam entering the condenser?

Let 30 in. by barometer correspond to 15 lbs. absolute;

Then, $30 \text{ in.} : 26 \text{ in.} :: 15 : y$

$$y = \frac{15 \times 26}{30} = 13 \text{ lbs. } \textit{vacuum.}$$

Therefore, a 26-inch vacuum corresponds to a back pressure of $(15 - 13) = 2$ lbs. absolute. Now, 2 lbs. absolute pressure corresponds closely to a temperature of 126° F. $= t_1$ (see p. 62).

The Total Heat before Mixture = the Total Heat after.

Referring back to our formula in last lecture.

$$\begin{aligned} 1 \text{ lb. } (1082{\cdot}4 + {\cdot}3t_1) + x(t_2 - 32) &= (x + 1)(t_3 - 32) \\ 1\,(1082{\cdot}4 + {\cdot}3 \times 126) + x(60 - 32) &= (x + 1)(100 - 32) \\ 1120{\cdot}2 + 28x &= 68x + 68 \\ 40x &= 1052{\cdot}2 \end{aligned}$$

$$\therefore x = 26{\cdot}3 \text{ lbs.}$$

It will thus be clear on comparing this result with the last question in Lecture IX., that almost the same weight of water is required per pound of steam, whether the steam exhausts at atmospheric pressure or not, for it is the 966 units of *latent heat* which the injection water has to contend with, more than the few units of *sensible heat* in the steam.

We observe that the hot well was 100° F. This gives off steam vapour corresponding (see Regnault's tables, p. 61) to an absolute pressure of ·942 lbs. on the square inch, or about equivalent to a 28-inch vacuum, supposing no air to be let free from the water. Of course if air is set free, it will reduce the vacuum still further without a corresponding rise in temperature, and thus the advisableness, as we shall see further

Digitized by Google

of freeing from air as far as possible all feed-water to a boiler, especially when working with surface condensers.

In practice the hot-well water in sea-going steamers is kept at between 110° and 120° F. In order to do this, the cubic capacity of the jet condenser should not be less than one-third that of the cylinders exhausting into it, and the weight of injection water (at a velocity of 30 feet per second) in temperate climates from 25 to 30 times that of the steam, or from 30 to 35 times in the tropics. In the Red Sea the temperature of the sea water near surface in the summer season often exceeds 85° F.

The jet condenser has now, however, been almost entirely superseded by the surface condenser, owing to its many important advantages, which will be fully detailed when we come to describe marine engines using high-pressure steam. Owing to the fact that the condensing water does not come into direct contact with the exhaust steam, the temperature of the former is not raised quite so much as with the jet condenser, in practice it is probably never raised much more than 40° F., so that a slightly larger quantity of it is required. The condensing water is forced by means of a circulating pump through a double or treble series of brass tubes about $\frac{3}{4}$ inch external diameter, and generally ·048 inch thick. Usually the water is sent first through the lower tier of tubes, and then through the upper, thereafter discharging freely through the ship's side into the sea, so that the exhaust steam impinges against the sides of the warmer or upper set of tubes.

Suppose the exhaust steam to enter the condenser at a mean absolute pressure of 3 lbs., corresponding to a temperature of 142° F. (t_1), and to be condensed into water at 120° F. (t_2); also, that the circulating water enters at 60° F. (t_3), and is discharged at 100° F. (t_4), how many pounds of circulating water will be required per pound of steam?

The Total Loss of Heat from Steam = the Total Gain by Water.

$$1 \text{ lb. } \{(1082{\cdot}4 + {\cdot}3t_1) - (t_2 - 32)\} = x \text{ lbs. } (t_4 - t_3).$$
$$1\{(1082{\cdot}4 + {\cdot}3 \times 142) - (120 - 32)\} = x(100 - 60).$$
$$1037 = 40x; \therefore x = 25{\cdot}9 \text{ lbs.}$$

So we see that with the least practicable loss in heat of the steam and the highest desirable gain of heat by the water, not less than 26 lbs. of water are required with the surface condenser, whereas with the same temperature loss in steam and rise of water temperature from 60° to 120°, the theoretical quantity of water required with the jet condenser would only have been about 17 lbs. It is usual to allow about 40 times the weight of steam for general traders and 50 times for ships always in the tropics.

Size of Surface Condensers.—The foregoing calculations are simply

Digitized by Google

interesting and instructive exercises for the student. They do not tell him the size of condensers adopted in practice. When ordinary low-pressure condensing engines were used, it was customary to specify for so many sq. ft. of condenser surface per indicated horse-power, exhausting at such and such a pressure—*e.g.*, "with a terminal pressure of 6 lbs. absolute, use 1·5 sq. ft. per I.H.P." Now, however, since the introduction of compound and multiple expansion engines, such a "rule of thumb" does not hold good, for it is evident that the weight of steam used and to be condensed, varies considerably for a given horse-power with the initial pressure. For example, two different engines indicating the *same power* and having the *same terminal pressure* may use the one steam of 60 lbs., and the other of 200 lbs. initial pressure; consequently, the weight of steam to be condensed is much less in the second case than in the first, and, therefore, a less condenser surface would suffice for it. A common rule is that of specifying a certain condenser surface per sq. ft. of boiler heating surface, and the author finds that one eminent firm adopts an average of ·7 sq. ft. per sq. ft. of boiler heating surface with natural draught. In order, however, to place this matter more thoroughly before the student a table marked "Surface Condensers" has been added to this lecture, from which it will be seen that from 22 examples the most natural rule seems to be *the ratio subsisting between the condenser surface, and the product of the capacity of low-pressure cylinder with the terminal pressure*, which gives a mean of 3·24. It is very seldom that engineers go to the trouble of measuring either the weight of circulating water or its rise in temperature.

Lecture X.—Questions.

1. What quantity of water is required to obtain one cubic foot of steam at 212° F.? What quantity of heat exists in such steam without being sensible to the thermometer? How much water at 60° F. should you allow for the condensation of each cubic foot of steam at 212° F. during the working of an engine, hot-well 100° F.? *Ans.* 1·05 cb. in.; 36·7 units of heat; 1·02 lb.

2. The temperature of the hot well is maintained at 38° C., the temp. of the condensing water being 10° C. Find the amount of water for condensation per lb. of steam at atmospheric pressure. *Ans.* 21·4 lbs.

3. State the essential differences between jet and surface condensation of steam. How is it that when a steamer enters warmer climates more water is required to condense the steam?

4. Suppose that in a jet and in a surface condenser the temperature of the exhaust steam is the same (say 150° F.), also the temperature of the hot-well water (say 120° F.), and the condensing water (say 60° F.) If the circulating water in the latter only rises 30° F., what are the relative amounts of water required per lb. of steam? *Ans.* 17·3 lbs. and 34·6, or as 1 to 2.

5. In a surface condenser the tubes are $\frac{3}{4}$ inch outside diameter, 6 feet long and ·05 inch thick. How many such tubes will be required, and what will be the total cooling surface in square feet supposing the terminal pressure of exhaust to be 6 lbs., and the I.H.P. 1000? Again, suppose the engine to require $\frac{1}{2}$ lb. of steam per I.H.P. per minute, and the conditions as to temperatures to be the same as in the last question, how many pounds or cubic feet of circulating water will have to pass through the condenser per minute? *Ans.* 1,273 tubes; 1,500 sq. ft.; 17,320 lbs.; 277 cb. ft.

6. In a marine engine fitted with a surface condenser, the steam reaches the condenser at a mean absolute pressure of 3 lbs. per square inch, and is condensed to water at 120° F. How many pounds of circulating water, which enters at 60° F. and is discharged at 100° F., will be required for every 1 lb. of steam condensed? (The temperature of steam at 3 lbs. pressure = 142° F.) (*Adv. S. and A. Exam.*, 1888.)

Digitized by Google

Twenty-Two Examples of the Relative Dimensions of Surface Condensers to Indicated Horse-Power, Heating Surface and Capacity of Low-Pressure Cylinder, &c.

	Terminal Pressure.	Indicated Horse-Power.	Revolutions.	Capacity of Low-Pressure Cylinder.	Capacity of Circulating Pump. All Double Acting.	Condensing Surface.	Condensing Surface / I. H. P.	Heating Surface.	Condensing Surface / Capacity of L.-P. Cylinder × Terminal Pressure.	Condensing Surface / Heating Surface.
	Lbs.			Cub. Ft.	Cub. Ft.	Sq. Ft.		Sq. Ft.		
1	7	750	57	78	1·487	1902	2·55	3782	3·4	·5
2	7	574	58	59·9	1·72	1562	2·7	2684	3·7	·58
3	7	280	56	26·37	·6152	811	2·9	1397	4·3	·58
4	8	421	96	24·00	·6152	1005	2·38	1825	5·2	·55
5	8½	924	48	94·57	2·3	2446	2·64	3816	3·0	·64
6	9	430	79	27·5	·7383	1042	2·4	1359	4·20	·76
7	9	436	69	29·0	·7383	792	1·8	1560	3·00	·50
8	9½	337	88	21·8	·400	605	1·8	1138	3·0	·53
9	9½	894	62	83·77	1·863	1787	2·0	3539	2·24	·50
10	9½	396	96	23·61	·400	636	1·6	1214	2·8	·52
11	10	151	97	7·47	·2338	334	2·22	543	4·5	·61
12	10½	278	106	14·2	·350	457	1·64	916	3·0	·5
13	10½	726	64	55·00	1·275	1454	2·00	1229	2·5	·80
14	10½	1140	65	94·57	2·3	2094	1·83	3777	2·1	·55
15	11	293	98	14·2	·350	457	1·56	985	2·9	·46
16	11	630	104	24·05	·6152	903	1·43	1772	3·4	·51
17	11	531	85	23·61	·400	636	1·2	1214	2·4	·52
18	11	392	101	23·61	·400	636	1·6	1138	3·2	·56
19	11	346	86	17·7	·400	636	1·84	1214	3·2	·52
20	11½	486	...	28·85	·6152	964	2·0	1620	2·9	·509
21	13	420	112	14·2	·350	457	1·09	1090	2·5	·41
22	16½	537	120	14·2	·545	910	1·7	1625	3·9	·56
Means	10	517	83	36·37	·85	1024	1·95	1793	3·24	·553

Digitized by Google

LECTURE XI.

CONTENTS.—Pressure and Volume of a Gas — Boyle's Law — Pressure, Volume, and Density—Watt's Diagram of Work, with Examples.

Pressure and Volume.—We saw in Lecture VII., by the experiment with Marcet's boiler and from Regnault's tables, that the pressure of steam increased with the temperature; we now come to consider the relation which exists between *pressure and volume.*

To understand this we here state the *first law* in regard to the expansion of gases, viz., Boyle's, and then give a class experiment to prove it.

Boyle's Law.—The pressure of a portion of a (perfect) gas *at a constant temperature* varies inversely as the space it occupies.

Or, let p = pressure.
v = volume.
Then $p\,v$ = constant.

To illustrate this law the following simple piece of apparatus may be used:—

It consists of a small metal box, B, to which are attached two glass tubes, G T, one a little more than 35″ long, and the other fully 10″. A stop-cock, S C, is screwed into the metal box, and the short tube is provided with a screw plug, S P. The whole is fixed to a board, on which there is a graduated scale of inches.

Mercury is poured into the long tube and the screw plug, S P, is taken out until the mercury rises in both tubes to the zero line. The screw plug is then replaced and encloses a column of air 10″ high in the short tube. Supposing the barometer to stand at 30″, we now continue pouring mercury into the long tube until the level of the mercury in it is 30″ above

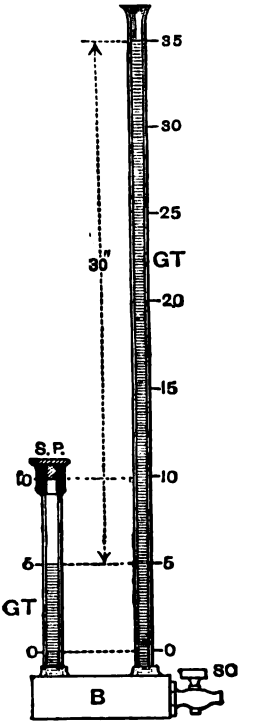

G T for Glass tubes.
B ,, Box (air tight).
S C ,, Stop-cock.
S P ,, Screw plug.

Digitized by Google

level of the mercury in the short tube. When this point, 35″, is reached, the mercury in the short tube will be found to stand at 5″. The air in the short tube has thus been subjected to an additional pressure of 30″ of mercury, *i.e.*, to an additional pressure of one atmosphere; therefore, its pressure has been doubled. Before applying this pressure it occupied 10″ of the tube; hence we see that its volume has been reduced by one-half by doubling the pressure on it, in accordance with the law just stated. It is important that the student should not overlook the fact, that this law is true, *only* when the temperature remains constant.

Since the pressure of an enclosed perfect gas kept at a constant temperature varies *inversely* as its volume, and since the density or weight per unit volume of the same, varies *inversely* as its volume, it follows that the pressure varies *directly* as the density.

This law is not perfectly fulfilled by any actual gas, but very nearly so by those gases which cannot be condensed into liquids, such as air. When a gas is about to pass by condensation into a liquid (*e.g.*, steam on the point of being transformed into water), then the density increases more rapidly than the pressure.

Watt, however, assumed that Boyle's law held good in the case of steam, and he applied it in a most ingenious manner to prove the economy of the expansive working of steam in a cylinder, and to show that he could get a greater amount of work from the steam by cutting it off early in the stroke, and thus allowing it to force the piston forward during the remainder of the stroke, merely by expansion.

Watt's Diagram of Work.—Although, as we shall see later on, steam does not expand in strict accordance with Boyle's law (for the temperature of the steam falls the more it is expanded, unless external heat is applied to it, to make up for the loss due to the work got out of it), yet we shall gain a great insight into the action of steam in an engine cylinder, by first discussing "Watt's Diagram of Work done during Expansion," and then applying the corrections that have since been found necessary, in order to truthfully represent the actual state of matters.

The following figure will illustrate to the student the method adopted by Watt. The horizontal line, or abscissa, A B, indicates the length of the stroke, and is divided into 10 equal parts; the vertical line, or ordinate, A C, represents the pressure of steam used by Watt, say one atmosphere, and is also divided into 10, or decimal parts of an atmosphere of pressure. When the piston has travelled the distance, C D, *i.e.*, $\frac{2}{10}$ or $\frac{1}{5}$ of the stroke, the steam is cut off, and the remainder of the stroke is effected by

Digitized by Google

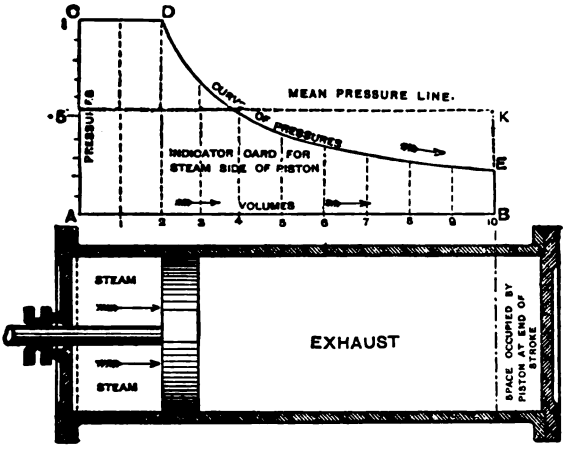

WATT'S DIAGRAM OF WORK.

the expansive action of the steam. The gradually falling curve, D E, marked "curve of pressures," is found by drawing verticals from each of the divisions of the stroke, 3, 4, ... 10, and marking them off in height corresponding to the pressures, p, at these points by the following formula, and joining their upper ends by a curved line:—

$$p\,v = \text{a constant, or } p = \frac{\text{constant}}{v}.$$

Where v = the volume swept out by the piston at the several points, and is, therefore, represented by the different distances, 2, 3, ... 10, from the commencement of the stroke.

For example—

At point of cut off
$p = 1$
$v = 2$
$\therefore$ Constant $= p\,v$
" $= 1 \times 2$
" $= 2$

				Atmosphere.
At point 1, p	. . . . .			1
" 2, p	. . . . .			1
" 3, p	$= \frac{\text{constant}}{v}$	$= \frac{2}{3}$	$=$	0·66
" 4, p	$=$ "	$= \frac{2}{4}$	$=$	0·5
" 5, p	$=$ "	$= \frac{2}{5}$	$=$	0·4
" 6, p	$=$ "	$= \frac{2}{6}$	$=$	0·33
" 7, p	$=$ "	$= \frac{2}{7}$	$=$	0·29
" 8, p	$=$ "	$= \frac{2}{8}$	$=$	0·25
" 9, p	$=$ "	$= \frac{2}{9}$	$=$	0·22
End of stroke, " 10, p	$=$ "	$= \frac{2}{10}$	$=$	0·2
Dividing by the Number of Parts, viz.,			10	4·85
We get roughly a Mean Pressure			$=$	·485*

* This mean pressure is less than the true mean as explained at pp. 82 and 137.

Digitized by Google

By adding the several pressures, and dividing them by the number of divisions taken—viz., 10—we get the average pressure throughout the stroke, = ·485 of an atmosphere, or nearly half an atmosphere. The economy of cutting off the steam before the end of the stroke will, therefore, be at once apparent, for we have obtained an average pressure equal to nearly half that which would have been obtained by carrying full steam pressure throughout the whole stroke, and have only used $\frac{1}{2}$ of the quantity of steam.

Since work done is measured by force or pressure, multiplied by the distance through which the force or pressure acts, the area of the rectangle, A D (see upper part of Fig., p. 81), being equal to the pressure, A C, if reckoned in lbs., multiplied by the distance, A 2, or, C D in feet, measures to scale the work done upon the piston by the steam up to the point of cut-off in foot-pounds or units of work. In the same way, the area of the rest of the figure—viz., D E B 2, measures to scale the work done upon the piston by the steam while expanding in the cylinder, also in foot-pounds; for this area is equal to the mean pressure in lbs. between the points, D and E, multiplied by the distance, 2 B, in feet. Consequently, the area of the *whole* figure, A C D E B, measures to scale the *whole* work done by the steam in one stroke in foot-pounds. This area is equal to the calculated mean pressure throughout the stroke, multiplied by the whole stroke, A B, and expresses the result of Watt's diagram of work. Watt, in calculating the mean pressure throughout the stroke, assumed that the pressure at each of the points into which he divided the stroke commencing with number 1, remained constant until it arrived at the next in order, by which method he obtained a less value than the true mean, because he omitted to take into account the ordinate of pressure at the point, A, or the very commencement of the stroke. If we now take into account the first ordinate at A, as well as the last one at 10, we have the following eleven pressures:—1, 1, 1, ·6̇, ·5, ·4, ·3̇, ·29, ·25, ·2̇, and ·2, giving a total sum of 5·86, which sum being divided by the number of ordinates, viz., 11, gives us a mean of ·532 of an atmosphere instead of ·485, or nearly 8 lbs. pressure on the square inch, which is a nearer approximation to the true mean.

Let us take another example of Watt's diagram of work, taking the first as well as the last pressure ordinate into account, in order to get a nearer approximation to the true mean. Suppose we have an engine using steam of 100 lbs. pressure per square inch, and cutting off at $\frac{1}{4}$ of the stroke, to find the curve of expansion by Boyle's Law and the mean pressure.

Digitized by Google

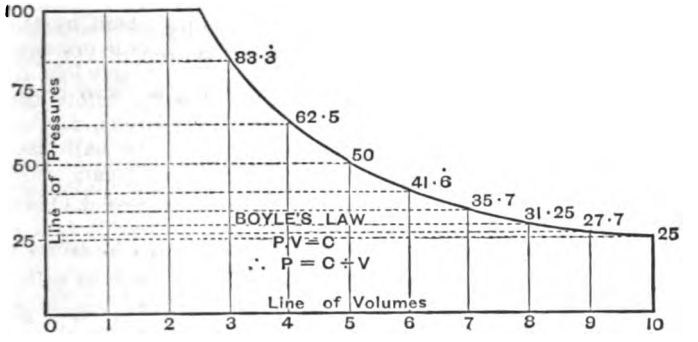

As before—

Constant = $p\,v$

" = $100 \times \frac{1}{4}$

" = 25

At 0, p	. . . . .			100	lbs.
At point 1, p	. . . . .			100	"
" 2, p	. . . . .			100	"
" 3, p =	$\frac{\text{constant}}{v}$	= $\frac{25}{\dot{3}}$	=	$83\dot{3}$	"
" 4, p =	"	= $\frac{25}{4}$	=	62·5	"
" 5, p =	"	= $\frac{25}{5}$	=	50	"
" 6, p =	"	= $\frac{25}{\dot{6}}$	=	$41\dot{6}$	"
" 7, p =	"	= $\frac{25}{\dot{7}}$	=	$35\dot{7}$	"
" 8, p =	"	= $\frac{25}{8}$	=	31·25	"
" 9, p =	"	= $\frac{25}{\dot{9}}$	=	$27\dot{7}$	"
" 10, p =	"	= $\frac{25}{1}$	=	25	"

Dividing by the Number of Points, viz., 11 | 657·2

We get an approximate Mean Pressure = 59·7 lbs.

There are several rules for obtaining approximately the mean pressure from a diagram of work such as we have been discussing. The plan most commonly adopted by engineers (as we shall see at pp. 127 and 137) in finding the mean pressure from actual indicator diagrams is, to measure by a suitable scale or rule the length of each of the ten ordinates, taken at the centre of each of the ten spaces into which the diagram is divided, add them together, and divide by their number. For instance, applying this rule to the last example, we should measure the length of the vertical lines midway between the points 0 and 1, 1 and 2, 2 and 3, ... 9 and 10, add these ten pressure ordinates

Digitized by Google

together, and divide the sum by 10, to get the mean pressure; and doing so (or calculating these pressures by pv = constant), we find them to be respectively, 100, 100, 100, 71·43, 55·5̇, 45·4̇5̇, 38·46, 33·3̇, 29·41, and 26·31 lbs., giving a mean of 59·9 lbs., or slightly greater than that found above.

Simpson's Rule is as follows:—Divide the length of the figure into n equal parts, n being an even number, and draw ordinates through the points of division to touch the boundary lines. Add together the first and the last ordinates, call the sum A; add together the even ordinates 2, 4, 6, &c., call the sum B; add together the odd ordinates 3, 5, 7, &c., except the first and the last, and call the sum C; then $\frac{A+4B+2C}{3n}$ = mean ordinate or pressure. This quantity multiplied by the length, L, of the figure gives the area of the figure, or what we would call the area of work in this case.

Another common and simpler rule which is sufficiently exact for most purposes is this—Divide the figure into an even or an odd number of equal parts, add together the first and the last ordinates, call the sum A; add together all the intermediate ordinates and call the sum B. Let, n, be the number of divisions. Then $\frac{A+2B}{2n}$ = mean ordinate or pressure. This quantity multiplied by the length, L, of the figure gives the area. The student should apply these rules to the examples at pp. 81 and 83, and compare the results with what we got.

Digitized by Google

LECTURE XI.—QUESTIONS.

1. State Boyle's law, and describe an experiment to show that the pressure of a gas varies inversely as the space it occupies.

2. Steam is admitted into a cylinder at atmospheric pressure, and is cut off at half stroke. Divide the stroke into 10 equal parts, and, supposing that the pressure at the beginning of each of these portions remains uniform until the piston reaches the next in order, find the pressure at each point as well as the mean pressure.

3. The cylinder of an engine is 25 inches long, and steam is admitted at 18 lbs. total pressure, the final pressure being 4 lbs. At what point of the stroke was the steam cut off? *Ans.* 5·5 inches.

4. Steam is admitted into a cylinder at a pressure of 25 lbs. on the square inch above the atmospheric pressure of 15 lbs. on the square inch, and is cut off at such a point that its pressure at the end of the stroke is 5 lbs. below that of the atmosphere. At what point of stroke was it cut off? Make a diagram, showing approximately the steam pressure on the piston throughout the stroke. *Ans.* ·25 of the stroke.

5. The cylinder of an engine is 25 inches long; steam is admitted at 18 lbs. actual pressure, and the final pressure is 4 lbs. Divide the stroke into 10 equal parts; find the steam pressure at each point of division, and set out Watt's diagram of work done. Find also the mean pressure of the steam by Watt's, by Simpson's, and by the usual rule. *Ans.* mean = 10 lbs.

6. The stroke of a piston is 4 feet 6 inches, the steam is cut off at 9 inches, and the pressure at the end of the stroke is 5 lbs. below that of the atmosphere. At what pressure above the atmosphere was steam let in? 45 lbs.

7. Steam is admitted into the cylinder of an engine at a pressure of 45 lbs. per square inch by gauge, and is cut off at one-third of the stroke. Find the pressure in pounds at half-stroke, and also at the end of the stroke. Show roughly, by a diagram, that additional work is obtained from a given quantity of steam—(1) by cutting off the supply from the boiler before the end of the stroke; (2) by condensing the steam instead of allowing it to escape into the air. *Ans.* 25 lbs.; 5 lbs. above atmosphere.

8. Explain the advantage of working steam expansively and with condensation. Steam is admitted into a cylinder at 30 lbs. above the atmosphere, which is taken at 15 lbs. per square inch, and is cut off at a certain point, and then expands to a pressure of 5 lbs. below the atmosphere. If the length of stroke be 4½ feet, at what point is the steam cut off? *Ans.* 1 foot.

9. The temperature of a condenser is 100° F., and the corresponding pressure from Regnault's tables is ·942 lbs. The vacuum shows 26 inches by gauge, and the barometer stands at 29·9 inches; what part of the pressure in the condenser is due to air in the condenser? *Ans.* = ·975 lbs.

10. The mean steam pressure on a piston being 26 lbs. to the square inch above atmospheric pressure, and the mean vacuum pressure 13·5 lbs. to the square inch, what is the total force exerted on a piston 63 inches in diameter? What would have been the force if the engine had exhausted at atmospheric pressure? *Ans.* 123,131 lbs.; 81,048 lbs.

Digitized by Google

LECTURE XII.

CONTENTS.—Charles' Law of the Expansion of Gases—Absolute Zero of Temperature—Expansion of a Gas doing External Work—Adiabatic Expansion—Heat Engines—Carnot's Principle.

Second Law of the Expansion of Gases.—This law, which was discovered by Charles, and is known as Charles' law, was first published by Dalton in 1801, and independently by Gay Lussac in 1802. It may be stated as follows:—

A gas, under constant pressure, expands by a definite fraction of its volume at 32° Fah., for a given increase of temperature. The amount of this increase of volume has been the subject of careful investigation by many experimenters, and the value assigned by Regnault is that the expansion of a gas between 32° Fah. and 212° Fah. is ·3665 of its volume at 32° Fah. We must also note the remarkable fact that the amount of expansion is the same for all gases. The laws of the expansion of gases are only approximately true for actual gases, but form the essential characteristics of a *perfect gas*. The variation from this second law is very slight in permanent gases (*i.e.*, gases which cannot be liquefied by cold or pressure), but is more considerable in liquefiable gases. Every gas, however, more nearly fulfils this law the more highly it is heated and rarefied. Air, when perfectly dry, deviates but slightly in its behaviour from that of a perfect gas, but when containing moisture, as it almost always does in practice, the deviation is considerable.

Absolute Temperature.—We have seen that a volume of gas falling in temperature from 212° Fah. to 32° Fah., contracts in the ratio of 1·3665 to 1. A curious question now arises, viz., At what temperature will the volume of the gas diminish to nothing? The gas in falling the 180° between boiling and freezing points on the Fahrenheit scale, decreases in volume ·3665 of its volume at freezing point, with what fall in temperature from 32° would it decrease to nothing?

Stating by proportion we have—

$$\cdot3665 : 1 :: 180 : x$$

$$\therefore x = \frac{180}{\cdot3665} = 491°\cdot13 \text{ Fahrenheit.}$$

Or, let x = temperature from freezing point;

Then—

$$\frac{x}{x + 180} = \frac{1}{1\cdot3665}$$

$$\therefore 1\cdot3665\, x = x + 180$$

$$\cdot3665\, x = 180$$

$$\therefore x = \frac{180}{\cdot3665} = 491°\cdot13 \text{ F.}$$

Digitized by Google

That is, when the temperature has fallen 491°·13 Fah. *below* freezing point, or 459°·13 below the zero of Fahrenheit's scale, the gas will occupy no space at all, and all the heat will have been extracted from it. This number, – 459°·13, or practically – 460° Fah., is termed the *absolute zero of temperature*, and corresponds approximately to, – 273° Cent.

The annexed diagram* will make this clear.

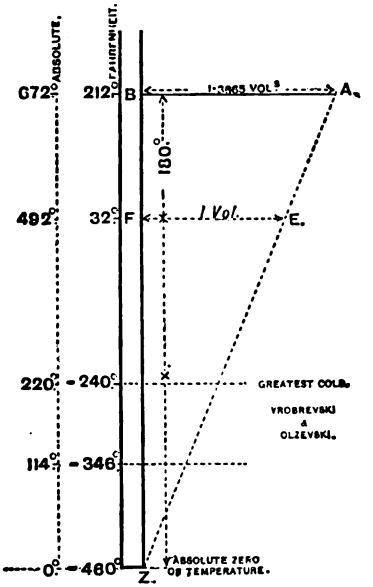

B Z is a line of temperatures, F, being the freezing point and, B, the boiling point. We know that the ratio of the volume of the gas at F to the volume at B is $\frac{1}{1{\cdot}3665}$; therefore, if we draw at right angles to, B Z, two lines, B A, and, F E, to represent the relative volumes of the gas at these points, then join A E, and produce it beyond E, we find that it cuts the line of temperatures, B Z, at a point, Z, 492° below freezing point, showing that at that point the volume of the gas has been reduced to nothing.

* From *The Howard Lectures*—"On the Conversion of Heat into Useful Work," by William Anderson, M. Inst. C.E.

Digitized by Google

This absolute zero of temperature has been fixed solely by reasoning, and no temperature so low having ever been obtained, we can assert nothing as to the state of a gas when deprived of all its heat. In questions on thermodynamics and the expansion of gases, it is most convenient to measure temperatures, not from the arbitrary zero of the Fahrenheit scale, but from the absolute zero just found, so that, if t = temperature from Fahrenheit zero, τ = absolute temperature Fah. Then $\tau = t + 460$.

We now have a means of estimating the amount of expansion of a gas due to a given rise of temperature, the expansion being proportional to the absolute temperature. All gases expand $\frac{1}{492}$ of their volume at 32° Fah. for every increase of temperature of 1° Fah.* We may, therefore, express the laws of Boyle and Charles by the formula—*The product of the pressure and volume of any gas is proportional to the absolute temperature, i.e.*—

$$pv = c\tau \text{ or } \frac{pv}{\tau} = c$$

Where c = a constant depending on the gas.

Expansion of a Gas doing External Work.—Hitherto we have been dealing with the expansion of a gas in accordance with Boyle's law, and we have drawn the curve of expansion in Watt's diagram of work. The necessary condition for the fulfilment of Boyle's law is, that the temperature remains constant, and the curve representing expansion under this condition is an hyperbola, and is known in connection with this subject as an "*isothermal curve*," *or curve of equal temperature.* Suppose we have an ideal engine, the cylinder of which is constructed of non-conducting material, so that no heat can enter or leave the working gas during its action, and that we introduce a mass of air at a certain pressure, volume, and temperature, and allow it to do work on the piston by its expansive power; although no heat can pass through the cylinder, yet we find that the temperature of the working gas falls considerably throughout the expansion. The explanation is easy. The gas in expanding converts a quantity of its heat into actual mechanical work, and the amount of work done by our ideal engine *must* be the exact mechanical equivalent of the heat lost by the gas in the cylinder. Therefore, when a gas expands doing external work, its temperature must fall (otherwise no work could be done), and the relation between pressure and volume will not be in accordance with Boyle's law, unless heat is supplied to the substance during expansion, in proportion to

* *i.e.*, The coefficient of expansion per degree for a constant pressure is, = the reciprocal of the absolute temperature of melting ice = $\frac{1}{461}$ on Fah. scale, or $\frac{1}{273}$ on Cent. scale.

Digitized by Google

the amount of work done by the gas. This is a most important point, and is one of the claims for a steam jacket, such as that used by Watt when working steam expansively; we shall, however, have occasion to refer to this application of the principle later on. If a gas expands without doing any external work its temperature is unaltered.

Adiabatic Expansion.—*Expansion doing work without gain or loss of heat from an external source (as already referred to) is termed "adiabatic" expansion*, and the curve which represents the changes of pressure and volume throughout is termed an "adiabatic" curve, to distinguish it from the isothermal curve of expansion according to Boyle's law.

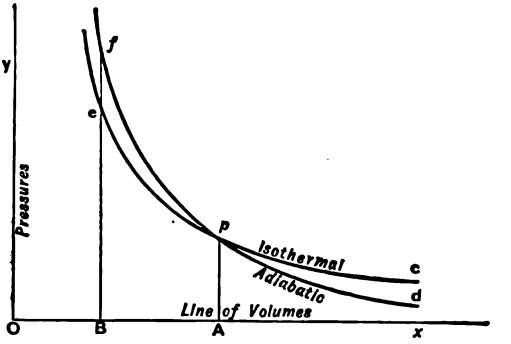

ISOTHERMAL AND ADIABATIC CURVES.

Suppose we have a volume, O A, of a gas at a pressure, A *p*, and expand it at a uniform temperature, and let the changes of pressure and volume be represented by the isothermal curve, *p c*. Then, if the gas be expanded adiabatically, the changes of pressure and volume will be represented by the adiabatic curve, *p d*, and it is evident that this curve must fall below the isothermal since the gas has done work. If, however, we compress the gas from the volume O A to the volume O B, we are now doing work upon it, and the equivalent of the work done upon the gas is imparted to it in the form of an additional quantity of heat. If the compression takes place at uniform temperature this additional heat must escape, and the changes of pressure and volume will be represented by the isothermal curve, *p e*. If, however, the compression takes place under the condition that no heat can escape, then the changes of pressure and volume will be represented by the adiabatic curve, *p f*, and this curve rises above the isothermal. For, the effect is

Digitized by Google

same as if the gas had first been compressed at constant temperature and then a certain quantity of heat had been taken up by it while its volume was kept constant. Thus, we see that the adiabatic curves are more inclined to the line of volumes than the isothermals, and, therefore, to diminish the volume of a gas by a given amount, requires a greater increase of pressure when the gas is prevented from losing heat, than when it is kept at a constant temperature. We infer from this, that even in a conducting cylinder, if the compression takes place very suddenly, before the heat has time to escape, a greater pressure will be required to compress it than if the action were gradual. For a complete study of this part of the subject we would refer the student to the larger treatises.*

Heat Engines.—We propose now to discuss an ideal or imaginary engine, for the conversion of heat into mechanical work, and shall calculate the work done by the engine.

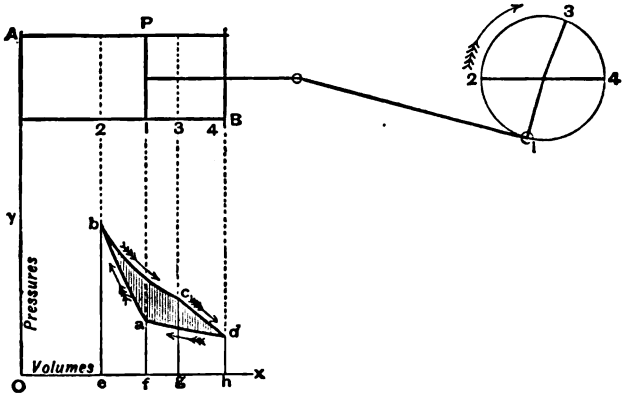

IMAGINARY HEAT ENGINE.

Let A B be the working cylinder of the heat engine, having a volume of a perfect gas, say air between the cover, A, and the piston, P. The cylinder must be constructed of non-conducting material, so as to allow of adiabatic expansion, but yet it must be capable of transmitting heat to and from the working substance at certain intervals of the stroke. We see, therefore, that these special conditions of working are contradictory, but, as the engine is purely imaginary, we shall suppose that this difficulty has been overcome.

* Such as Rankine on *The Steam Engine*, Cotterill on *The Steam Engine considered as a Heat Engine*, Maxwell on *Heat*.

Digitized by Google

Starting then with the piston in position, 1, we have a volume of gas, Of (see diagram below cylinder), at a pressure, fa, and absolute temperature, τ_1. As the crank moves from position 1 to position 2 (upper diagram), the air is compressed, and, since no heat can escape, the relation between pressure and volume is represented by the adiabatic curve, $a\,b$ (lower fig.) When the piston has reached point 2, the absolute temperature of the working substance has risen to τ_2. During the movement of the piston from point 1, to point 2, work has been spent upon the working substance, and this we may call *negative* work. The working substance now forces the crank further round and begins to expand. The effect of this would be to make the temperature fall, but throughout the expansion from 2 to 3, heat is supplied to the working substance in sufficient quantity to maintain the temperature uniform, and the relation between volume and pressure is represented by the isothermal curve, $b\,c$. During this process the substance is doing work, and this we reckon as *positive*. In order to maintain this isothermal curve a quantity of heat, H, has been taken up by the working substance. When the piston arrives at point 3,* the supply of heat to the working substance is stopped, and the expansion continues without gain of heat, therefore the temperature falls. The relation between the pressure and volume at this part of the stroke, is represented by the adiabatic curve, $c\,d$. When the temperature has fallen to τ_1 (the temperature from which we started) the piston will have arrived at the end of its stroke, and the work having been done *by* the substance will be reckoned *positive*. The crank is now in position 4, and on passing that point causes the piston to move back and to compress the air in the cylinder. This compression would cause a rise of temperature, but the additional heat imparted to the substance is abstracted during the compression, and the relation between pressure and volume is exhibited by the isothermal curve, $d\,a$. Since, before beginning the return stroke the working substance had the same temperature as that from which we started, therefore, when the piston arrives at point 1, the working substance has returned exactly to its original state as regards volume, pressure, and temperature. During this latter portion of the stroke work has been spent upon the substance, and must, therefore, be considered *negative*, and simultaneously a quantity of heat (say h) has been abstracted from the working substance.

Such a series of operations as this, by which the

* Point 3 must be so chosen that adiabatic expansion from cause the temperature to fall to $\tau_1°$.

Digitized by Google

substance, after undergoing successive states of pressure, volume, and temperature, is finally brought back in all respects to its original state, is termed a *cycle* of operations. When the changes of state can be passed through in *either* direction, the cycle is said to be *reversible*. In the diagram of the expansion of the gas, the figure, *a b c d*, represents the cycle, for, while we started with a pressure, *af*, volume, O*f*, and temperature, τ_1, we arrived at the close of our operations with the same pressure, volume, and temperature. The working substance is performing work on the piston while it moves from point 2, to point 4, the expansion curve being *b c d*, and the work done is represented by the area of the figure, *b c d h e*. This is positive work. Work is done upon the substance while the piston moves from point 4, to point 2, the expansion curve being *d a b*, and the work done is represented by the area of the figure, *d a b e h*. This is negative work. To find the work performed by the substance, we subtract the area, *d a b e h*, representing negative work, from the area, *b c d h e*, representing positive work, and the remainder, *a b c d*, represents the useful work performed by the substance throughout the cycle of operations.

Work done by a Heat Engine.—Our operations on this heat engine consisted in taking in a quantity of heat, H (from positions 2 to 3 of stroke), at a temperature, τ_2, and rejecting a less quantity of heat, *h* (from 4 to 1), at a lower temperature, τ_1. Since we are dealing with the same quantity of gas throughout, the quantities of heat in the gas, before and after expansion, are proportional to their absolute temperatures, τ_2 and τ_1.

$$i.e., \quad \frac{H}{\tau_2} = \frac{h}{\tau_1} \quad \text{or} \quad \frac{H}{h} = \frac{\tau_2}{\tau_1},$$

Now, let J = Joule's equivalent (see p. 54).

The heat utilised by the engine = H − *h*

$\therefore$ The work done by the engine = $J(H - h) = J\,H\left(1 - \frac{h}{H}\right)$

$$= J\,H\left(1 - \frac{\tau_1}{\tau_2}\right) = J\,H\left(\frac{\tau_2 - \tau_1}{\tau_2}\right).$$

For example, suppose that the air in our ideal engine is raised to a temperature of 400°, and, after doing work, its temperature is 32° Fah.;

Then, $\tau_2 = 400 + 460 = 860$

,, $\tau_1 = 32 + 460 = 492$

Work done = $J\,H\left(\frac{\tau_2 - \tau_1}{\tau_2}\right) = J\,H\left(\frac{860 - 492}{860}\right) = .43\,J\,H$, nearly.

Digitized by Google

Carnot's Principle.—The following important principle was laid down by Sadi Carnot, the founder of the theory just given, in 1824:—

The amount of work done by a reversible heat engine depends *only* on the constant temperature at which heat is received, and at which it is rejected, and is independent of the nature of the intermediary agent (such as steam, air, &c.) Its efficiency is consequently a maximum.

We see, therefore, that the amount of work got out of a heat engine, depends entirely on the absolute temperatures between which it is worked. In order to obtain the whole of the work from a mass of heated air, it would be necessary to cool it down to the absolute zero—a process beyond the reach of practice; and, hence, our imaginary engine, which is absolutely perfect in its action, is only able to yield a *portion* of the energy stored in the gas in the form of heat. The example worked out shows this clearly, for our perfect engine, in working between the temperatures 400° and 32°, can only convert ·43 of the heat energy into actual mechanical work. The efficiency of any heat engine used in actual practice, such as a steam or an air or a gas engine, is considerably less than this.

LECTURE XII.—QUESTIONS.

1. Having regard to the theory of heat, will you state some reasons for concluding that when steam expands in a cylinder behind a working piston, the law of expansion differs from that of Boyle?
2. Define a heat engine. State the conditions under which such an engine will give out the greatest quantity of work, and establish your statement by reasoning.
3. A perfect heat engine receives heat at a temperature of 350° F., and rejects heat at a temperature of 90° F. Find its efficiency. *Ans.* = ·32.
4. A perfect heat engine works between the temperatures 300° F. and 100° F.; prove the formula which gives the work done by consuming a given quantity of heat.
5. If steam were admitted into a cylinder at a pressure of 15 lbs., and a temperature 212° F., and were expanded to a temperature of 100° F., what is the greatest amount of work which could be done according to theory? *Ans.* = ·16 J H.
6. Find an expression for the efficiency of an elementary heat engine.
7. Investigate a method of ascertaining the absolute temperature which corresponds to 100° F.
8. What is meant by the adiabatic expansion of a gas? If y[illegible] required to set out approximately the curve of adiabatic exp[illegible] steam, how would you proceed?

See Appendix at the end for more and later Advanced and Honours Q[illegible]

Digitized by Google

LECTURE XIII.

CONTENTS.—Distribution of Steam in a Cylinder—Lap and Lead of a Valve, &c., Angle of advance of an Eccentric, Points of admission, Cut-off, Release, and Compression—Diagram of the relative positions of Crank and Piston—Zeuner's Valve Diagrams.

Distribution of Steam in a Cylinder.—Before explaining the Indicator, and the results obtained by it in the form of Indicator Diagrams from various types of engines, it will be necessary to describe generally the action of the eccentric, slide valve, crank, connecting rod, and piston, with their relative positions, so as to understand the distribution of steam in the cylinder of an ordinary engine.

This is most graphically and easily done by aid of a large skeleton working model, in which the slide valve, piston, &c., are all shown in section in one plane.

By aid of this model (fitted with a set of slide valves having different dimensions, the means of fixing the eccentric at different angles to the crank, and of altering the link motion or the travel of the slide valve), the distribution of steam in a cylinder may be studied simultaneously by a large class.

The engine, as seen by the arrow on the crank pin circle, is going ahead or turning with the hands of a watch. The valve is moving forward and on the point of cutting off steam from the cylinder at about half-stroke, while the piston is moving back towards the after end of the cylinder, and will therefore complete the rest of the stroke under the expansion of the steam.

It will be seen from the figure that the eccentric, E, consists of a simple pulley placed eccentrically $2\frac{1}{4}$ inches to the crank shaft centre, *i.e.*, with a throw of $2\frac{1}{2}$ in. The to and fro movement of the slide valve is obtained from this eccentric through the intermediate mechanism of the eccentric strap, eccentric rod, E R, and the valve spindle, V S, while the to and fro movement of the piston, P, is obtained from the crank keyed to the crank shaft, through the intermediate mechanism of the connecting rod, C R, and the piston rod, P R. It is, therefore, clear that, in order to ascertain the effect of the slide valve in distributing steam to the cylinder, its position at any point of the piston's stroke must be studied by observing the relative positions of the eccentric and the crank.

Digitized by Google

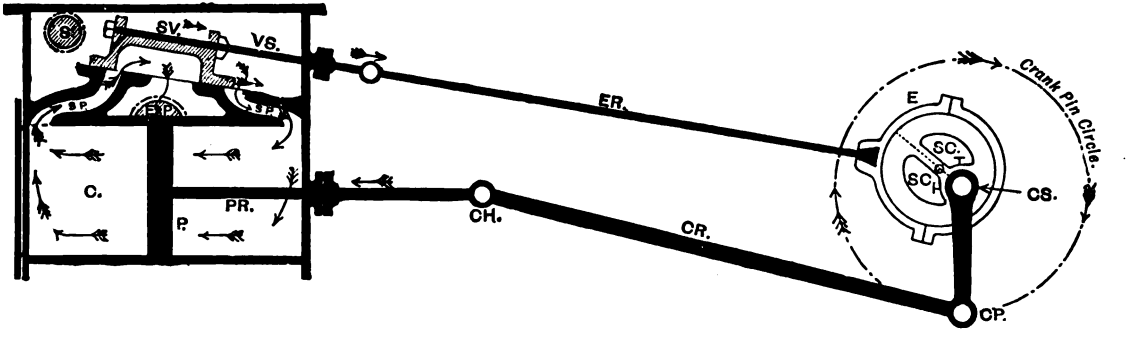

C for Cylinder.	C P for Crank pin.	S V for Slide valve.	S C for Set screw for adjusting eccentric to any angle with respect to the crank.
P ,, Piston.	C S ,, Crank shaft.	V S ,, Valve spindle.	
P R ,, Piston rod.	S ,, Steam pipe.	E R ,, Eccentric rod.	
C H ,, Cross head.	S P ,, Steam ports.	E ,, Eccentric pulley.	
C R ,, Connecting rod.	E P ,, Exhaust ,,		

The above diagram represents a working model belonging to the College of Science and Arts, Glasgow, about 10 feet long, with a cylinder 18 inches diameter and 24 inches stroke, presented by the President, David Rowan, Esq., M. Inst. C.E., and fitted in the college workshop by one of the students, Mr. James Welsh, with a separate set of link motion, double eccentrics, &c., which can be put on in a few minutes.

Digitized by Google

Lap and Lead of a Valve, &c.—The slide valve shown in the following figure is purposely placed at the centre of its stroke, in order to facilitate an explanation of what is meant by *lap*. The valve consists of a hollow box with projecting ends, the lower face being accurately planed and fitted, so as to be steam tight on the valve port face. The hollow arch of the valve just covers the distance between the inner edges of the steam ports, so that the moment the valve cuts off the exhaust from one end of the cylinder it opens the other end of the cylinder to exhaust. Sometimes, however, slide valves have what is termed *inside lap*, that is, an inner projection at each end of the arch of the valve, marked in dotted lines by, x, in the figure. This causes the exhaust to take place later on the one side and to be cut off sooner on the other side of the piston. The effect of this is twofold—(1) a later release causing a higher back pressure, (2) compression before the end of the stroke. The latter result is useful, as we shall see in the next lecture, owing to arresting the momentum of the moving piston, piston-rod, crosshead and connecting-rod, and thus lessening what would otherwise be a sudden stress or jerk on the cross-head and crank-pin bearings, causing undue wear and tear. This is termed compression or cushioning; frequently however, part of the cushioning is effected by giving "*lead*" to the slide valve, that is, allowing it to open the steam port before the piston has come to the end of its stroke.

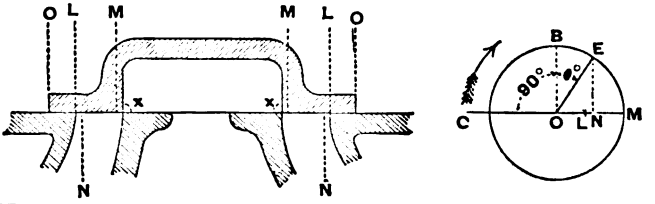

Now, looking at the left-hand figure we see the three dotted vertical lines drawn above the valve face at each end of the valve. The distance, O to L, is the amount by which the valve overlaps the steam port at each end. This is termed the *outside lap* of the valve, while the distance between L and M is the amount the valve (when at the end of its stroke) opens the steam port for admission of steam into the cylinder. This distance, L M, is frequently less than the breadth of the steam port, because the same passage serves both for inlet of the steam to, and its exit from, the cylinder; and, seeing that the steam has expanded in bulk while doing work in the cylinder, freer and the quicker the exhaust, t[illegible] will be the ba[illegible] obstructive pressure.

Digitized by Google

The vertical dotted lines drawn from, N, below the valve face near the outside edge of each steam port, indicate the *lead.*

The circle in the right-hand figure is taken to represent the path of the centre of the eccentric pulley, which works the slide valve. The radius, O M, is, therefore, equal to the throw of the eccentric, or half the travel of the valve. Now, supposing the crank to be in the position, O C, or level at the inner dead centre in a horizontal engine (*i.e.*, the piston is just at the commencement of the outgoing stroke), mark off the distance, O N, equal to the outside lap, O L, plus the lead, L N, draw N E perpendicular to O M, and join O E; then (neglecting the obliquity of eccentric rod) we have—

O C for the Centre line of the crank.	L M for the Maximum opening to steam.
O E ,, ,, ,, eccentric.	$\theta°$ for the Angle, B O E, or the angle of advance.
O L ,, Lap.	
O N ,, Lap + lead.	

We thus see that the centre line of the eccentric must be in advance of the centre line of the crank, by $(90° + \theta°)$, where $\theta°$ is called the *angle of advance.*

If there was neither lap nor lead, then the centre line of the eccentric would be at right angles to the centre line of the crank, or the eccentric only 90° ahead of the crank.

In order to impress these various parts and positions of the slide valve, we again enumerate them as definitions.

Lap or cover of a slide valve is the amount by which the edge of the valve overlaps the adjoining edge of the steam port, when the valve is in the middle of its stroke, and is termed *outside* or *inside* lap, according as we refer to the outside or inside of valve.

Lead is the amount of the opening of the steam port at the beginning of the piston's stroke.

Angle of advance of eccentric is the angle by which the centre line of the eccentric stands in advance of that position, which would bring the valve to its mid-stroke when the crank is on the dead point; or, in other words, the angle between the crank and the centre line of the eccentric *minus* 90°.

* *The throw of an eccentric* is the distance between the centre of crank shaft and the centre of eccentric pulley.

The travel of a slide valve is equal to the distance the valve moves to and fro in one stroke of the piston, or twice (the lap + opening to steam). It is equal to *twice the throw* of eccentric.

* Several authors—*e.g.*, Prof. Goodeve—state that *the throw of an ecc* is equal to the diameter of the circle described by the centre of the ec pulley. The word throw is ambiguous, and might be discarded, liable to lead to confusion. See *The Practical Engineer*, Nov. 18, 1887.

Digitized by Google

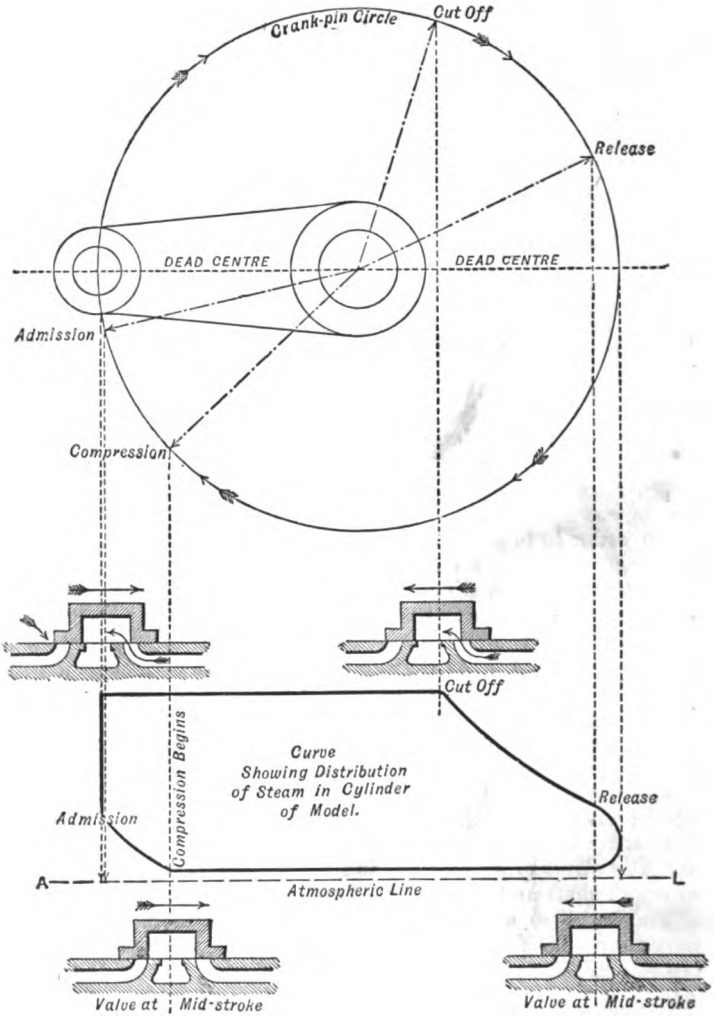

Relative Positions of Crank and Slide-Valve, with Curve showing the Distribution of Steam in the Cylinder.

Digitized by Google

The foregoing diagram illustrates the four principal points in the motion of the simple D slide valve of the working model explained at the beginning of this lecture, p. 95, as well as the corresponding positions of the crank, and also the probable distribution of steam in the cylinder or "diagram of work."

1. The point of *admission* of steam to the cylinder.
2. The point of *cut-off* of steam from the cylinder.
3. The point of *release*, or when exhaust begins.
4. The point of *compression*, or when exhaust stops.

The diagram is self-explanatory, in as far as it shows how each of these points marked on the crank pin circle are projected on to the "diagram of work" (or piston's stroke) below, with the corresponding positions of the slide valve sketched on the lines of projections. The direction of motion of the crank and of the slide valve at each point is also made clear by arrows. It will be observed that the slide valve is at the same position with respect to the steam ports when beginning to admit steam to the cylinder and to cut off the supply of steam from the same, and that its direction of motion is in each case opposite to the direction of the piston's motion. It is also evident that the slide valve is at the middle of its stroke when release and when compression begins, and that its motion is opposite in each case to that of the piston's motion, as indicated by the straight arrows placed directly above the slide valve.

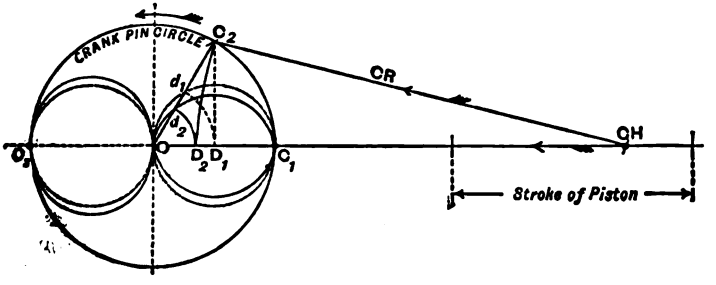

Relative Positions of the Crank and the Piston.—The following method of determining relative positions of the crank and the piston is of great importance, because it is the method used in determining the relative positions of the slide valve and its eccentric.

In the fig., let O C_2 represent the crank, then with centre, C_2, and radius (C R) = the connecting-rod, describe an arc cutting the centre line of the engine's stroke in (C H), which gives the position of the crosshead. With this point (C H) as a centre, and the

Digitized by Google

length of (C R) as radius, describe the arc, $C_2 D_2$. The length O D_2 will be equal to the distance of the piston from the *middle* of its stroke when the crank is in the position O C_2. If this distance, O D_2, be set off along the crank, O C_2, by drawing with centre, O, and radius, O D_2, the arc, $D_2 d_2$, and the same operation be repeated for a series of different positions of the crank, all these points will be found to lie on the polar curve, O d_2 C_1. Any chord of this curve drawn from the point O will be equal to the distance of the piston from the middle of its stroke when the crank lies along that chord.

The double looped curves in full lines are the curves obtained by this method.

If the connecting-rod be infinitely long it is evident that instead of the arc, $C_2 D_2$, we get the straight line, $C_2 D_1$, at right angles to the line of stroke, and that O D_1 is, in this case, the distance of the piston from the middle of its stroke. If this distance be set off along the crank by drawing the arc, $D_1 d_1$, and the same operation be repeated for a series of different positions of the crank, it will be found that all these points lie on a pair of circles drawn with O C_1 and O C_3 as diameters. These are shown by the dotted circles in the figure.

The effect of the obliquity of the connecting-rod is well seen by comparing the curves in full lines with the circles in dotted lines.

In valve diagrams it is usual to neglect the effect of the obliquity of the eccentric-rod, because the ratio of its length to the throw of the eccentric is generally great, and its effect is therefore generally not worth taking into account.

Another method of finding the relative position of the crank and the piston is as follows :—(see next fig.)

Draw two lines, $P_1 P_3$, $P_2 P_4$, at right angles to each other. From their intersection, O, with radius O C, equal to the length of the crank, describe the inner or crank pin circle. With C as a centre and C P_1 as radius equal to the length of the connecting rod, describe the circle $P_1 P_2 P_3 P_4$. With O as a centre and O P_3 as a radius, describe a circle; again, with the centre, O, and radius, O P_1, describe the large outer circle.

Now, suppose the crank to be fixed in the position, O C, and the cylinder to revolve round the centre, O, in the direction of the hands of a watch, as indicated by the arrows, then the connecting-rod (which is supposed for the purposes of explanation to be connected directly to the piston) will cause the piston to move inwards during the first half, and outwards during the second half of the revolution. The positions P_1, P_2, P_3, and P_4 represent the piston at 0°, 90°, 180°, and 270° of the revolution. For any

Digitized by Google

required angle, O C P, between the crank, O C, and the connecting-rod, C P, the position of the piston is indicated by the position, P. The radial lines between the large outer circle and the inner circle of radius, O P, indicate the distance of the piston from the outer end of the cylinder; for the path of the piston lies in the line of the circle P_1, P_2, P_3, P_4. Precisely the same

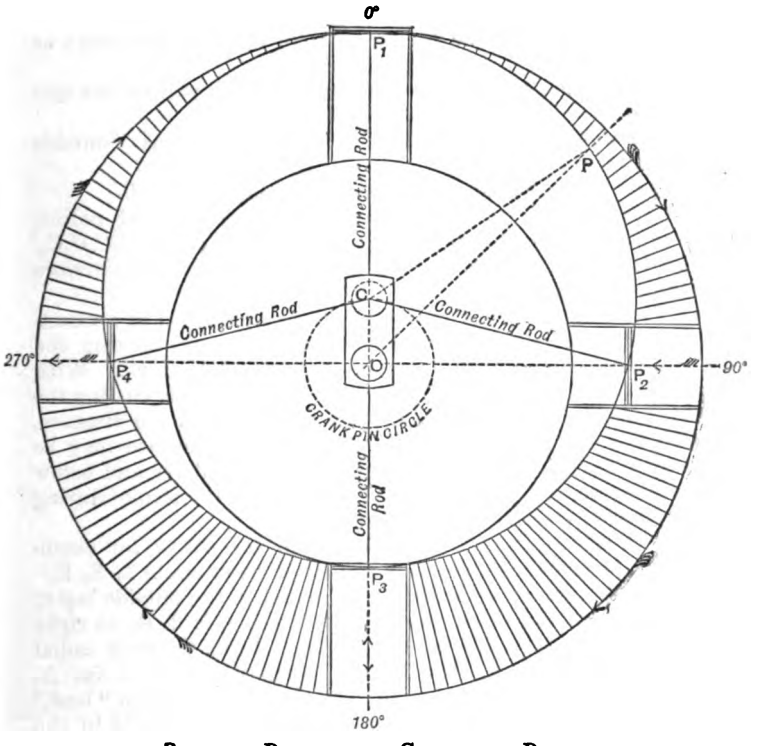

RELATIVE POSITIONS OF CRANK AND PISTON.

reasoning will hold good if we consider the crank to revolve and the cylinder to be fixed (as is usually the case) say in the position at P_1. Then the radial lengths between the outer circle and the circle P_1, P_2, P_3, P_4 respectively represent the distance of the piston from outer end of the stroke for each position of the crank during a revolution.

Digitized by Google

Cause of the Unequal Distribution of Steam during the Forward and the Back Stroke of the Piston.—If the connecting-rod of an engine was infinitely long (and therefore remained always parallel to the centre line of the piston's motion), the point of "cut off," and consequently the distribution of steam, would be equal at both ends of the cylinder; but when the length of the connecting-rod (as usually adopted in practice) is only from 2 to 4 times the length of the crank, the distance to the point of "cut off" is considerably later on the forward stroke than on the return or back stroke.

An explanation of the following two diagrams will render this quite evident.

Firstly. Consider a case when the slide valve has "outside lap" only, and no "lead."

1. Draw a centre line of the piston's motion, C_3, to 10.

2. With any convenient position, O, as a centre and radius, O C_1, equal to the length of the crank, describe a circle, $C_1C_2C_3C_4$, and let the crank revolve in the direction shown by the arrows on the crank pin circle.

3. With centre C_1, and radius equal to the length of connecting-rod (in this case = 3 cranks), describe an arc, cutting the centre line of engine in the position 10 furthest from, C_1. With centre, C_3, and the same radius, describe another arc, cutting the same centre line in position 10 nearest to C_1. Then the distance, 0 to 10, is equal to the piston's stroke. This distance may be conveniently divided into ten equal parts both above and below the centre line, so as to indicate percentages of the stroke during the *forward* and *back* strokes of the piston.*

4. With centre, O, and radius equal to the throw (or eccentricity of the eccentric), describe the inner small circle M E_f E_b.

5. From O plot off a distance, O L, equal to the outside lap of the slide valve, and draw through, L, the line, E_f L E_b, at right angles to the centre line of the engine. From O, draw radial lines, O E_f A, and, O E_b B, cutting the crank pin circle in, A, and, B, and join A B. Then, since the slide valve has no "lead," O E_f is the centre line of the eccentric when the crank is in the position O C_1, and the eccentric turns round from the position, O E_f, to the position, O E_b, in the operation of moving the slide valve during opening and closing the back steam port; consequently, the crank must turn through an equal angle during

* Of course the positions 10 and 10 are in reality the centre of the cross-head at each end of the stroke in ordinary engines having a crank and connecting-rod. To include the length of the piston-rod would extend the figure beyond the limits of the page.

Digitized by Google

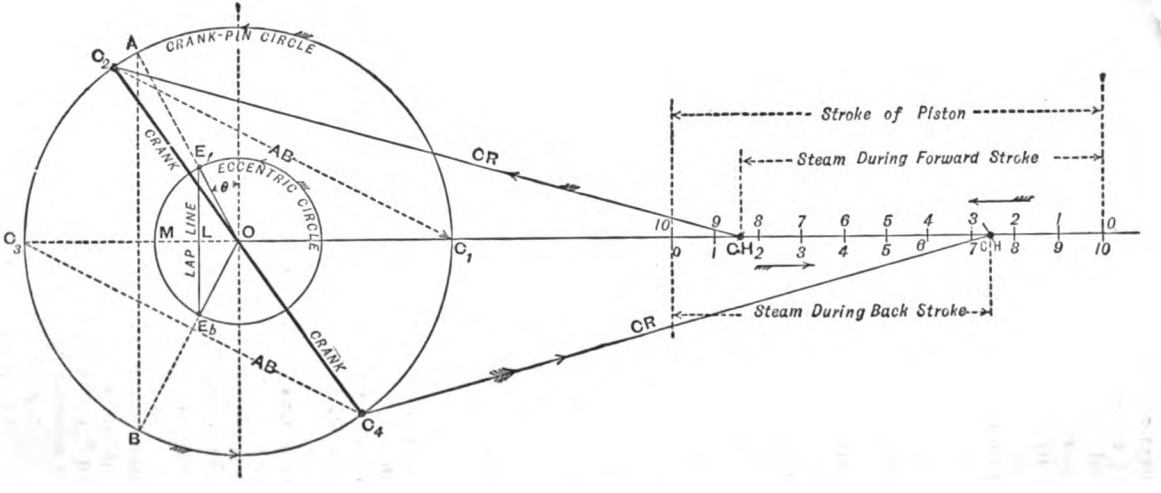

UNEQUAL DISTRIBUTION OF STEAM DURING THE FORWARD AND BACK STROKES OF THE PISTON, DUE TO THE LENGTH OF THE CONNECTING-ROD, WHEN THE SLIDE-VALVE HAS ONLY OUTSIDE LAP.

Digitized by Google

this operation, *i.e.*, an angle equal to A O B. The "angle of advance" of the eccentric is indicated by $< \theta >$.

6. With centre, C_1, and radius, A B, describe an arc, cutting the crank-pin circle in C_2, and join, O, and C_2, by a thick line. Then, O C_2, is the position of the crank when steam is cut off from the cylinder, *i.e.*, when the centre of the eccentric pulley is in the position E_b.

7. With C_2 as a centre and radius equal to the length of the connecting-rod, describe an arc cutting the centre line of the engine in C H (cross-head), nearly midway between positions 8 and 9, above the line, thus showing that steam is cut off at about 85 per cent. of the stroke during the forward movement of the piston and crank.

8. With C_3 as a centre and radius, A B, describe an arc, cutting the crank-pin circle in C_4, and join O, and C_4, by a thick line. Then O C_4 is the position of the crank when steam is cut off from the cylinder during the back stroke of the piston.

9. With C_4 as a centre and radius equal to the length of the connecting-rod describe an arc cutting the centre line of the engine in C H, nearly midway between positions 7 and 8, below the line, thus showing that steam is cut off at about 75 per cent. of the stroke during the backward or return movement of the piston and crank.

Secondly. Consider a similar case in every respect to the last, except with "lead" as well as "outside lap" given to the slide-valve.

Perform precisely the same construction as before, with this addition, viz., that, O N, is equal to the lap O L, plus the lead L N; consequently, O E_f is the centre line of the eccentric when the crank is in the position O C_1, and O E_b, the centre line of the eccentric when steam is cut off during the forward stroke. The eccentric therefore turns round through the angle A O B, while the crank turns from O C_1 to O C_2, and the piston moves from position O to nearly midway between 7 and 8 above the centre line of engine, as indicated by the letter C H.

On the return or back stroke the crank turns from O C_3 to O C_4, while the piston moves from O to a little beyond figure 6, below the centre line. Steam is therefore cut off at about 75 per cent. during the forward stroke, and 62 per cent. during the back stroke, as against 85 and 75 per cent. when no lead was given to the slide-valve.

Fixing Forward and Backward Eccentrics.—In large marine, locomotive, and other engines, the "forward" and back driving eccentrics are often fixed in their permanent position on the crank shaft before the crank is fitted into its bearings. The method by which their proper position is ascertained relatively

Digitized by Google

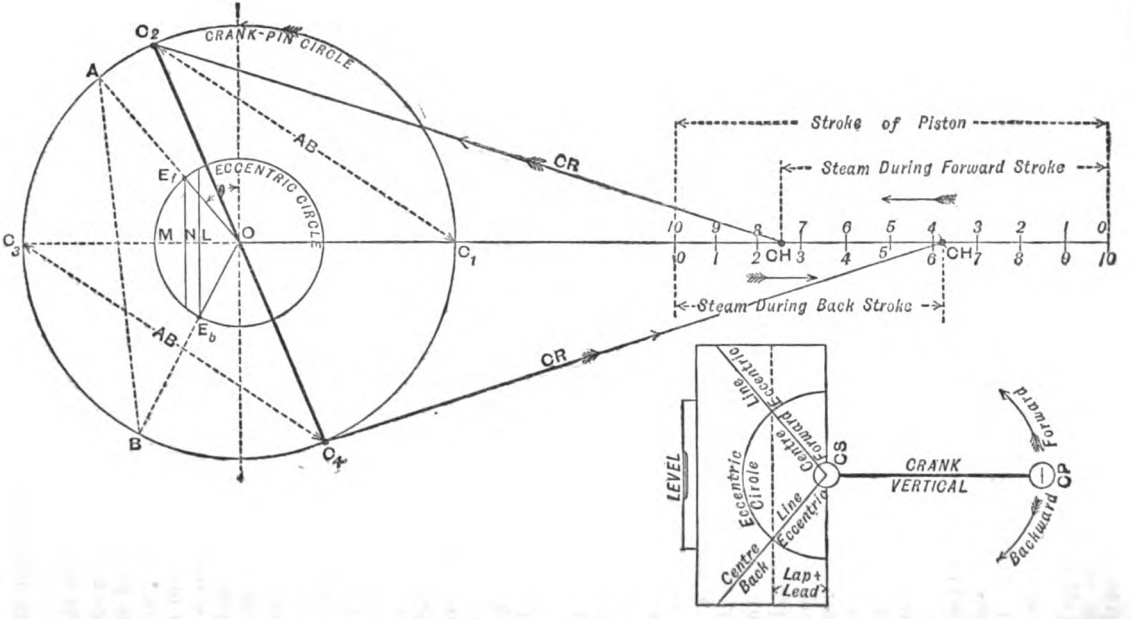

UNEQUAL DISTRIBUTION OF STEAM DURING THE FORWARD AND BACK STROKES OF THE PISTON, DUE TO THE LENGTH OF THE CONNECTING-ROD WHEN THE SLIDE-VALVE HAS LAP AND LEAD. ALSO A METHOD OF FIXING THE POSITION OF THE ECCENTRICS BEFORE FITTING AN ENGINE TOGETHER.

Digitized by Google

to their own crank will be readily understood from the foregoing diagrams and explanation, and by also considering the small figure to the left hand side of the last diagram.

Fix the crank in a vertical position, and place on the crank-shaft a wooden or sheet-iron template, with the upper edge level, having previously drawn upon it the centre lines of the "forward" and "backing" eccentrics, by simply drawing radial lines from the centre to where the "lap plus lead" line cuts the eccentric circle. Now mark on the crank-shaft with a ∧ box-square the centre lines of the feathers for fixing each of the eccentrics, and line off the outline of these feathers where they are to be sunk (parallel to the crank-shaft). Previous to placing the template on the crank-shaft, a semicircular hole has of course been cut from it to fit the crank-shaft. This handy method saves all the time, trouble, and expense of temporarily putting the crank-shaft in its bearings and fitting together the connecting-rod, piston-rod, piston, eccentric straps, eccentric rods, and slide-valve, then turning the whole engine and ascertaining by trial the best position of the eccentrics (which was quite commonly done until a few years ago), and then disconnecting the whole in order to get the feathers sunk in the crank-shaft for keying on the eccentrics in the positions that had been ascertained by trial and observation.

Zeuner's Diagram of Simple Valve Motion.—Of the problems relating to the motion of a slide-valve, the case most commonly recurring in practice, is that in which we have given the position of the crank at the point of cut-off, the travel of the valve, and the amount of lead, and have to determine the angular advance of the eccentric and the amount of outside lap required.

With centre O (see next figure) and radius equal to the throw of eccentric or half-travel of the valve, describe the circle A B C D E, and through O, draw X Y, and X_1 Y_1 at right angles to each other. From O, draw O B, to represent the position of the crank when the steam is to be cut off; this is determined by means of the previous diagrams. With X as centre, and radius X V, equal to the lead of the valve, describe part of a circle, and from B, draw B F, touching this circle. Through O, draw A D at right angles to B F.

On O A* and O D, describe the valve circles A L G and H K D. These are sometimes termed the "primary" and "secondary" valve circles respectively. With O as centre, describe the circle P M N G, touching the line B F at the point N. This circle is

* The line, O A, would be the centre line of an eccentric for the crank in the position, O Y, *and going backwards* or opposite to the direction of the arrow in the figure, while the angle, $A O X_1$, or, θ, would be the *angle of advance* for that eccentric.

Digitized by Google

known as the *outside lap circle*, O M being equal to the outside lap, and M L equal to the lead.

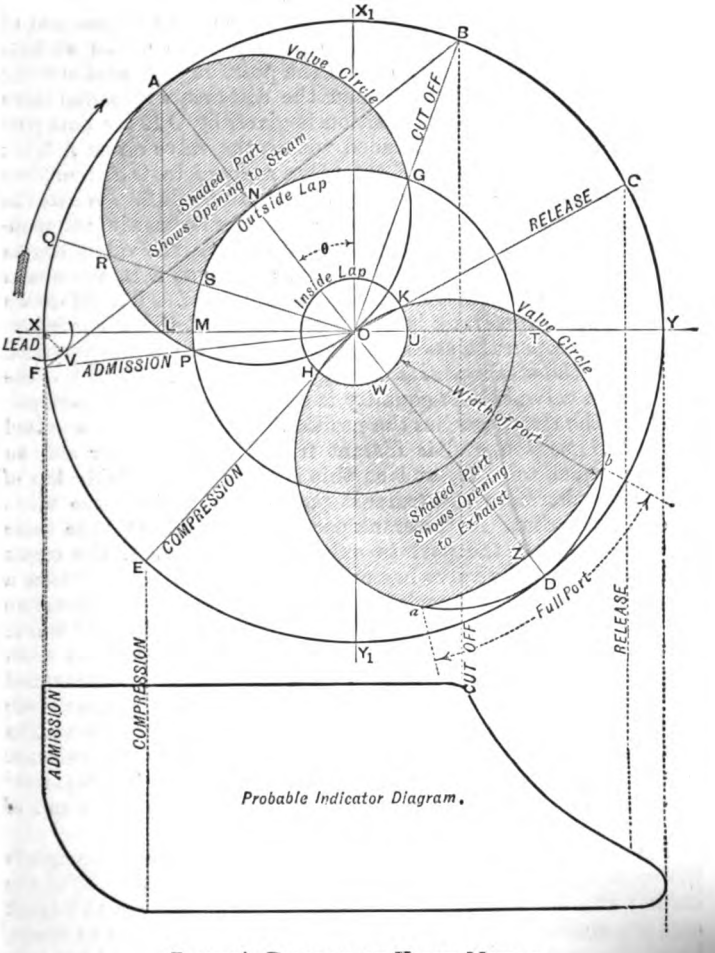

ZEUNER'S DIAGRAM OF VALVE MOTION.

If the position of the crank at the point of compression or the point of release is given, draw O E or O C to represent one these, and where this line cuts the valve circle, H K D, descr

Digitized by Google

a circle with centre O to pass through that point. The radius of this circle gives the amount of the *inside lap*.

Having now completed our diagram, we can see the distance the valve has moved from its central position for any position of the crank, and also the opening of the port to steam at that point. Suppose the crank to be in the position O Q, and moving in the direction of the arrow, then the distance which the valve has moved from its central position is given by O R (or that portion of the line which is included within the valve circle A L G); and since the outside lap of the valve is equal to O S, therefore the opening of the port to steam is equal to R S. When the crank reaches the position O A, the port has its maximum opening equal to A N. As it passes position O A, the valve begins to close the steam port; and when it arrives at O B, the steam port is closed altogether and the steam cut off. Therefore we see that, when the crank is in the position O F, the valve is just beginning to open the steam port; and when it reaches the dead point O X, the steam port is open an amount = L M = X V = the lead of the valve, which equality is easily proved by geometry.

When the crank reaches the position O C, the valve has passed its middle position, and is distant from it on the other side an amount equal to O K; and as this is equal to the inside lap of the valve, therefore the exhaust port opens, and release takes place at this point. As the crank passes the position O C, the valve continues to open the port to exhaust. Thus, when the crank arrives at O Y, the valve has moved from its central position a distance equal to O T; and, since O U is the inside lap, therefore the port is open to exhaust an amount equal to O T − O U = U T. If W Z represents the width of the port, it is evident that, when the crank reaches the position O D, the valve has travelled beyond the port a distance equal to Z D, and, therefore, if the arc *a b*, be drawn through Z, it is apparent that, during the motion of the crank from *b* to *a*, the port remains full open to exhaust. When the crank comes to the position O E the port is completely closed to exhaust; and, since the piston is not yet at the end of its stroke, compression takes place in the cylinder.

The shaded part of the upper or primary valve circle, represents the opening of the port to steam for different positions of the crank; and when the line representing the position of the crank cuts the shaded part, it indicates that the port is open to steam, by an amount equal to that portion of the line included between the two bounding curves of the shaded part. Simi the shaded part of the lower or secondary valve circle re opening of the port to exhaust, and, as we hav open during the passage of the crank from *b*,

Digitized by Google

usual to open the ports fully *to steam*, as explained at the beginning of this Lecture, hence no line corresponding to *a b*, appears in the upper valve circle.

The student should work out a few examples, in order to impress the construction on his memory; for, if once the principle of the diagram is fully grasped, no difficulty will be found with any of the various problems relating to the motion of the slide valve.

For example, given *the travel, the lap, and the angle of advance*, to find the point of cut-off, the lead, etc., draw the circle, A B C D E, to represent the travel, as before; also the outside lap circle, P M N G, and making the angle θ equal to the given angle of advance, draw A D, to represent the centre line of the valve circles. Describe the valve circles as before; then we see that when the crank is in the position, O X, the valve is open an amount equal to L M, therefore L M, is the lead of the valve. Through the point G, where the valve circle cuts the lap circle, draw O B, then O B is the position of the crank at the point of cut-off.

Or, suppose we are given *the travel, the lap, and the lead*, and are required to construct the diagram and to find the angle of advance and the point of cut-off. Having drawn the circle, A B C D E, representing the travel, lay off O M equal to the lap, and M L equal to the lead of the valve. From L, draw L A perpendicular to X Y; then the angle, A O X_1, is the angle of advance, viz., θ, required. With centre, O, and radius, O M, describe the outside lap circle, and on A O describe the valve circle as before. These circles intersect in G. Through G draw O B, then O B, is the position of the crank at the point of cut-off.

Under the diagram of the valve motion we have given the probable indicator diagram, showing the admission, cut-off, release, and compression, taking place at the proper points of the stroke.

LECTURE XIII.—QUESTIONS.

1. Sketch an eccentric, and describe the several parts. What is the throw of an eccentric? Upon what does the amount of throw depend? What is the angle of advance?

2. What is the lap of a slide valve? Draw a section of a simple slide valve and ports, showing the valve (1) without lap, (2) with lap. For what purpose is "lap" given to a slide valve?

3. What effect is produced by putting lap on a slide valve? The lap on the steam side of a slide valve is 1¼ inches, that on the exhaust side is ¼ inch, and the lead is ⅛ inch. What is the opening for exhaust which the valve gives at the lower port when at the top of its stroke. *Ans.* 1⅜ inch.

Digitized by Google

4. Make a diagram showing a crank going backward, or opposite to the hands of a watch, and mark on the crank circle the points of admission, cut-off, release, and compression. Draw the probable curve of pressures underneath of a non-condensing engine showing the atmospheric line.

5. In a direct-acting horizontal engine the lengths of the crank and connecting rod are 1 and 5 feet respectively. How far is the piston from the middle of its stroke when the crank is vertical? *Ans.* 1·23 inch.

6. Taking a direct-acting engine, and disregarding the effect of obliquity of the connecting rod, you are required to assign the proportion of lap to travel of slide valve, in order to cut off steam at $\frac{3}{4}$ of the stroke. *Ans.* $\frac{1}{4}$

7. Given that the travel of a slide valve is 5 inches, outside or steam lap $\frac{3}{4}$ inch, and the angle of advance $22\frac{1}{2}°$, find graphically the position of the crank at the point of cut-off. *Ans.* 140° from dead centre line.

8. In a direct-acting non-condensing engine let the crank be on the back dead centre. Sketch the slide valve and ports, marking the lap and lead. What is the object of putting inside lap to valve?

9. The stroke of the piston in a direct-acting engine is 4 feet, and the length of the connecting rod is 9 feet. How far is the piston from the middle of its stroke when the crank has made $\frac{1}{4}$ of a revolution from a dead point? *Ans.* 2·7 inches.

10. Travel of valve = $8\frac{3}{4}$ inches.
Outside lap = $2\frac{1}{4}$,,
Inside lap = $\frac{1}{4}$,,
Angle of advance = 35°.

Find the points of admission, cut-off, release, and compression, and the amount of lead by a Zeuner's diagram.

11. Given—
Outside lap = $1\frac{1}{4}$ inch.
Maximum opening for steam = $1\frac{1}{4}$,,
Cut-off at $\frac{7}{10}$ of the stroke.

Determine the lead and the angle of advance.

12. Given.
Travel of the valve = $4\frac{1}{4}$ inches.
Outside lap = 1 ,,
Inside lap = $\frac{1}{4}$,,
Angle of advance = 30°
Ans. 3° 36¾′; 56° 23¼′; 23° 37¼′; 36° 22½′. These angles are measured from the dead centres line.

Find the positions of the crank at admission, cut-off, release, and compression, also the lead of the valve.

13. A horizontal engine is constructed with a three-ported or locomotive slide valve and single eccentric for cutting off the steam at half-stroke. In what respects would you alter the working parts in order to cut off steam at three-quarters of a stroke? Explain by sketches the alterations which are necessary.

14. In a direct-acting engine, set out by a diagram the relative positions of the piston and crank during a stroke, on the supposition that the connecting rod is of infinite length or remains parallel to itself. How is this diagram altered when a definite length is assigned to the counecting rod?

15. In a direct-acting engine, find the ratio of the velocity of the crank pin to that of the piston in any given position of the crank.

16. The crank of an engine is 3 feet 6 inches, and the connecting rod 9 feet long. Find the angle which the crank makes with the vertical when the piston is at half stroke. *Ans.* 11° 12′ 44″.

17. Explain the effects produced by putting *outside* and *inside* lap respectively upon the slide valve of an engine. The outside lap is $1\frac{3}{4}$ inches, the lead is $\frac{1}{8}$ inch, and the greatest opening for steam is $1\frac{1}{2}$ inches, what is the travel of the valve, and how far is the valve from its middle position when the piston is just beginning its stroke? (*Adv. S. and A.*, 1887.)

See Appendix at the end for more and later Advanced and Honours Questions.

Digitized by Google

LECTURE XIV.

CONTENTS.—Expansion of Steam—Isothermal, Saturation, and Adiabatic Curves—Liquefaction in the Cylinder—Steam Jacketing—Superheating—Effects of Clearance—Compression or Cushioning—Lead—Wire-drawing—Release—Theory of Compound Engines.

Expansion of Steam.—When saturated steam expands in a non-conducting cylinder, and during its expansion performs mechanical work, its pressure falls—(1) On account of increase of volume; (2) because of liquefaction. The performance of work by the steam causes an equivalent loss of heat, and the amount of heat transformed into work, is sufficient, not only to lower the temperature of the steam to that corresponding to its reduced pressure, but also to cause liquefaction of a portion of it. When a small portion liquefies, it liberates its latent heat and keeps the remainder at the temperature of saturation. Professor Rankine has given the following approximate rule for the relation between pressure and volume of steam expanding under the above conditions:—*The pressure varies nearly as the reciprocal of the tenth power of the ninth root of the space occupied,* that is—

$$\left.\begin{array}{l}\text{If } p = \text{pressure} \\ \text{,, } v = \text{volume}\end{array}\right\} \quad \begin{array}{l} p \propto v^{-\frac{10}{9}} \\ \text{or } p \propto \dfrac{1}{v^{\frac{10}{9}}}\end{array}$$

$$\text{or } p\, v^{\frac{10}{9}} = \text{constant.}$$

This curve, representing the relative pressures and volumes during the expansion, being nearly an adiabatic curve, falls considerably below the hyperbolic or isothermal curve.

In steam engines fitted with a steam jacket, in which the steam enters in a moist condition, a considerable quantity of heat passes from the steam jacket to the steam in the cylinder. When this quantity of heat is sufficient, not only to do the work performed by the steam, but also to convert a portion of the wet steam into dry saturated steam during the expansion, the relation between pressure and volume is expressed approximately by Boyle's law, viz.:—

$$p\, v = \text{constant,}$$

and the curve of expansion is an hyperbola. On account of the simplicity of this formula, and its corresponding curve, in practice it is usually adopted for rough calculations of expansion.

Digitized by Google

When dry saturated steam expands, doing external work, if heat be supplied to it in sufficient quantity just to keep it up to the point of saturation, its pressure is maintained above that given by adiabatic expansion curve (since there is no condensation), but falls below the isothermal or hyperbolic curve, since its temperature does not remain constant, but falls to the temperature corresponding to the reduced pressure. The formula given by Professor Rankine for the pressure and volume of steam expanding in this way is

$$p\, v^{\frac{17}{16}} = \text{constant.}$$

Numerous experiments on this subject were made by Fairbairn and Tate, and the relation between pressure and volume for saturated steam expanding as above was stated by them to be according to the formula—

$$(v - \cdot 41)\,(p + \cdot 35) = \text{constant.}$$

The curve of expansion of steam, according to this formula, is usually known as the "*saturation*" curve. It is similar to Rankine's curve $p\, v^{\frac{17}{16}}$.

It is found in practice that the efficiency of steam expanded so as to receive only sufficient heat to prevent liquefaction, according to the last of these formulæ, is higher than by the other methods; and hence, the "saturation" curve is the one with which the curves of expansion of actual indicator diagrams should be compared, although the "adiabatic" curve $p\, v^{\frac{10}{9}}$ is often used.

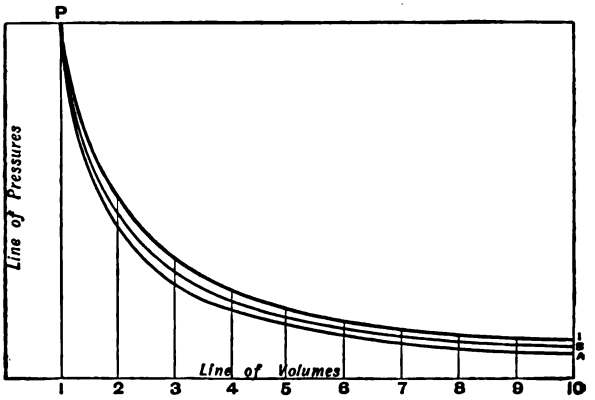

ISOTHERMAL, SATURATION, AND ADIABATIC CURVES.

Digitized by Google

The above diagram shows the three expansion curves—

P I, Isothermal or Hyperbolic curve, $p\,v$ = constant.

P S, Saturation curve, $p\,v^{\frac{17}{16}}$, or $(v - \cdot 41)(p + \cdot 35)$ = constant.

P A, Adiabatic curve, $p\,v^{\frac{10}{9}}$ = constant.

Liquefaction in the Cylinder and Steam Jacketing.—In simple-condensing engines steam of nearly the initial pressure and temperature of the boiler enters the cylinder at the beginning of the stroke immediately after the latter has been in communication with the condenser. Now the temperature of a condenser averages 100° to 140° Fah., and the temperature of the cylinder during exhaust will approximate to this, say about 150° Fah. The steam on entering the cylinder must, therefore, part with a considerable quantity of its heat in raising the temperature of the cylinder, cylinder cover, and piston, and in the case of dry saturated steam the effect of a loss of heat is that a portion of the steam will be liquefied. Throughout the expansion of the steam further liquefaction takes place, on account of the conversion of heat into mechanical work, and the steam becomes moist or wet—a condition which greatly facilitates the absorption of radiant heat. Therefore, when its temperature has fallen considerably below the initial temperature to which the cylinder was heated, the steam begins to absorb heat from the cylinder, and during the latter part of the stroke a certain amount of re-evaporation occurs. The re-evaporation, however, takes place principally during the exhaust, when the pressure in the cylinder is only a few pounds (absolute), and water boils at a very low temperature (about 140° F. to 150° F.)

The cylinder, while in communication with the condenser, becomes reduced in temperature to about 150° F., so that a very large portion of the heat spent in raising the temperature of the cylinder to that of the entering steam, is uselessly thrown away in heating the condenser and creating an opposing back pressure.

Cylinders in which great expansion or liquefaction takes place should, therefore, be steam jacketed. This consists in heating them up by passing hot steam from the boiler into an annular space round the outside of the cylinder barrel, and into the cylinder covers, which are made hollow. The piston also has sometimes been supplied with means of circulating hot steam through it, but this is not usually done in practice owing to the difficulty of applying it.

There can be no doubt that the cylinder barrel is the part which stands most in need of jacketing, since its interior surface is always kept bright and clean by the action of the piston. The steam jacket was invented by Watt (although it is doubtful if

Digitized by Google

he fully understood the principles of its action), and was used by him in all his engines. It was discarded, however, by other engineers of his time, and by his immediate successors, who looked upon it as a needless expense, encumbrance, and complication to the cylinders. The object of the steam jacket is to prevent the alternate heating and cooling of the cylinder which we have just shown to take place. The steam enters a cylinder which is practically as hot as itself, so that there is no initial condensation, and the condensation during expansion is prevented by the passage of sufficient heat from the jacket to the expanding steam, to keep the steam in a saturated condition throughout the stroke. During the expansion of the steam in the cylinder of a jacketed engine, liquefaction must take place as much as in an unjacketed engine, in order to convert the same amount of heat into work, but in the jacketed engine the liquefaction takes place *in the jacket*, where it is harmless, instead of in the cylinder, where the moisture forms the vehicle for the transference of heat from the cylinder to the condenser.

*A moderate amount of liquefaction of the steam in the high and in the intermediate cylinders of compound or multiple expansion engines is, however, considered by the best practical engineers of the present day rather an advantage than otherwise, for it helps to automatically lubricate the moving parts, and, therefore, to dispense with the necessity for using large quantities of oil, which (as will be explained further on) are not only non-effective at high temperatures, but entail the considerable danger of bringing down the furnace crowns, and otherwise do damage when pumped into the boilers with the feed-water. The steam which liquefies on entry into the high or into the intermediate cylinder re-evaporates for the most part on exhausting into the next cylinder, and there does useful work on a larger piston area, although, of course, at a reduced pressure, so that, with properly proportioned cylinders and a comparatively small range of expansion in each, there is very little loss of energy. It is, therefore, found best in practice simply to thoroughly well lag the high-pressure cylinders, so as to prevent radiation of heat from their outer surfaces, *without steam jacketing them*, but to put a steam jacket on the low-pressure cylinder, and to supply this jacket with steam from the intermediate receiver, so as to dry its working surface, and thus make the transfer of heat to the exhausting steam more difficult.

Superheating.—Although superheating is not much practised

*See *Proc. Inst. Engineers and Shipbuilders in Scotland*, discussion on Mr. Dyer's paper "Current Marine Engineering Practice, &c.," January and February, 1886.

Digitized by Google

at the present time, yet it is necessary that a few remarks should be made with regard to its efficiency in preventing liquefaction in the cylinders during expansion. We have already explained (Lecture VIII.) that superheating steam consists in imparting to it an additional quantity of heat after it has been generated and free from contact with the water, so that it possesses a higher temperature than that corresponding to its pressure. The effect of this high temperature during expansion in the steam cylinder of an engine is, that no liquefaction takes place; for, although the steam loses heat and falls in temperature, yet, if sufficiently superheated, its temperature never falls below the *temperature of saturation*, and the steam parts only with some of the additional heat which was supplied to it. Superheating, therefore, may effectually prevent liquefaction in the cylinders, but there are many practical objections to the use of steam of this kind.

Among the first to test the economy of superheating steam was the late Mr. Penn, who, in 1857, fitted superheating apparatus into the s.s. *Valetta*, the immediate result of which was a saving of 20 per cent. in the consumption of fuel. Other engineers at that time adopted the plan of superheating the steam, and for many years after, the practice was general in marine engines. With the increased steam pressures which are now being used, superheating has been entirely given up for the following reasons:—

The pressure of the steam operated upon by Mr. Penn and others, when so much economy was obtained by superheating, was only about 20 lbs. per square inch above the atmosphere, or 35 lbs. absolute. This corresponds to a temperature of 259° Fah., as given by the tables in Lecture VII. (p. 62) so that the steam might have a considerable quantity of heat added to it, without raising its temperature to any injurious extent. When the steam is too hot, the lubricants of the cylinder and slide valves become burnt up, or evaporated, to such an extent, that abrasion of the valve faces, the sides of the cylinder, and the piston rod takes place, causing leakage of steam and excessive wear. The packings in the stuffing boxes are also severely injured and give a great deal of trouble. A temperature of about 360° Fah. seems to have been the limit of practical working, and certainly above 400° Fah. proper lubrication and packing is a difficult matter with dry steam, but it will be seen that this afforded a considerable range of temperature for superheating, with the pressure used at the time of Mr. Penn. Now, however, steam pressures have been increased, until at the present time, pressures of 150 lbs. per square inch are not

Digitized by Google

uncommon in marine practice, 160 to 180 lbs. having been used in a few special cases. The temperature corresponding to 150 lbs. boiler pressure is 366° Fah., so that, even were it desirable to superheat the steam, that could only be practically carried out to a very small extent. But the economy effected by superheating steam was in a large measure due to the increase of efficiency of the boiler in two ways, (1) in utilising a portion of the heat of the waste gases, and (2) in supplying the steam absolutely dry. The superheating was effected by passing the steam through a series of tubes placed across the uptake of the boiler, so that the hot gases, before passing up the chimney, gave up a portion of their heat to the steam. This heat which was thus utilised, would otherwise have been wasted, and the efficiency of the boiler was increased by supplying additional heat to the steam without increasing the consumption of fuel. It was also found that the saving of fuel by superheating the steam was greatest when used with boilers which were liable to "prime" (*i.e.*, to send over to the cylinders a quantity of water along with the steam), for then, if the superheating did nothing else, it thoroughly dried the steam. The effect of wet steam expanding in the cylinder has already been pointed out.

Effects of Clearance.—In actual practice, the piston does not come close up to the end of the cylinder at the end of its stroke, a small space being of necessity left between the piston and the cover to allow for the wear of the journals and other causes. Besides this, there is the volume of the steam ports between the valve face and the cylinder. This combined space between the piston and the cylinder cover, *plus* the steam ports, is termed *the clearance* of the cylinder, and exercises an important influence upon the expansion of the steam; for it must be filled with steam at the moment of cut-off, and the volume of steam expanding is equal to the volume of the cylinder to the point of cut-off + the space at the end of the cylinder + the volume of the steam ports. The ratio of expansion of steam in a cylinder, as usually understood, is

$$= \frac{\text{the volume of cylinder}}{\text{volume to point of cut-off}}, \quad \text{or} \frac{\text{area} \times \text{length of stroke}}{\text{area} \times \text{distance to pt. of cut-off}};$$

but if clearance be taken into account, the *true* ratio of expansion is much less than the ratio given above.

Let c = fraction of the cylinder's capacity representing clearance,
„ r = ratio of expansion *as above*,
„ r_1 = true ratio of expansion;

$$\text{Then } r_1 = \frac{\text{vol. of cylinder + clearance}}{\text{vol. to pt. of cut-off + clearance}} = \frac{1+c}{\frac{1}{r}+c} = \frac{r(1+c)}{1+cr}.$$

Digitized by Google

The difference between r and r_1 is obviously greatest with high ratios of expansion, or early cut-off, when $\frac{1}{r}$ may often be equal to c; hence, with high ratios of expansion the clearance space should be reduced to a minimum. An example may make this clearer. Let steam be cut off at $\frac{1}{8}$ of the stroke, then $r = 8$, also let the clearance capacity $= \frac{1}{8}$ of the capacity of the cylinder;

$$\text{Then, } r_1 = \frac{r\,(1 + c)}{1 + cr} = \frac{8\,(1 + \frac{1}{8})}{1 + 1} = \frac{9}{2} = 4\tfrac{1}{2}.$$

Therefore, the volume of steam admitted to the cylinder is really only expanded $4\frac{1}{2}$ times instead of 8 times; and it is easy to see that the curve of expansion will be materially affected thereby. The diagram shows the theoretical curves of expansion.

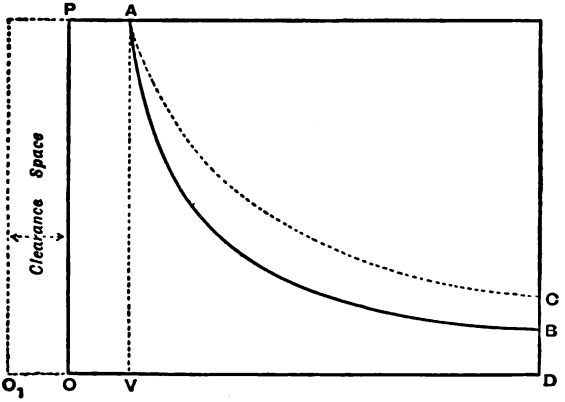

EFFECT OF CLEARANCE ON EXPANSION CURVE.

AB is the curve which would be followed by the steam expanding 8 times with a volume, OV ($\frac{1}{8}$ OD), and pressure, OP. AC is the curve of expansion, which is really followed by the steam when the clearance space is taken into account, the volume being O_1V, the pressure the same as before, and the expansion then being only $4\frac{1}{2}$ times. This shows the importance of taking the clearance into account in considering indicator diagrams.

In practice it is impossible to avoid clearance altogether, but the losses arising from it may be considerably reduced by compression of a portion of the steam on the exhaust side.

Compression or Cushioning.—This is effected, as we pointed out

Digitized by Google

in Lecture XIII., by closing the exhaust port before the piston has completed its stroke, when any steam still remaining in the cylinder is compressed into the clearance spaces. If the compression were so great as to raise the pressure of the steam in the clearance spaces to the initial pressure of the steam, loss from the clearance spaces would be avoided, since they would already be full of steam at the initial pressure, when the piston began its return stroke.* The mean pressure of steam would, however, be greatly reduced by such excessive cushioning. The useful extent of cushioning, considered with reference to the motion of the engine alone, depends chiefly on the speed of the engine. In very fast-running engines a large amount of cushioning is necessary, in order to check the momentum of the moving parts gradually, and reverse the direction of motion without shocks; but if the piston speed be slow, a less compression will suffice to keep the motion smooth and free from jerks.† These considerations limit the amount of compression to be used for any particular case. In engines having a high ratio of expansion and great piston velocity, the exhaust steam might with advantage be compressed up to the initial pressure, but in other cases, a moderate compression is all that can be recommended. The effect of compression on the indicator diagram is a sudden rise in the exhaust or back pressure line just before steam enters, and is shown on the following diagram by the line *m n*.

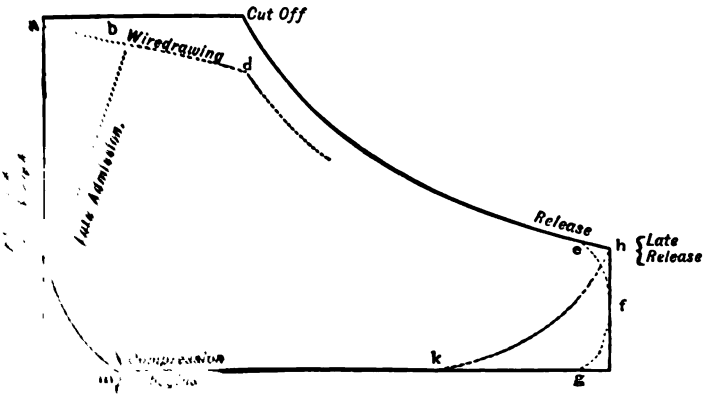

[illegible], WANT OF LEAD, WIRE-DRAWING, AND RELEASE.

[illegible] up to the initial pressure of the steam has a [illegible] in unjacketed cylinders, viz., that the cylinder [illegible] up to the initial [illegible]perature of the steam [illegible] p. 114. [illegible]e XVII.

Digitized by Google

by the work done upon it, and condensation of the entering steam may, therefore, be greatly reduced.

Lead.—It is necessary in practice, especially with high-piston speeds and low-pressure steam, to open the valve to steam before the piston has reached the end of its stroke, in order to assist the compression and maintain the full initial pressure as the piston moves forward. This amount of opening is termed the "lead" of the valve. If no lead be allowed, the valve is not sufficiently open when the piston begins to move forward, and the full pressure of steam does not come upon the piston until it has travelled over a part of the stroke. The loss is shown by the rounded corner, *ab*, of the diagram.

Wire-drawing.—When the steam, through insufficiency of valve opening, contracted ports, or throttling, is prevented from following up the piston at full pressure, it is said to be *wire-drawn*, and its effect upon the indicator diagram is the fall of pressure shown by the dotted line, *cd*. With a common slide valve, a certain amount of wire-drawing will always take place at the point of cut-off, due to the slowness with which the valve closes the port. This is clearly exhibited in the diagrams of all engines fitted with such valves, by a rounded corner at the point of "cut-off." A perfect valve should open quickly, and remain open until the point of cut-off, then close quickly. These conditions are not fulfilled by any of the valves in ordinary use, unless, perhaps, the Corliss valve gear. The opening to steam at any point should be sufficiently large to allow the steam to pass through at a velocity of from 6,000 to 8,000 feet per minute.

Release.—Besides admitting steam before the end of the stroke, it is also necessary to release the steam on the other side of the piston before the end of the stroke, in order to prevent excessive back pressure. This has the effect of rounding the right-hand corner of the diagram, as shown by the line, *efg*, showing a very small loss, whereas, if steam be carried to the end of the stroke before exhausting, the diagram will take the form shown by the line, *hk*, and excessive and wasteful back pressure will be the result.

Theory of Compound Engines.—Having now studied the principal points in connection with the *actual* expansion of steam in a steam cylinder, we are in a position to explain the advantages of the compound engine over the simple expansive engine.

While explaining Watt's diagram of work, we pointed out the gain in work done by using steam expansively; but, while using low-pressure steam, such as that in use at the time of Watt, even at a later period, only a limited amount of expansion could be used. When the advantages of high-pressure steam became

Digitized by Google

generally recognised and greater pressures were adopted, a higher ratio of expansion became possible, and it is economically to take advantage of this increased amount of available expansion, that engines are now made on the compound principle.

From what has been already stated, the student will see that the amount of liquefaction which takes place in the cylinder of an engine, varies with the difference between the initial and final temperatures, therefore the loss from liquefaction in any cylinder increases as we increase the ratio of expansion. The principle of the compound engine, then, consists in dividing the expansion into two or more stages, and carrying out each stage of expansion in a separate cylinder, so as to reduce the variation of pressure and temperature in each cylinder. For some time there was great diversity of opinion as to the advantages of the compound system, some maintaining that it was a needless complication; but actual practice has now proved beyond doubt that, if properly proportioned, the compound engine is much more economical in consumption of fuel for a given power, than the simple expansive engine. Not only is the amount of liquefaction reduced in the compound system, but any re-evaporation of condensed steam which may take place in the high-pressure or intermediate cylinders during exhaust, is not a direct source of loss, for, although increasing the back pressure in these cylinders, it is not discharged into the condenser, but passes on to the next cylinder, and does useful work there. The loss from clearance is also less in compound engines, for, as we have shown, the loss from this cause increases with the ratio of expansion. In the simple engine, with a high ratio of expansion, there is of necessity a wide variation of pressure on the piston. This causes an irregularity of rotational effort on the crank-pin, which is objectionable, and the initial stress (which all the working parts must be strong enough to withstand) is far in excess of the mean stress. This is another disadvantage which is remedied by the compound arrangement. Numerous diagrams of compound engines will be given later on.

FOOTNOTE TO PAGE 112.—This would only be strictly true of an engine which expanded right down to the back pressure line, an engine whose indicator card had only *four* sides, in fact a *Carnot's reversible engine*, where the cooling takes place entirely by expansion, and the heating entirely by compression. The indicator card of a practical steam engine has *five* sides, and as there is a sudden drop of temperature from the point of release to that of the back pressure, we actually expend more work upon compressing the clearance steam than it exerts on the power stroke.

Digitized by Google

LECTURE XIV.—QUESTIONS.

1. State your reasons concisely for concluding that it is more economical to use steam at a pressure of 3 or 4 atmospheres, with expansion and condensation, rather than to employ it at the atmospheric pressure with condensation, but without expansion.

2. Trace what happens in the working of a steam engine when the cylinder is not provided with a steam jacket.

3. State the law according to which superheated steam expands in volume when its temperature is raised under a constant pressure. When steam is superheated for the supply of an engine in the usual manner, does its pressure rise above that in the boiler? Explain fully.

4. Distinguish between *superheated* steam and *saturated* steam. According to what law is the pressure of superheated steam affected when it is compressed into a smaller space? What happens in the case of saturated steam?

5. What is the object of a steam jacket? In what way does the absence of the jacket affect the indicator diagram?

6. Explain the effects of "lap," "lead," "cushioning," "wire-drawing," and "release," on the indicator diagram, making such sketches as may be necessary to render your answer clear. Mark also the points of "admission" and "cut-off."

7. Show that no more work is obtained from a given quantity of steam by passing it through two cylinders, as in a compound engine, than by admitting it into a low-pressure cylinder only with the same degree of expansion, on the supposition that no heat is conducted away and radiated by the sides of the cylinders.

8. An engine uses 10 lbs. of steam per minute, the feed temperature is 60° F., the boiler temperature 300° F., and that of the condenser 104° F., what is the theoretical maximum efficiency of the engine? State Regnault's formula for the total heat of steam at a given temperature, and deduce the amount of heat which each pound of steam has received in the boiler. What horse-power would be developed if the engine worked as a perfect engine? *Ans.* ·258; 1144·4; 66 H.P.

9. Explain the difference between isothermal, saturation, and adiabatic expansion of steam, and draw roughly the curves for each in one diagram.

10. What is meant by the term "clearance?" Assuming that the clearance has been reduced to an equivalent length of the stroke of piston, which is 4 feet, and taking the case where steam is cut off at half stroke, the clearance being 3 inches, you are required to compare the pressure of the steam, when 3 feet of the stroke are made, with the pressure under the same circumstances if there were no clearance. (*Adv. S. and A. Exam.*, 1888.)

11. A compound condensing engine, with cranks at right angles and an intermediate receiver, has cylinders of 14 and 24 inches diameter respectively, each with a stroke of 36 inches. Draw the indicator diagrams which you would expect to obtain from the cylinders supposing steam of 90 lbs. absolute pressure is admitted to the high-pressure cylinder and is cut off at half stroke, the steam in the low-pressure cylinder being cut off at $\frac{5}{8}$ stroke, and the condenser showing a back pressure of 4 lbs. absolute. Attach a scale of inches and pounds to your diagram. (*Adv.*, 1888.)

Digitized by Google

APPENDIX TO LECTURE XIV.

EMPIRICAL FORMULÆ FOR THE PRESSURE, DENSITY, VOLUME, AND WORK OF STEAM, BY MR. JAMES BROWNLEE, ENGINEER, GLASGOW.

Let t = temp. Fah. at different pressures in table, page 118.
τ = absolute temperature = $t + 460$.
p = absolute pressure in lbs. per square inch.
P = absolute pressure in lbs. per square foot, or $P = 144\,p$.
L = latent heat in *foot-lbs.* of one cubic foot of steam, or say as much heat as would produce one cubic foot more in the state of vapour than in the liquid state, under any constant pressure, P.
D = density or weight of one cubic foot of ordinary steam under any pressure, P.
V = volume in cubic feet of one lb. weight of steam at any pressure, P.

1. *To find the pressure, p, at any temperature, t* .—

$$\text{Log. } p = 6{\cdot}1993544 - \frac{2938{\cdot}16}{t + 371{\cdot}85};$$

and, conversely, to find the temperature, t, the pressure being given—

$$t = \left(\frac{2938{\cdot}16}{6{\cdot}1993544 - \text{log. } p}\right) - 371{\cdot}85.$$

2. *The latent heat in foot-lbs. of one cubic foot of steam at any pressure, P lbs., per square foot* .—

$$L = P\left[\frac{\tau \times 2938{\cdot}16 \times \log._{\varepsilon} 10}{(t + 371{\cdot}85)^2}\right], \text{ or}$$

$$\text{Log. } L = 3{\cdot}83029 + \log. P + \log. \tau - 2 \log. (t + 371{\cdot}85).$$

3. *To find the latent heat in units of heat*, divide the above by 772.

The weight in lbs. of one cubic foot of steam .—

$$D = \frac{p^{\cdot 941}}{330{\cdot}36}, \text{ or log. } D = {\cdot}941 \log. p - 2{\cdot}519.$$

4. *The volume, V, in cubic feet of one lb. of steam at any pressure, p, is* .—

$$V = \frac{330{\cdot}36}{p^{\cdot 941}}, \text{ or log. } V = 2{\cdot}519 - 941 \log. p;$$

and, therefore, log. P V = 4·55 + ·059 × log. P.

Digitized by Google

When any volume, V_1, cubic feet of steam expands under pressure to the larger volume, V_2, and just sufficient heat being supplied to prevent any portion from condensing while expanding to the larger volume, V_2, the initial pressure, P_1, would fall to the lower pressure, P_2, and

$$P_2 = P_1\left(\frac{V_1}{V_2}\right)^{\frac{1}{1\cdot0627}} = P_1\left(\frac{V_1}{V_2}\right)^{1\cdot0627}$$

Then, as $\frac{1\cdot0627}{\cdot0627} = 16\cdot95$, let us suppose one lb. of steam to be admitted against a movable piston at the constant pressure, P_1; then expanded down to any lower pressure, P_2 (sufficient heat being supplied through the casing to prevent any portion of the steam within the cylinder from liquefying while expanding), and finally expelled into the atmosphere or condenser at the terminal pressure, P_2.

5. *The maximum work in foot-lbs. per lb. of steam under these conditions would be—*

$$W = \frac{1\cdot0627}{\cdot0627}(P_1V_1 - P_2V_2) = 16\cdot95(P_1V_1 - P_2V_2).$$

If the terminal pressure, P_2 (down to which the steam expands) is higher than the atmospheric pressure, or than the pressure in the condenser, if a condensing engine, the pressure on opening the exhaust passage will in that case fall to some lower pressure, P_3, and we will then obtain the additional work $= V_2(P_2 - P_3)$; so that—

6. *The maximum work per lb. of steam admitted into the cylinder is given by the expression—*

$$W = 16\cdot95\,(P_1V_1 - P_2V_2) + V_2(P_2 - P_3).$$

From the above formula the value of, W, was calculated as entered in the following table.

Note.—If steam followed Boyle's law while expanding, the maximum work per lb. of steam would be strictly proportional to the logarithm of the number of times which the pressure in the condenser is contained in the boiler pressure.

Digitized by Google

CONDENSING ENGINE.

W = work in ft.-lbs. of 1 lb. of steam always expanding down to 5 lbs. per sq. inch. and allowing a back pressure of 2 lbs.; or, $W = 16{\cdot}95\ (P_1 V_1 - P_2 V_2) + 31{,}390$.

$\frac{V_2}{V_1}$ = ratio of expansion. H = the units of heat required for the production of 1 lb. steam from water supplied at 100° Fah.

h = the units of heat required to be supplied through the cylinder casing to prevent condensation while expanding.

$h = 16{\cdot}95\ (P_1 V_1 - P_2 V_2) \div 772 - {\cdot}305\ (t_1 - t_2)$, where $t_2 = 162°{\cdot}3$ = temp. at 5 lbs. pressure.

w = the work in foot-lbs. per unit of heat expended $= \frac{W}{H + h + 21}$.

C = coal in lbs. per horse-power per hour $= \frac{33{,}000 \times 60}{10{,}000 \times w} = \frac{198}{w}$.

Total Pressure in lbs. per Square Inch.	Temperature, Fahrenheit Degrees.	Total Pressure in lbs. per Square Foot.	Volume in Cubic Feet of 1 lb. of Steam								
1	2	3	4	5	6	7	8	9	10	11	12
p	t	P_1	V_1	$P_1 V_1$	W	$\frac{V_2}{V_1}$	$H = 1013{\cdot}4 + {\cdot}305\,t$	h	$H + h + 21$	w	C
1	102·1	144	330·36	47,570	...	...	1044·5	...	...	...	...
2	126·3	288	172·06	49,550	...	...	1051·9	...	...	...	...
3	141·6	432	117·50	50,760	...	...	1056·6	...	...	...	...
4	153·1	576	89·63	51,627	...	...	1060·1	...	...	...	...
5	162·3	720	72·66	52,316	31,390	1	1062·9	0	1083·9	29	6·83
6	170·1	864	61·20	52,880	40,950	1·187	1065·3	9·9	1096·2	37·3	5·31
8	182·9	1,152	46·69	53,780	56,200	1·55	1069·2	25·8	1116	50·3	3·93
10	193·3	1,440	37·84	54,500	68,400	1·92	1072·4	38	1131·4	60·4	3·28
15	213·1	2,160	25·84	55,815	90,692	2·81	1078·4	61·4	1160·8	78·1	2·54
20	228·0	2,880	19·71	56,766	106,812	3·686	1083·0	77·2	1181·6	90·3	2·21
25	240·1	3,600	15·98	57,523	119,640	4·55	1086·6	90·6	1198·2	100	2
30	250·5	4,320	13·46	58,155	130,354	5·398	1089·8	101·3	1212·1	107·5	1·84
40	267·3	5,760	10·27	59,146	147,150	7·076	1094·9	118	1233·9	119·2	1·66
50	280·2	7,200	8·324	59,930	160,438	8·73	1098·9	131	1250·9	128·2	1·54
60	292·7	8,640	7·010	60,560	171,116	10·36	1102·7	141·3	1265	135·3	1·46
70	302·9	10,080	6·065	61,130	180,772	11·98	1105·8	150·6	1277·4	141·5	1·4
80	312	11,520	5·350	61,624	189,150	13·58	1108·6	158·6	1288·2	146·8	1·35
90	320·3	12,960	4·788	62,045	196,286	15·18	1111·1	165·4	1297·4	151·3	1·31
100	327·8	14,400	4·335	62,430	202·800	16·76	1113·4	171·7	1306·1	155·4	1·27
120	341	17,280	3·6516	63,100	214,170	19·90	1117·0	183·0	1321·0	162·2	1·22
125	344·4	18,000	3·514	63,250	216,710	20·68	1118·4	184·5	1324·8	163·5	1·21
150	358·5	21,600	2·960	63,937	228,352	24·55	1122·7	195·3	1339	170·5	1·16
175	370·8	25,200	2·560	64,520	238,231	28·38	1126·5	204·4	1351·9	176·2	1·12
200	381·9	28,800	2·258	65,040	247,000	32·17	1129·9	212·3	1363·2	181·2	1·09
240	397·5	34,560	1·902	65,734	258,820	38·2	1134·6	222·9	1378·5	187·7	1·06
250	401·1	36,000	1·830	65,890	261,440	39·7	1135·7	224·9	1381·6	189·3	1·05
300	417·5	43,200	1·542	66,617	273,770	47·12	1140·7	236·2	1397·9	195·7	1·012

NON-CONDENSING ENGINE.

$W = 16{\cdot}95\ (P_1 V_1 - P_2 V_2)$.

$\frac{V_2}{V_1} = \frac{25{\cdot}85}{V_1}$.

$H = 965{\cdot}5 + {\cdot}305\ (t_1 - 212°)$.

$h = W \div 772 - {\cdot}305\ (t_1 - 213{\cdot}1)$.

$w = W \div (H + h)$.

$C = 198 \div w$.

NOTE.—The quantity of heat transmitted to a boiler, per lb. of coal, seldom exceeds 10,000 units.

13	14	15	16	17	18
W	$\frac{V_2}{V_1}$	H	h	w	C
...	...	...	...	...	...
...	...	...	...	...	...
...	...	...	...	...	...
...	...	...	...	...	...
...	...	...	...	...	...
...	...	...	...	...	...
...	...	...	...	...	...
...	...	...	...	...	...
...	...	...	...	...	...
0	1	965·5	0	0	...
16,118	1·31	970·0	15·9	16·3	12·1
28,950	1·61	973·7	29·3	28·9	6·85
39,660	1·92	976·9	40	39	5·08
56,456	2·52	982	56·6	54·4	3·64
69,745	3·11	986·1	69·8	66	3
80,420	3·69	989·8	80	75·2	2·62
90,084	4·26	992·9	89·3	83·2	2·38
98,456	4·61	995·7	97·3	90	2·2
105,592	5·40	998·2	104	95·8	2·07
112,120	5·96	1000·5	110·4	101	1·96
123,480	7·07	1004·6	120·9	109·7	1·80
126,015	7·35	1006·5	123·2	110·7	1·79
137,660	8·73	1009·8	134	120·3	1·65
147,540	10·09	1013·6	143	127·5	1·55
156,354	11·44	1017	151	135·2	1·46
168,130	13·6	1021·7	161·5	143·3	1·38
170,750	14·12	1022·8	163·8	143·3	1·38
183,080	16·76	1027·8	174·8	152·2	1·30

Digitized by Google

In the first column of the Table are entered the absolute pressures in lbs. per square inch. In the second, the temperature Fah. corresponding to these pressures—beginning with a pressure of 1 lb. and temperature of 102°·1, and going up to a pressure of 300 lbs. and temperature of 417°·5. In the third column, the pressure, P, in lbs. per square foot is simply 144 times the pressure in lbs. per square inch. The figures in the fourth column denote the volume in cubic feet of 1 lb. weight of steam at the various pressures—the volume at 1 lb. per square inch, or 144 lbs. per square foot, being 330·36 cubic feet; whereas, at 300 lbs. pressure, the volume is only 1·542 cubic feet. The figures in the fifth column are simply the product of those in the third and fourth.

If, for example, a movable piston were propelled through 330·36 cubic feet of space, under a pressure of 144 lbs. per square foot, the work done would be 144 × 330·36 = 47,570 foot-lbs.; but, since the back pressure of steam is generally much more than 144 lbs. per square foot, no useful work can be obtained from steam of that pressure.

In the sixth column is entered the maximum useful or effective work in foot-lbs. of 1 lb. weight of steam of the various pressures and temperatures figured in the first and second columns, under the following conditions:—1st, The steam shall be expanded down to a constant pressure of 5 lbs. and temperature of 162°·3, and shall be supplied with heat just sufficient to prevent any portion from liquefying while expanding; and 2nd, It is assumed, in computing these figures, that the back pressure of steam against the piston is constantly 2 lbs. per square inch, or 288 lbs. per square foot. It will be observed that the first figures in this sixth column are 31,390, which is the maximum useful work of 72·66 cubic feet (1 lb. weight) of steam (with no expansion) when admitted at a constant pressure of 720 lbs. per square foot and discharged into the condenser, under a constant opposing pressure of 288 lbs. per square foot. The difference of pressure on the opposite sides of the piston being 720 − 288 = 432 lbs. per square foot. The useful effect obtained while the piston travels 72·66 feet under an active pressure of 432 lbs. is 432 × 72·66 = 31,390 foot-lbs. as entered in column six.

The quantity of heat required to produce 1 lb. of steam, at a pressure of 5 lbs., from water supplied from the hot well at a temperature of 100°, is 1013·4 + ·305 × 162·3 = 1062·9 = H, as entered in column eight. When the exhaust valve opens, the pressure suddenly falls from 5 to 2 lbs., and in place of 72·66 cubic feet of steam at a temperature of 162°·3, we have left in the cylinder 72·66 feet at a temperature of 126°·3 and pressure of 2 lbs., which will weigh ·422 lbs.

Now, while this ·422 lbs. expands from a pressure of 5 to 2 lbs., and does work in expelling from the cylinder ·578 lbs., nearly 14 units of heat must be supplied through the casing, so as to prevent any portion of this ·422 lbs. from liquefying while expanding, and another 7 units, it is roughly estimated, may be taken up by the first ·578 lbs., which suddenly leaves the cylinder when the exhaust-valve opens, so that the total heat required per lb. of steam under these conditions, is 1062·9 + 21 = 1083·9, as entered in column ten. Then, since 31,390 foot-lbs. is the work obtained from 1083·9 units of heat, the work per unit of heat, w = 31,390 ÷ 1083·9 = 29 foot-lbs., as entered in column eleven. The quantity of heat transmitted to the boiler, per lb. of *Scotch* coal consumed, seldom exceeds 8,000 units, whereas, one lb. of the best Welsh coal often yields more than 10,000 units, and this is, therefore, the quantity assumed to be transmitted to the boiler in computing the coal required per horse-power per hour. Since 33,000 foot-lbs. per minute, or 60 × 33,000 = 1,980,000 foot-lbs. per hour, is tak

Digitized by Google

as one horse-power, the quantity of coal required per horse-power per hour in the foregoing example will be $C = \frac{1,980,000}{10,000 \times 29} = \frac{198}{29} = 6{\cdot}83$ lbs., as entered in column twelve.

Let us now look down the first column of the Table till we come to a pressure, p, of 15 lbs., or $P_1 = 2,160$ lbs., per square foot when the volume, V_1, of 1 lb. of steam is 25·84 cubic feet, and the product, $P_1 V_1 = 2,160 \times 25{\cdot}84 = 55,815$, as entered in the fifth column. Now, supposing this 25·84 cubic feet of steam to be admitted at a pressure of 15 lbs., then expanded to a volume of 72·66 cubic feet—that is, $72{\cdot}66 \div 25{\cdot}84 = 2{\cdot}81$ times $= \frac{V_2}{V_1}$, as entered in column seven—when the pressure would fall to 5 lbs., and finally expelled at the latter pressure by the return of the piston, the work per lb. of steam under these conditions would be $16{\cdot}95 (P_1 V_1 - P_2 V_2) = 16{\cdot}95 \times (55,815 - 52,316) = 16{\cdot}95 \times 3,499 = 59,302$ foot-lbs—to this add the work formerly shown to be obtained from 1 lb. of steam of 5 lbs., working against a back pressure of 2 lbs. per square inch—viz., $V_2 (P_2 - P_3) = 72{\cdot}66 \times (720 - 288) = 31,390$ foot-lbs., and $31,390 + 59,302 = 90,692$ foot-lbs. $= W$, as entered in column six—this being the maximum useful effect of 1 lb. of steam of atmospheric pressure when expanded to 2·81 times the initial volume and finally discharged into the condenser at a pressure of 2 lbs.

The quantity of heat required to generate this steam from water at 100° is $H = 1013{\cdot}4 + {\cdot}305 \times 213{\cdot}1 = 1078{\cdot}4$, as entered in column eight, and the additional quantity requisite to prevent any portion from liquefying while expanding and falling from the initial temperature, $t_1 = 213°{\cdot}1$, to the lower temperature, $t_2 = 162°{\cdot}3$, and pressure of 5 lbs. is $h = 16{\cdot}95 (P_1 V_1 - P_2 V_2) \div 772 - {\cdot}305 (t_1 - t_2) = 59,302 \div 772 - {\cdot}305 (213{\cdot}1 - 162{\cdot}3) = 76{\cdot}9 - 15{\cdot}5 = 61{\cdot}4$ units, as figured in column nine; and, assuming the cylinder to be robbed of 21 units, as before mentioned, while the steam is escaping into the condenser, the whole heat required per lb. of steam will then be $H + h + 21 = 1078{\cdot}4 + 61{\cdot}4 + 21 = 1160{\cdot}8$, as entered in the tenth column, and the work per unit of heat transmitted to the boiler is $w = \frac{W}{H + h + 21} = 90,692 \div 1160{\cdot}8 = 78{\cdot}1$ foot-lbs., as entered in column eleven. Hence, the coal required per hour per horse-power computed, as has been shown, is $C = \frac{198}{w} = 198 \div 78{\cdot}1 = 2{\cdot}54$ lbs. nearly, as entered in column twelve. In looking down this column (twelve) of the Table, it will be observed that only half this quantity of coal (1·27 lbs. per hour per horse-power) is required with steam admitted at 100 lbs. pressure, expanded to 16·76 times the initial volume when the pressure would fall as before to 5 lbs. With steam of 60 lbs. (which corresponds to about 45 lbs., as indicated by the ordinary pressure gauge) expanded to 10·36 times (the pressure again falling to 5 lbs.) the coal consumed per indicated horse-power per hour, as computed and entered in column twelve of the Table, is only 1·46 lbs. The work per unit of heat transmitted to the boiler being 135·3 foot-lbs., which corresponds to an engine efficiency of $135{\cdot}3 \div 772 = {\cdot}175$ or 17½ per cent., and this is perhaps a higher duty than has yet been realised in practice from any heat engine whatever. It must be observed, however, that no allowance is here made for loss from clearance space.

The last six columns of the Table refer to a non-condensing engine, and as the feed-water can be readily heated by the exhaust steam to about

Digitized by Google

212°, it is assumed that the boiler is supplied with water at this temperature, so that the quantity of heat required to convert one lb. of this water into steam at any higher temperature, t_1 becomes $H = 965{\cdot}5 + {\cdot}305\ (t_1 - 212)$. At a pressure of 100 lbs., for example, when the temperature is 327·8, we have $H = 965{\cdot}5 + {\cdot}305\ (327{\cdot}8 - 212) = 1000{\cdot}8$, as entered (opposite 100 lbs. pressure) in column fifteen. At this pressure $P_1 V_1 = 62{,}430$, while at 15 lbs. $P_2 V_2 = 55{,}815$. Hence, by admitting 4·325 cubic feet of 100 lbs. pressure steam, then expanding to a volume $V_2 = 25{\cdot}84$ cubic feet, that is $25{\cdot}84 \div 4{\cdot}335 = 5{\cdot}96$ times $= \left(\frac{V_2}{V_1}\right)$, as entered in column fourteen. When the pressure would fall to 15 lbs., and finally expelling at the latter pressure, the maximum effective action could not exceed $W = 16{\cdot}95\ (62{,}430 - 55{,}815) = 112{,}120$, as entered in column thirteen; and the quantity of heat which must be supplied to this steam while expanding from 100 down to 15 lbs. is $h = 112{,}120 \div 772 - {\cdot}305\ (327{\cdot}8 - 213{\cdot}1) = 110{\cdot}4$, as figured in column sixteen. Then, as the whole heat taken from the boiler is $H + h = 1000{\cdot}5 + 110{\cdot}4 = 1111$ units, the work, w, is $112{,}120 \div 1111 = 101$ foot-lbs. per unit of heat, which corresponds to an efficiency of $101 \div 772 = {\cdot}13$, or say of 13 per cent. of the heat supplied to the engine being converted into work. The coal required per horse-power per hour being $198 \div w = 198 \div 101 = 1{\cdot}96$ lbs., as entered in the last column of the Table.

With 100 lbs. pressure steam expanded to 16·76 times the initial volume, it will be observed that the condensing engine requires only $1{\cdot}27 \div 1{\cdot}96 = {\cdot}65$, or say 65 per cent. of the coal to do the same work as a non-condensing engine, when working with steam of the 100 lb. pressure, but expanded to only 5·96 times the initial volume.

Digitized by Google

LECTURE XV.

CONTENTS.—Watt's Indicator—Richard's Indicator—Taking of Indicator Diagrams—Examples of Indicator Diagrams from Non-condensing, Condensing, Two-Cylinder Compound Engines, Triple Expansion Engines.

Watt's Indicator.—Watt was the first who recognised fully the importance of gaining some knowledge of the action of steam in the steam cylinder of an engine, and the first form of indicator was the result of his efforts in that direction. The figure shows an improved form of Watt's indicator, by which a complete diagram could be traced out.

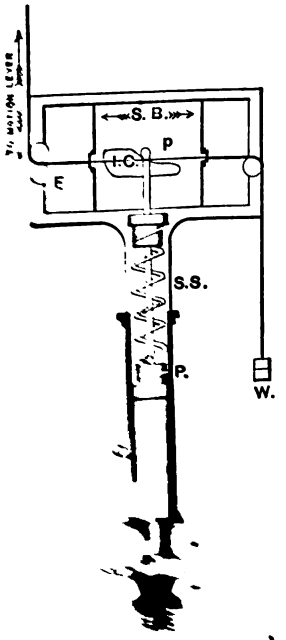

It consists essentially of a steam cylinder, C, about 1″ diameter and 6″ long, having a solid piston, P, accurately fitted into it. The cylinder is open at the top, and is fitted with a steam cock, S C, at the bottom, which is screwed into the

INDEX.

S C for Steam cock.
C ,, Cylinder.
P ,, Piston.
S S ,, Spiral spring.
p ,, Pencil.
F ,, Frame (wood).
S B ,, Sliding board (covered with paper).
I C ,, Indicator card.
W ,, Weight attached to cord for return motion of S B.

cylinder cover of the engine, or into the engine cylinder itself close to the end. A small rod is fitted into the piston at one end, and carries a pencil, *p*, at the other, which can operate on a sheet of board, S B, in front of it. The sliding r in the frame, and receives its motion fastened to some reciprocating part

Digitized by Google

of the engine, the period of whose motion is identical with that of the piston of the engine. The return of the board is effected by means of the weight, W, and the cord, while the vertical motion of the piston is controlled by a spiral spring, S S.

When the instrument was first brought into use by Watt, the pencil moved in front of a graduated scale, but no lateral motion was given to the paper, hence, all the information obtainable was the pressure of the steam in the cylinder, or the perfection of the vacuum. The addition of the sliding board, however, enables a complete diagram to be set out, and the steam pressure and vacuum ascertained *at any point of the stroke*. The importance of this improvement will be at once apparent.

Richard's Indicator.—The indicator in most general use up to 100 revolutions per minute is Richard's indicator.

The figure on this page is a section of the cylinder, C, which is made of brass, and one-half square inch in sectional area. It is closed on the top by a cover which forms a guide for the piston rod, P R. The spiral spring, S S, is fixed to the cover and to the piston, and a complete set of these springs, suitable for working at different pressures,

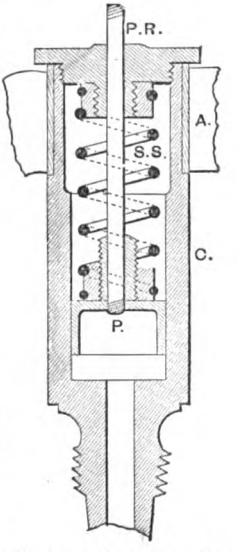

INDEX.

P R	,,	Piston rod.
S S	,,	Spiral spring.
P	,,	Piston.
A	,,	Arm.

is usually supplied with the instrument. The special feature of this indicator is the small movement of the piston, which acting through the parallel motion produces a diagram quite as large as in the older forms of indicator.

When the piston of an indicator has a long travel, the motion of the pencil becomes jerky and irregular; on the sudden admission of steam the pencil rises too high, and on the opening to exhaust it falls too low, and the whole diagram appears irregular and jagged. This defect is remedied in Richard's indicator by using a strong spring decreasing the travel of the piston. The arm which carries and the parallel motion is capable of rotating round the cylinder as an axis, so that the pencil may be removed from the drum, D, and the tracing of the diagram stopped at any point. The indicator card is wrapped round the drum and made fast

Digitized by Google

the two clips shown in the figure. The drum is rotated by means of the string, S, and the return is effected by a spring fixed inside the drum, as seen in the figure on last page.

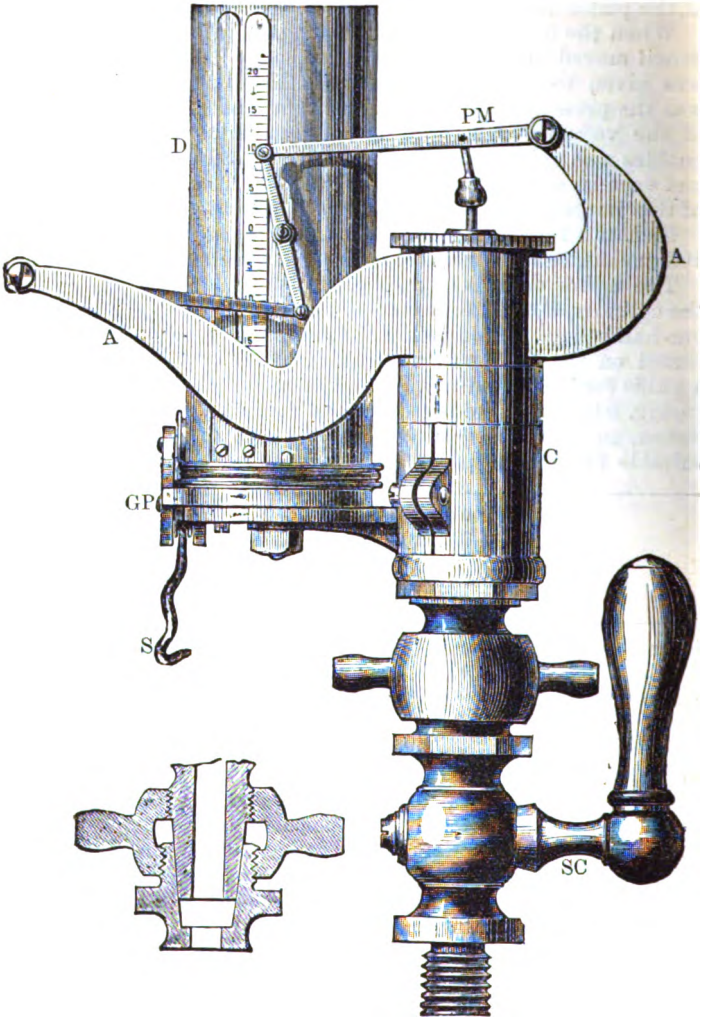

RICHARD'S INDICATOR FOR SLOW SPEED ENGINES.
(See Indexes to figures on la[illegible]next page.)

Digitized by Google

INDEX.

C for Cylinder.
S C ,, Steam cock.
P M ,, Parallel motion.
A ,, Arm capable of turning round C.
D ,, Drum for carrying paper.
G P ,, Guide pulleys for motion cord or wire.

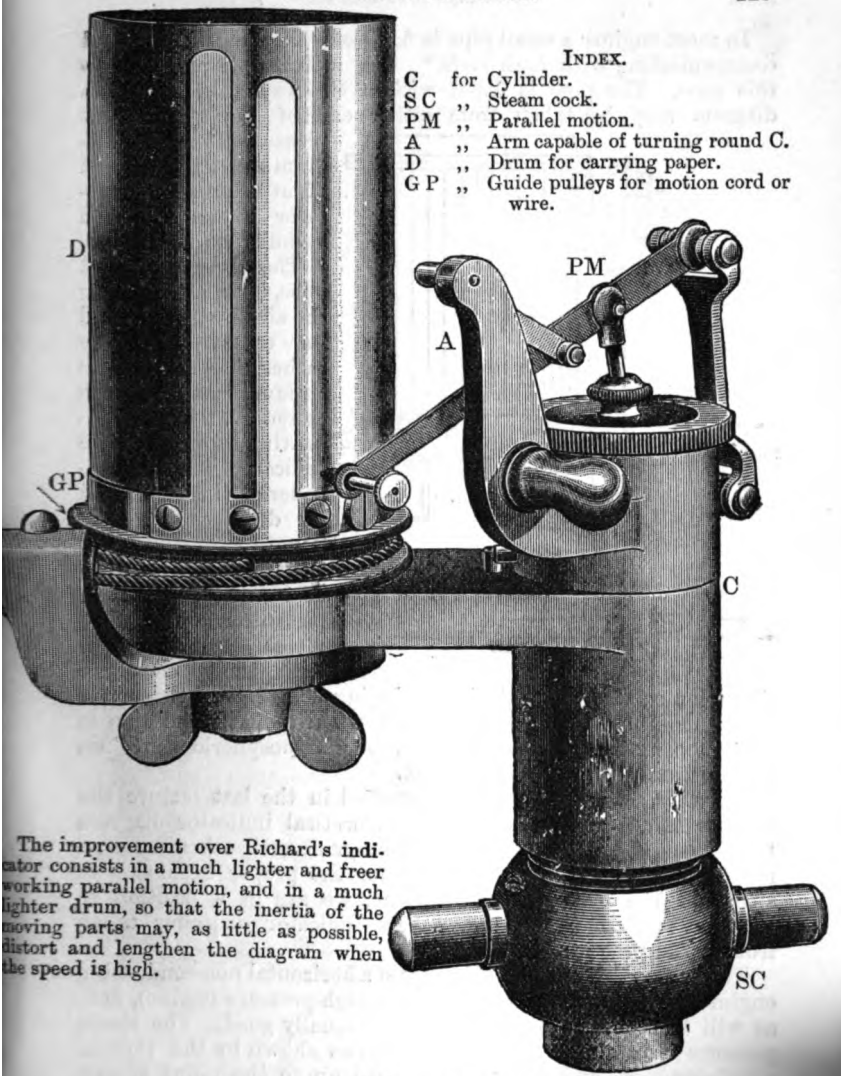

The improvement over Richard's indicator consists in a much lighter and freer working parallel motion, and in a much lighter drum, so that the inertia of the moving parts may, as little as possible, distort and lengthen the diagram when the speed is high.

THOMPSON'S INDICATOR BY MESSRS. SCHAFFER & BUDENBERG.
FOR SPEEDS UP TO 160 REVOLUTIONS PER MINUTE.

For two important papers and discussion on "The Steam Engine Indicator," see *Proc. Inst. C.E.*, vol. lxxxiii., by Prof. O. Reynolds and Mr. Brightmore, issued March, 1886, also "The Steam Engine Indicator," by Beaumont, in *The Electrician* Series.

Digitized by Google

In most engines a small pipe is fixed outside the cylinders and communicating with both ends.* The indicator is attached to this pipe. The pipe is fitted with a two-way cock, so that a diagram may be taken from either end of the cylinder at pleasure. The diagram shows the method of attaching the indicator to an inverted cylinder marine engine.

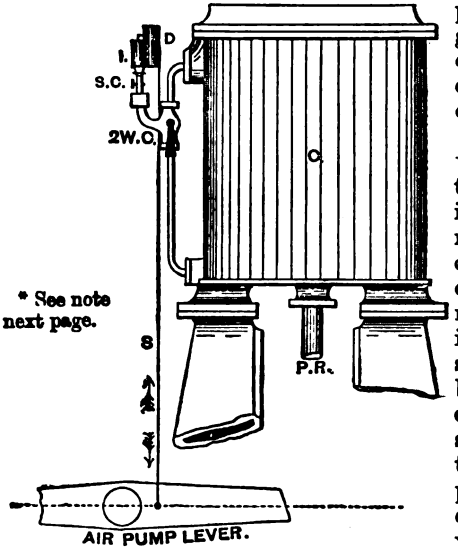

The string or steel wire, S, is attached to the air-pump lever, and its travel must be rather less than the circumference of the drum, D. Before admitting steam into the indicator the "atmospheric line" should be drawn. This is done by turning the steam cock, S C, so that the indicator piston is put into direct communication with the atmosphere through a small hole, and then bringing the arm which carries the pencil up to the rotating *drum* when a horizontal line is drawn. This line is marked A L, for "Atmospheric Line," on the diagrams throughout this book.

* See note next page.

Indicator Diagrams.—Having studied in the last lecture the various effects produced on the theoretical indicator diagram by clearance, lead, compression, release, and such other arrangements as are required in practice for the proper expansion of steam in the cylinder of an engine, we are in a position to examine and comment upon a few indicator diagrams taken from actual practice.

The annexed diagram is taken from a horizontal non-condensing engine (sometimes wrongly termed a high-pressure engine), and, as will be seen, the diagram is exceptionally good. The steam pressure rises almost instantaneously, as shown by the vertical admission line, and is well sustained up to the point of cut-off, the line P C O being perfectly horizontal. At the point of cut-off, C O, a very slight wire-drawing may be seen by the rounded corner, but it is very inappreciable and testifies to the

Digitized by Google

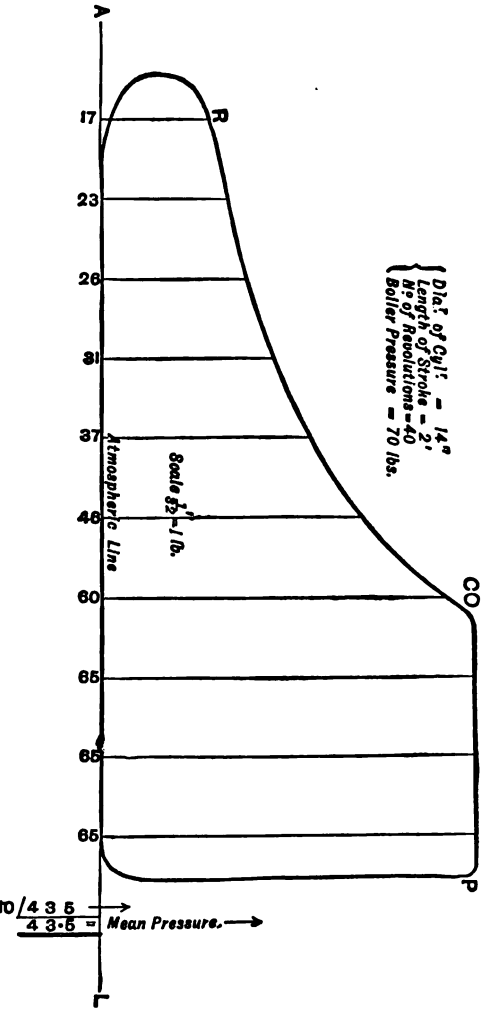

INDICATOR DIAGRAM, FULL SIZE.

This diagram was taken by the author from the Clyde Trust pumping engines working their Armstrong Hydraulic System at the Queen's Dock, Glasgow.

NOTE.—The plan of attaching the Indicator to both ends of a cylinder, as shown in the figure on last page, although convenient from a mechanical point of view, is not advisable in the case of long cylinders, or where the pipes are exposed to the cooling action of draughts. To obtain accurate diagrams, the Indicator should be attached directly to each end of the cylinder by a short large pipe, so as not to throttle or condense the steam.

efficiency of the valve gear. The release of the exhaust steam takes place at the point R, but might, with advantage, have been effected a little sooner. The exhausting of the steam is very effectually carried out, as the back pressure falls quite down to

Digitized by Google

the atmospheric line, A L. The amount of compression shown is too little, and a larger compression would no doubt make the engine work more smoothly at the dead points, for a slight knocking was observable. In this engine, however, the piston speed is very slow, viz., 160 feet per minute, so that a large amount of compression is not necessary.

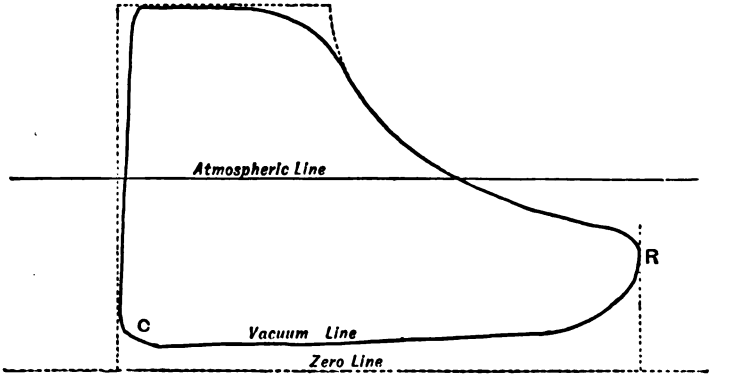

The above is an actual diagram from a condensing engine, and presents one or two defects which we shall notice briefly. First, the amount of compression is too small and the valve has not had sufficient, if any, lead. The absence of proper cushioning is shown by the very small rounded corner at the point C, and the sloping away of the admission line from the vertical shows that the valve has not been sufficiently open when the piston reached the end of its stroke. Had the valve been set to give more lead, the admission line would have coincided with the vertical dotted line, and it is evident that the non-coincidence of these lines cannot be due to wire-drawing in the steam passages. For, when once the full pressure comes on the piston, it is fully sustained (as shown by the horizontal steam line) until the valve approaches the point of cut-off, when the usual wire-drawing takes place, due to the slow motion of the slide valve, and is clearly shown by the rounded corner on the diagram. Since this diagram is taken from a condensing engine the steam exhausts into a condenser, and the back pressure or vacuum line falls far below the atmospheric line, A L, but release has been given rather late as shown at R.

Compound Engine Diagrams.—Diagrams from the cylinders of a compound engine should all be taken at the same time, so that

Digitized by Google

the conditions of boiler pressure, cut-off, &c., under which each diagram is taken, may be the same. Since the pressure of steam in each cylinder is different, springs of different strengths are used in each indicator, and hence the diagrams of different cylinders are all to different scales. From these separate diagrams, therefore, we cannot get much information, except as regards the working of the valves and the amount of work developed by each cylinder. In order to tell accurately the extent of the loss of pressure between each cylinder, and the loss from liquefaction in the cylinders during expansion, as well as any abnormal increase of pressure at any point due to re-evaporation or steam jacketing, we require to draw all the diagrams down to the same scale, when the distribution of steam may be clearly seen.

The saturation expansion curve should be plotted out on the same sheet of diagrams, so as to show clearly the variation of the actual expansion from this curve. In combining compound engine diagrams, it is best to take the volume of steam undergoing expansion, as equal to that of one pound of steam at the given pressure, so that all diagrams shall be drawn on the same basis and may be compared with each other. If we do this, we can readily construct the saturation expansion curve from tables without any calculation or geometrical construction. A diagram of the expansion of dry saturated steam has been worked out by Prof. Rankine,* and greatly facilitates the construction of the saturation curve. In this diagram the vertical ordinate represents absolute pressures in lbs. per square inch, while the horizontal abscissa represents the volume in cubic feet of one pound of steam. By its aid—if the volume of steam undergoing expansion is one pound—we can read off the pressure corresponding to any particular volume; and, if we set off this pressure at several different points throughout the stroke, we have only to join those points in order to complete the saturation curve.

To illustrate this important point, we append the diagrams of the compound engines of H.M.S. *Boadicea*, and proceed to show how to reduce them to the same scale and draw the saturation curve. The engines have one high-pressure and two low-pressure cylinders, and the ratio of the joint capacity of the two low-pressure cylinders to the high-pressure cylinder is 3·11 : 1. The steam is cut off at ·46 of the stroke in the high-pressure cylinder, and the volume of the high-pressure cylinder is 116·26 cubic feet. The pressure of the steam is 80 lbs. absolute, and the clearance of each cylinder $\frac{1}{11}$ of the volume of the cylinder.

* See *The Steam Engine*, by Prof. Rankine, or his *Rules and Tables*, latest editions. Folded page at end of these books.

Digitized by Google

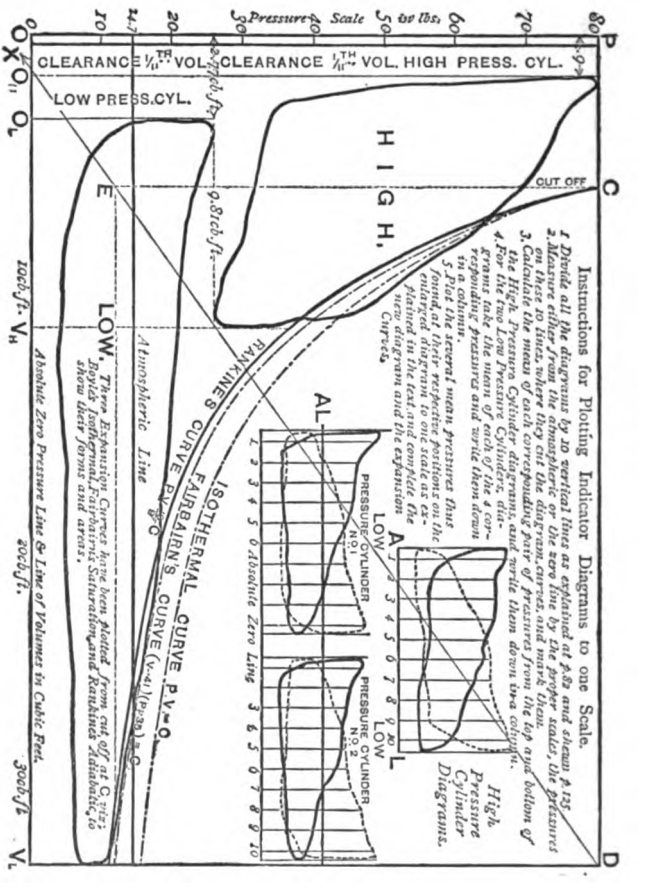

COMBINED INDICATOR DIAGRAMS—H.M.S. "BOADICEA."

Quantity of steam used in high-pressure cylr. } = volume of cylr. to pt. of cut-off + clearance.

" " " = vol. of cylr. × ·46 + $\frac{\text{vol. of cylr.}}{11}$

" " " = $116{\cdot}26 \times {\cdot}46 + \frac{116{\cdot}26}{11}$

" " " = 64·04 cubic feet.

Digitized by Google

The volume of one pound of steam at 80 lbs. pressure may be found from Rankine's diagram already referred to, or the table at page 118, to be 5·4 cubic feet.

$$\left.\begin{array}{r}\therefore \text{ Weight of steam used in high-}\\ \text{pressure cylinder in each stroke}\end{array}\right\} = \frac{64\cdot04}{5\cdot4} = 11\cdot85 \text{ lbs.}$$

$$\left.\begin{array}{r}\therefore \text{ Volume of high-pressure cylr.}\\ \text{per lb. of steam (without clearance)}\end{array}\right\} = \frac{116\cdot26}{11\cdot85} = 9\cdot81 \text{ cubic ft.}$$

$$\left.\begin{array}{r}\text{Clearance of high-pressure cylr.}\\ \text{per lb. of steam used}\end{array}\right\} = \frac{9\cdot81}{11} = \cdot9 \text{ cubic ft. nearly.}$$

$$\left.\begin{array}{r}\text{Volume of low-pressure cylr. per}\\ \text{lb. of steam (without clearance)}\end{array}\right\} = 9\cdot81 \times 3\cdot11 = 30\cdot5 \text{ cubic ft.}$$

$$\left.\begin{array}{r}\text{Clearance of low-pressure cylr.}\\ \text{per lb. of steam used}\end{array}\right\} = \frac{30\cdot5}{11} = 2\cdot77 \text{ cubic ft.}$$

We are now in a position to construct the diagram. Lay off to scale the line, $O V_L$, equal to the volume of the low-pressure cylinder per lb. of steam + its clearance = 30·5 + 2·77 = 33·27 cubic feet, and draw the vertical line, O P, to represent to scale the initial pressure of 80 lbs. per square inch. Measure off $O O_H$ = ·9 cubic feet, and draw a vertical line through O_H; this represents the clearance of the high-pressure cylinder. Now, make $O_H V_H$ = the volume of the high-pressure cylinder per lb. of steam, and divide this space into 10 parts, to correspond exactly with the divisions on the actual indicator diagram. Lay off on these divisions the mean pressures shown by the indicator diagrams, and complete the diagram of the high-pressure cylinder. The diagram of the low-pressure cylinder is reduced in the same way. $O O_L$, represents the clearance, and $O_L V_L$, the volume of the cylinder per lb. of steam, and in measuring pressures the mean of the 4 low-pressure cylinder indicator diagrams is taken.

The construction of the saturation curve from Rankine's diagram or from the table on page 118, is extremely simple, since we are dealing with one pound of steam, and the pressure corresponding to any particular volume may be set down at once.

Having now completed our diagram, we have a clear insight into the actual working of the steam in the cylinders of the engine. Evidently a large amount of wire-drawing takes place in the high-pressure cylinder, as is shown by the great fall of pressure before the point of cut-off. The rise of pressure above the saturation curve which takes place during expansion, may partly be accounted for by the action of the steam jacket in re-evaporating

Digitized by Google

moisture in the cylinder, or by the steam which condensed on admission re-evaporating due to getting heat from the cylinder liner and the piston, &c.* The loss of pressure between the two cylinders is from 5 to 8 lbs., and is rather more than we usually find in well-designed engines. Wire-drawing also takes place in the low-pressure cylinder, although not to such a great extent as in the high-pressure cylinder.

Where sufficient data cannot be obtained to reduce the volume of the saturation curve to that of one pound of steam, the diagrams may be drawn to the same scale, and the saturation curve drawn from the point of cut-off, C, by a simple geometrical construction. This is founded on the formula of Fairbairn and Tate for the expansion of saturated steam given in the last lecture, viz. :—

$$(v - \cdot 41)(p + \cdot 35) = \text{constant.}$$

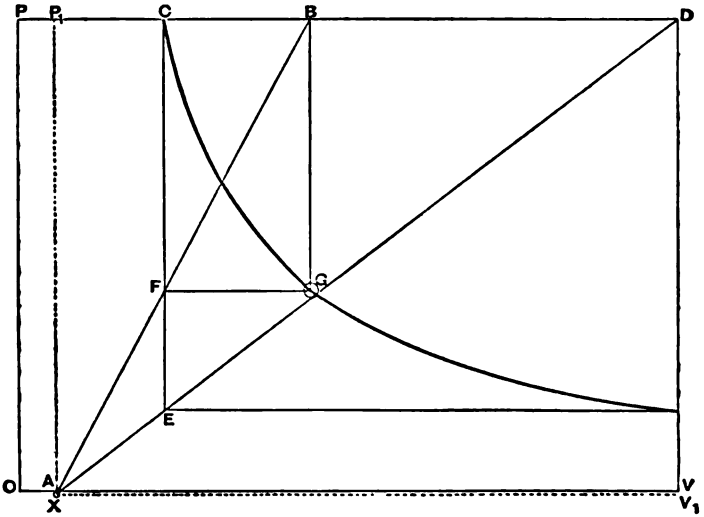

The diagram shows how this may be done. Lay off O A on the line of volumes equal to ·41 cubic foot, and from A measure A X off below O V = ·35 of a pound pressure, and draw new axes of pressure, and volume X P_1 and X V_1, and on these axes describe an hyperbola. The hyperbola considered

* Steam when passed through contracted and tortuous passages, so as to be reduced in pressure or "wire-drawn," becomes more or less superheated by the friction of its molecules, heat being the direct result of the work spent on friction. This may also account for some of the rise. See *The Electrician*, January 7th, 1887, Review of this book.

Digitized by Google

relatively to the old axes will be the curve of saturated steam, and, although, it does not coincide *exactly* with Rankine's curve, it is sufficiently near for all practical purposes. To find points on the hyperbolic curve the following construction is the simplest:—Take any point, B, between C and D, and join it with X. Where B X cuts the vertical line, C E (through the point of cut-off, C), draw a horizontal line, F G, cutting the perpendicular let fall from B to G, then G is a point on the curve. By finding a number of points in this way the whole saturation curve may be constructed, as in the Fig., p. 130.

Rankine's curves (see pp. 106, 107), $p v^{\frac{17}{16}}$, or $p v^{\frac{10}{9}} = a$ constant, c, may be easily plotted by first multiplying the initial

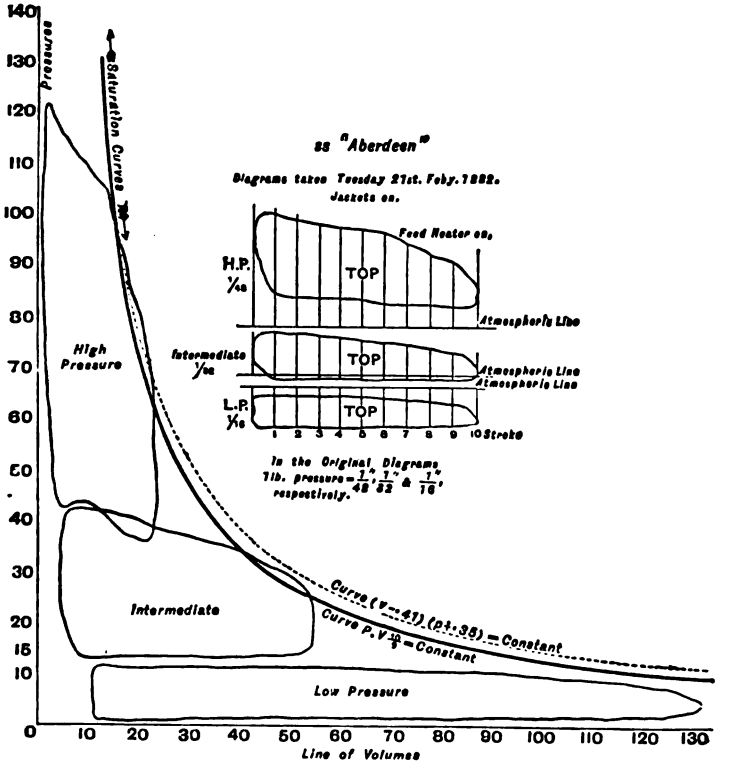

See Index at end for folding page containing combined indicator diagrams of the triple-expansion engines of S.S. "*Arabian.*"

Digitized by Google

pressure by its volume to point of cut-off taken as = 1, which gives us the constant, c, and then finding by aid of a table of common logarithms, the pressure corresponding to any other volume, v, throughout the stroke, thus:—

$$p v^{\frac{10}{9}} = c, \text{ or } \frac{c}{v^{\frac{10}{9}}} = p. \qquad \therefore \log. c - \left(\frac{\log. v \times 10}{9}\right) = \log. p.$$

From which we get the value of p, at any part of the stroke, and mark it off on the vertical ordinate at the volume, v, for which it was calculated. In this way, the curve $p v^{\frac{10}{9}} = a$ constant, in the Fig. on the last page was calculated and plotted.

We pointed out in a former Lecture, that the principal advantage of compound over simple expansive engines, is that the cylinders are not subjected to such great variation of temperature, and, therefore, the loss from liquefaction in the cylinders is less. With steam pressure of from 60 to 100 lbs. in compound engines, the expansion is carried out in two cylinders only, but when that pressure is exceeded, the difference of the initial and final temperatures of the steam in each cylinder becomes so great, that three or more cylinders are required to expand the steam efficiently. The diagrams from the engines of the S.S. "*Aberdeen*," designed by Mr. A. C. Kirk, of Messrs. Robert Napier & Sons (which were among the first triple expansive engines constructed), are shown on the previous page drawn to the same scale. These diagrams show that there is very little loss of pressure between the cylinders, and fit in very well with the expansion curve $P V^{\frac{10}{9}}$. Very little re-evaporation takes place since the range of temperature in each cylinder is small.*

* The S.S. "*Aberdeen*" is an iron ship, built in 1881 for Messrs. George Thompson & Coy.'s London-Australian trade, by Messrs. Robert Napier & Sons, Glasgow, to the highest class at Lloyds—350 ft. by 44 ft. by 33 ft. The engines were supplied with steam at 125 lbs. pressure from two ordinary double-ended boilers, with no superheater, constructed entirely of steel, with six of Fox's corrugated furnaces in each, the total heating surface being 7,128 square ft. The cylinders were three in number, being 30 in., 45 in., and 70 in. diameter respectively, by 4 ft. 6 in. stroke. The high-pressure cylinder was not steam jacketed, the second was steam jacketed, with steam of 50 lbs. pressure; and the low-pressure one with steam of 15 lbs. above the atmosphere. On the official trial 2,000 tons of dead weight were put on board, and a test made for the consumption of coal on a six hours' run at 1,800 I.H.P. The result was a consumption of 1·28 lbs. of Penrikyber Welsh coal per indicated horse-power.

See *The Proceedings of the Institution of Naval Architects*, 1882, for Mr. Kirk's paper "On the Triple Expansion Engines of the S.S. '*Aberdeen*,'" and for a paper "On the Economy of Compound Engines," by W. Parker Chief Engineer of Lloyd's Register, with discussions thereon.

Digitized by Google

LECTURE XV.—QUESTIONS.

1. Sketch and describe Richard's indicator, showing how it is applied in obtaining the mean pressure in a steam cylinder.

2. Draw the normal indicator diagram of a condensing engine, and trace the changes in outline produced by the principal causes which may, in practice, detract from the efficiency of the engine.

3. Draw indicator diagrams as commonly given in a double-acting engine, (1) of the condensing type, (2) when non-condensing.

4. Draw the ordinary indicator diagrams as obtained (1) from the top, (2) from the bottom of the cylinder of a single-acting condensing engine, and account for the difference in form of the respective diagrams.

5. How is the effects of wire-drawing and of clearance shown on an indicator diagram?

6. Show by sketches and also explain the effect on an indicator diagram of—(1) a leaky piston; (2) contracted steam passages; (3) a leaky condenser; (4) deficiency of lap in the slide valve; (5) deficiency of lead. (*Adv. S. and A. Exam.*, 1889.)

7. What is the object of a steam jacket? In what way does the absence of the jacket affect the indicator diagram?

8. Explain the operation of combining the indicator diagrams of work done in a compound cylinder engine, the object being to produce the diagram which would have been obtained if the steam had performed the same work by going through the same changes of pressure and volume in one cylinder.

9. A non-condensing engine is using steam at 42 lbs. per square inch above the atmosphere—the length of the stroke is 3 feet, and steam is cut off at $\frac{1}{3}$ stroke—draw an approximate diagram (scale $\frac{1}{12}$) marking points of release and compression, and showing the direction of motion of the piston by arrows. Find, by calculation, the mean pressure. *Ans.* 24·9 lbs.

10. Describe, with such sketches as you think necessary, the operation of taking an indicator diagram from a horizontal engine, saying how you would connect the apparatus with some moving part keeping time with piston. Make a diagram, showing the relative positions of the crank pin and centre of the eccentric pulley at the time, (1) when steam enters the cylinder, (2) when it is cut off, (3) when compression begins. In what manner are the width of the port, the lap of the valve, and the throw of the eccentric related together?

11. In taking an indicator figure in a quick running engine, what modification would you make in the instrument in order to get a clearly defined and accurate figure?

12. Explain the difference between a non-condensing engine and a condensing engine. Show by a diagram that more work is obtained from a given quantity of steam in the latter class of engines.

13. Explain fully how the net work done in one stroke by steam or any gas expanding behind a cylinder piston is represented to scale by the area of the indicator diagram figure. See Lectures XI. and XVI.

14. Draw a theoretical indicator diagram for a condensing engine working expansively, and mark the scale on your diagram for an engine of 30 inches stroke supplied with steam at 30 lbs. absolute pressure, cut off at two-thirds of the stroke, and working with a vacuum of 12 lbs. Point out the assumptions which are made in drawing the theoretical diagram, and mark in dotted lines the actual diagram which you would expect to obtain if the engine were in good working order. (*Adv. S. and A. Exam.*, 1887.)

Digitized by Google

LECTURE XVI.

CONTENTS.—Nominal and Indicated Horse-Power—Rule for finding the Indicated Horse-Power of an Engine—Formula for finding the Mean Pressure—Brake Horse-Power, and how to find it by Absorption and Transmission Dynamometers with examples.

Horse-Power.—The unit of power which is universally adopted by mechanical engineers in this country is that which was proposed and used by Watt—viz., *the horse-power*.

The steam engines introduced by Watt, were employed to a large extent in doing work which had formerly been done by horses, and hence it became necessary for him to be able to state the number of horses to which his engine would be equivalent in power. Watt estimated the power of the strongest London horses as about equal to that required to raise 33,000 *lbs. one foot high in one minute*, and he adopted this as his standard of power. This estimate, however, is too large, the average power of a horse being only about 22,000 foot-pounds* per minute, but Watt seems to have been desirous that his engines should exceed, rather than fall short of, their nominal power.

What is, therefore, technically spoken of among engineers as a *horse-power*, is the rate of doing work corresponding to 33,000 foot-pounds per minute, and the power of steam engines is always calculated on this basis.

Watt found that in his engines, he usually obtained a mean pressure of about 7 lbs. per square inch in the cylinder, and he estimated the power of his engines by assuming that value for the mean pressure. The horse-power thus estimated, he termed the *nominal* horse-power, and in practice that power was actually obtained. When, however, increased steam pressures came into general use, the mean pressure of steam in the cylinders could no longer be correctly taken as 7 lbs., and the nominal horse-power differed largely from the actual horse-power. In commerce the term nominal horse-power had been so much used, that commercial men understood the size, and, therefore the value, of an engine much better when its nominal horse-power was spoken of than its actual power, and, therefore, the term

* The foot-pound is the unit of work, and is the work done by a force of one pound acting through the space of one foot.

Digitized by Google

was retained for a long time, and even yet is still used for some classes of engines, such as those used for agricultural purposes. However, as unfair competition often takes place between different manufacturers, owing to the use of this term, it is fast falling into disuse and should be altogether abandoned.

The actual power exerted in the cylinder of an engine, cannot be obtained until we know the actual mean pressure of steam in the cylinder. In order to ascertain this, we must take a diagram from the cylinder by means of the indicator which was described in the last Lecture. The horse-power obtained by this means is termed the *indicated* horse-power, and when the horse-power of engines is spoken of, it is the indicated horse-power (I.H.P.) which is understood unless otherwise stated.

The diagram at p. 127 is taken from a horizontal non-condensing engine, and from it we wish to find the mean pressure of steam in the cylinder. To do this, divide the diagram into ten equal parts, by aid of the parallel ruler accompanying the indicator, then read off the pressures at the *centre* of each space or division, as described at p. 84, and shown by the vertical lines in Fig. p. 127, by means of the scale corresponding to the indicator spring. The sum of these pressures divided by 10 gives the mean pressure during one stroke. This is shown worked out on the diagram, the mean pressure in this case being 43·5 lbs. per square inch. Now the work in foot-pounds done by an engine in one minute is = total mean pressure on the piston in lbs. × distance in feet travelled by piston in one minute. But one horse-power is equal to 33,000 foot-pounds per minute.

Therefore, the horse-power exerted by an engine is = *total mean pressure on the piston in lbs.* × *distance in feet travelled by the piston in one minute* ÷ 33,000.

Let p denote the mean pressure of steam in lbs. per square inch.
„ A „ the area of the cylinder in square inches.*
„ L „ the length of the stroke in feet.
„ N „ the number of strokes per minute = revolutions × 2.
„ H P „ the horse-power.

Then, total mean pressure on the piston in lbs. = $A\,p$,
also, distance in feet travelled by piston in one minute = $L\,N$.

$$\therefore \text{ the horse-power of the engine } = \frac{A\,p\,L\,N}{33{,}000}.$$

This formula is easily remembered, since it may be written so as to form the word "PLAN," *thus:—Horse-power* = PLAN ÷ 33,000.

* In all cases, the area of the piston-rod has to be taken into account. For example, where the piston-rod comes out at the crank end of the cylinder only, then, A, *should be total area of cylinder less half the area of the piston-rod.*

Digitized by Google

Applying our formula to find the horse-power of the engine from the diagram and data given in it, we get

$$\text{H P} = \frac{\text{A}\,p\,\text{L}\,\text{N}}{33{,}000} = \frac{153{\cdot}9 \times 43{\cdot}5 \times 2 \times 80}{33{,}000} = 32{\cdot}45.$$

The diagram only gives the mean pressure on one side of the piston; but in practice it is usual to take the mean of two diagrams—one taken from each end of the cylinder. If there be two or more cylinders, the power developed in each has to be added together, in order to obtain the total horse-power.

If the student refers to questions 16, 17, 18, and 19 at the end of this Lecture, he will observe that he is given in each case the pressure of the steam on admission to the cylinder, the position of cut-off, *and the hyperbolic or napierian logarithm of the ratio of expansion*, as well as the diameter or the area of the cylinder, and the length of the stroke; from which, he is expected to calculate the net or effective work done in one stroke, or else the indicated horse-power when the number of revolutions per minute is stated. Now, as this is a very common form of question set in examination papers, and as the solution thereof will aid us in still further explaining (what has already been referred to at the end of Lecture XI.), that the area of the calculated or of the actual indicator diagram is a measure of the work done in one stroke, we shall first of all show how the hyperbolic logarithm is to be applied, in order to ascertain the mean total pressure throughout the stroke, *on the assumption that the steam expands according to Boyle's Law, neglecting clearance;* and secondly, we shall take into account the effect of clearance.

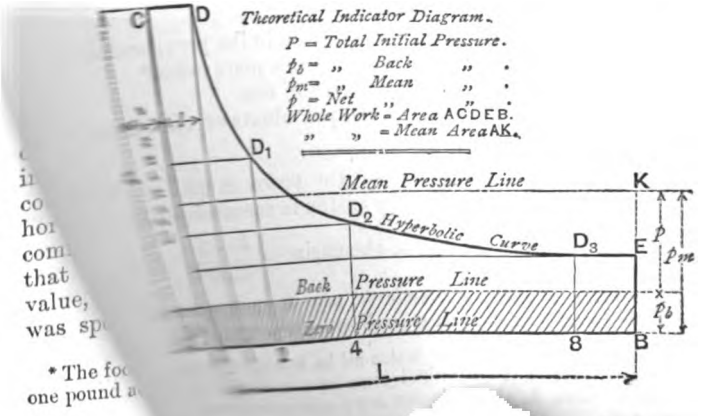

Digitized by Google

Referring to the last theoretical indicator diagram, A C D E B, the area of the rectangle, A D, is the product of the pressure line, A C, and the volume line, C D, or, A 1, to the point of cut-off, and therefore this area, A D, expresses the *whole* work done upon the piston by the steam in entering and in occupying that part of the cylinder before cut-off takes place; further, since the steam is supposed to expand in accordance with Boyle's Law ($p\,v$ = a constant), the curved line, D E, is a hyperbolic or isothermal curve, and the hyperbolic area, 1 D E B, expresses the *whole* work done by the steam during expansion—*i.e.*, after cut-off takes place. This latter area, 1 D E B, and consequently the *whole* work done during expansion, may be calculated by taking advantage of the known relations of hyperbolic curve areas to their base lines.*

For, if the base lines

A 1, A 2, A 4, A 8, &c.,

increase in the following geometrical progression,

as 1, to 2, to 4, to 8, to &c.,

then the successive areas,

— $1\,D_1$, $1\,D_2$, $1\,D_3$, &c.,

increase in the following arithmetical progression,

as — to 1, to 2, to 3, to &c.

For example:—

Let the area or volume, A D, up to the point of cut-off, be expressed by, 1, and the areas or volumes due to the expansion of the steam by the following numbers in geometrical progression:—

1, to 2, to 4, to 8, to &c.

* On the principle of logarithms, which represent in arithmetical progression natural numbers in geometrical progression, tables of hyperbolic logarithms are compiled to facilitate the calculation of the areas of work done due to various degrees of expansion. The hyperbolic logarithms are specially indicated or distinguished from common logarithms in formulæ by the small Greek letter ϵ, thus $\log.\epsilon$, and a few of these hyperbolic logarithms have been selected and printed at p. 145, in order to enable students to work any of the ordinary questions. Hyperbolic numbers consist of the multiples of common logarithms by 2·302585, which, thus modified, become direct expressions of the actual ratio of the *whole* work done during exp[illegible] sion (due to different degrees of expansion) to the *whole* work done b[illegible] steam before expansion takes place.

Digitized by Google

The hyperbolic logarithms of these numbers are (see table, p. 145)

·000, ·693, 1·386, 2·079, &c.,

being as 0, to 1, to 2, to 3, to &c.,

or in arithmetical progression; therefore, the *whole* work done by a quantity of steam expanded successively from the initial volume, 1,

being as 1, to 2, to 4, to 8, to &c.,

will be in the proportions of

1, to 1 + ·693 to 1 + 1·386 to 1 + 2·079 to &c.,

or as 1, to 1·693 to 2·386 to 3·079 to &c.

Or generally if, r, be the ratio of expansion the whole work done will be as $(1 + \log._e r)$, showing that for an expansion of eight times, the initial work done by the steam before cut-off takes place, is tripled for that number of expansions by the end of the stroke. It is necessary, however, to deduct the work spent against the back pressure (due to an imperfect vacuum reckoned from the absolute zero or perfect vacuum line), before we obtain the net or effective work done by the steam in one stroke.

Another method of reasoning out the foregoing principle is as follows (see last figure):—

Let P = the initial pressure of steam in lbs. on the square inch at the cylinder, reckoned from absolute zero or perfect vacuum line, or = A C.

p_m = the mean pressure in lbs. on the square inch throughout the stroke, also reckoned from absolute zero.

A = area of cylinder in square inches.

L = whole stroke, A B, in feet.

l = distance in feet to point of cut-off, or C D.

$\frac{L}{l} = r$ = ratio of expansion, neglecting clearance.

x = any distance from commencement of stroke between the limits, $x = l$ and $x = L$.

Then the whole work done through distance, l = A P l, foot-lbs.

Pressure of steam at any point, $x = \frac{A P l}{x}$.

Digitized by Google

$\therefore$ The work done through any very small space $dx = \frac{APl}{x}\,dx$.

The whole work done during expansion—*i.e.*, from point of cut-off to the end of the stroke, or from where $x = l$ to where $x = L$ is.

By integral calculus,

$$= APl\int\frac{dx}{x} = APl\log_{\epsilon}\frac{L}{l} = APl\log_{\epsilon}r, \text{ foot-lbs.}$$

$\therefore$ The whole work done during one stroke,

$$= APl + APl\log_{\epsilon}r = APl(1 + \log_{\epsilon}r).$$

And the total horse-power, if N = number of strokes per minute,

$$= \frac{APlN(1 + \log_{\epsilon}r)}{33000},$$

The total forward mean pressure, p_m, indicated by the vertical height, p_m, is therefore found by dividing the above whole work done during one stroke by the area, A, and by the length of the stroke, L,

$$\text{or } p_m = \frac{APl}{AL}(1 + \log_{\epsilon}r) = \frac{Pl}{L}(1 + \log_{\epsilon}r) = \frac{P}{r}(1 + \log_{\epsilon}r).$$

And if p_b = the mean back pressure indicated by the vertical height, p_b, in the last figure, or by the shaded portion above the line, A B; and p, = the net or effective mean pressure throughout the stroke, then—

$$p = p_m - p_b = \frac{P}{r}(1 + \log_{\epsilon}r) - p_b \text{ lbs. on the square inch.}$$

And the Net or Effective Horse-power

$$= ALN\frac{\left\{\frac{P}{r}(1 + \log_{\epsilon}r) - p_b\right\}}{33000}$$

These formulæ take no account of the wiredrawing of the steam between the boiler and the engine, or in the steam ports, neither have the effects of clearance, compression, &c., been taken into account. They must not therefore be used in determini

Digitized by Google

the size of any particular engine, because large allowances have sometimes to be made for these effects in actual practice; but as they are sufficient to solve most of the ordinary questions set in examination papers, we shall apply them to three examples in order to impress them on the student's memory, and thus lead up to the final formula.

1st. Take the case of p. 81, Watt's diagram of work. Here P = 1 atmosphere, or say 15 lbs. absolute, for Watt at the time of his devising his diagram of work only used steam of atmospheric pressure, and thus all work was done in his engines at that time, solely by means of the vacuum. The ratio of expansion, $r = 5$, since steam was cut off at $\frac{1}{5}$ of the stroke, and he took no account of back pressure, thus supposing the vacuum to be perfect—

The mean pressure,

$$p_m = \frac{P}{r}(1 + \log_e r) = \frac{15}{5}(1 + 1{\cdot}609). \quad \text{See p. 145 for logs.}$$

$$= 3 \times 2{\cdot}609 = 7{\cdot}827 \text{ lbs., or } {\cdot}52 \text{ of an atmosphere,}$$

which corresponds with that found by Simpson's or ordinary rule (see p. 83).

2nd. Take the case at p. 83, where the pressure of steam may also be supposed to be that above a perfect vacuum and no back pressure was mentioned.

P = 100 lbs. absolute, $r = 4$, as steam was cut off at $\frac{1}{4}$ stroke;

∴ mean pressure,

$$p_m = \frac{P}{r}(1 + \log_e r) = \frac{100}{4}(1 + 1{\cdot}386)$$

$$= 25 + 2{\cdot}386 = 59{\cdot}65 \text{ lbs.},$$

As against 59·7 lbs. found at p. 83, and 59·9 at p. 84.

3rd. Let us see what we might have expected the mean forward pressure to be in the case of the non-condensing Armstrong engine, whose indicator diagram is shown at p. 127, and calculated horse-power at pp. 137, 138, supposing the boiler pressure to be known, as well as the back pressure, and neglecting clearance. The pressure at the boiler is marked 70 lbs.—*i.e.*, above the atmosphere, or adding the pressure of the atmosphere 15 lbs. we have P = 70 + 15 = 85 lbs. The cut-off is at nearly $\frac{1}{3}$ stroke, or $r = 3$, and the back pressure is just 15 lbs., as the exhaust line coincides exactly with the atmospheric line. It is not usual, however, for the exhaust to be so free as this in such engines.

Digitized by Google

The mean net or effective pressure is—

$$p = \frac{P}{r}(1 + \log_{\epsilon} r) - p_b = \frac{85}{3}(1 + 1{\cdot}0986) - 15$$

$$= 28{\cdot}\dot{3} \times 2{\cdot}0986 - 15 = 59{\cdot}45 - 15 = 44{\cdot}45 \text{ lbs.}$$

As against 43·5 lbs. marked on the indicator diagram at p. 127.

We must now take the effect of clearance into account, in order to get a more perfect estimate of the probable mean pressure in any case we may have to deal with in practice.

If the student refers back to p. 110, he will see that the ratio of expansion, r, as treated above, becomes r_1 when we take clearance into account, and that

$$r_1 = \frac{r(1 + c)}{1 + c\,r}$$

Where, c, the clearance, is considered as the fraction of the whole volume of the cylinder to the point of cut-off. It will, however, be more convenient here to consider, c, as an addition to the length of the cylinder, the area of this supposed clearance-length, c, being equal to that of the cylinder, = A, so that $c \times A$ = volume of clearance,* and therefore the true ratio of expansion becomes

$$\frac{L + c}{l + c} = \frac{\text{length of stroke + clearance.}}{\text{length to cut-off + clearance.}}$$

The clearance is shown in the last figure by the distance, c.

* It is not possible to estimate exactly the volume of the clearance in a completed or working engine, unless the valve casing cover be taken off, the piston brought first to one end of the cylinder, and the volume of water required to just fill the clearance spaces at the end between the piston and right up to the valve face be measured, and then the same operation performed for the other end of cylinder. Of course, it may be calculated approximately from the drawings of the engine, or allowed for in calculations previous to making the drawings. This volume of the combined clearance spaces, at one end or the other, is then considered as a fraction or percentage of the whole volume of the piston's stroke, or it may be regarded as equivalent to a fraction, c, of the stroke, L. For if, A, be the sectional area of the cylinder in square feet, then $A \times L$ = volume of the cylinder's stroke in cubic feet, and $A \times c$ = volume of clearance spaces also in cubic feet.

Hence $A(L + c)$ = whole volume of cylinder, including clearance,
and $A(l + c)$ = whole volume to point of cut-off, including clearance.

Therefore, the actual ratio of expansion,

$$= \frac{A(L + c)}{A(l + c)} = \frac{L + c}{l + c} \text{ the expression used above.}$$

Digitized by Google

Now, reasoning as before—
The *whole* work done to the point of cut-off = A P l.
The *whole* work done during expansion

$$= \mathrm{A\,P}\left\{(l + c)\left(\log_{\cdot}\frac{\mathrm{L} + c}{l + c}\right)\right\}$$

The sum of these two quantities equals the whole work done during one whole stroke, and is

$$= \mathrm{A\,P}\left\{l + (l + c)\left(\log_{\cdot}\frac{\mathrm{L} + c}{l + c}\right)\right\} \text{ neglecting back pressure.}$$

The mean forward pressure during the stroke is found, by dividing this expression by the area of cylinder, A, and by the length of the stroke, L, and subtracting the mean back pressure, p_b.
Or

$$p_m - p_b = p = \frac{\mathrm{P}}{\mathrm{L}}\left\{l + (l + c)\left(\log_{\cdot}\frac{\mathrm{L} + c}{l + c}\right)\right\} - p_b$$

Applying this formula to the last example (see also pp. 127 and 138), where P = 85 lbs., being 70 lbs. boiler pressure plus 15 lbs. atmospheric pressure, L = 2 ft., $l = \frac{2}{3}$ ft. (as steam was cut off at $\frac{1}{3}$ stroke), and assuming, c, to be equivalent to $\frac{1}{10}$ of the stroke, or ·2 ft., which is a common allowance, while the back pressure, p_b = 15 lbs. (for as we noticed before the exhaust line and the atmospheric line agree), we have by substituting these known values in the last equation—

$$p = \frac{85}{2}\left\{\frac{2'}{3} + \left(\frac{2'}{3} + \cdot 2'\right)\left(\log_{\cdot}\frac{2' + \cdot 2'}{\frac{2'}{3} + \cdot 2}\right)\right\} - 15$$

$$= 42{\cdot}25\left\{\cdot\dot{6} + \cdot 8\dot{6}\,(\log_{\cdot} 2{\cdot}54)\right\} - 15$$

Note.—The nearest log. to 2·54 in the following table is that of 2·5.

$$= 42{\cdot}25\,(\cdot\dot{6} + \cdot 8\dot{6} \times {\cdot}91629) - 15 = 42{\cdot}25 \times 1{\cdot}46 - 15$$

$$= 61{\cdot}68 - 15 = 46{\cdot}68 \text{ lbs., as against } 44{\cdot}45 \text{ lbs.}$$

by our former formula when not taking clearance into account, and as against 43·5 lbs. on the indicator card. But, as we mentioned before, wire drawing, &c., reduces the pressure between

Digitized by Google

the boiler and the cylinder, and on looking at the indicator card at p. 127 we observe that the initial pressure on it is marked 65 lbs., or a fall of 5 lbs., or 13·4 per cent., between the boiler and the piston. If we take 65 as the initial pressure, then the total pressure, P, becomes 65 + 15 or 80 lbs., and substituting this value in the last formula for the 85 lbs., we get a mean cylinder pressure of 43·4 lbs., which is certainly a very close approximation to the mean cylinder pressure 43·5 lbs., as found from the actual indicator diagram by measurement. It must be admitted, however, that this indicator diagram is an exceptionally good one, and corresponds more closely in form than most engine diagrams do, to a theoretically perfect diagram.

It is therefore advisable to be cautious in trusting to this formula. It will well repay time spent to draw out to a large scale the most probable indicator diagram for any engine that we may be designing,* bringing to bear any known results for the reduction of boiler pressure due to wire drawing under similar conditions, as well as for the effects of clearance, release, and compression on the area and on the form of the diagram, so as to ascertain the mean pressure, and thereby the horse-power graphically, as well as by the formula; for actual final results as found by indicator diagrams have been known to vary 25 per cent. from the previous calculated results, when trusting merely to the formula and to the supposed boiler pressure. Of course such a result might be fairly termed a miscalculation!

The following Napierian logarithms will facilitate the calculation of mean pressures:—

HYPERBOLIC OR NAPIERIAN LOGARITHMS OF RATIOS OF EXPANSION.

No.	Logarithm.	No.	Logarithm.	No.	Logarithm.	No	Logarithm.
1	0	3·5	1·2527629	6	1·7917595	8·5	2·1400661
1·25	·2231435	3·75	1·3217559	6·25	1·8325814	8·75	2·1690536
1·5	·4054652	4	1·3862943	6·5	1·8718021	9	2·1972245
1·75	·5596157	4·25	1·4469189	6·75	1·9095425	9·25	2·2246236
2	·6931472	4·5	1·5040773	7	1·9459100	9·5	2·2512918
2·25	·8109303	4·75	1·5581446	7·25	1·9810014	9·75	2·2772673
2·5	·9162907	5	1·6094379	7·5	2·0149030	10	2·3025851
2·75	1·0116009	5·25	1·6582280	7·75	2·0476928	12	2·4849065
3	1·0986124	5·5	1·7047481	8	2·0794414	15	2·7080502
3·25	1·1786549	5·75	1·7491998	8·25	2·1102128	18	2·8903847

* The plan of plotting diagrams to one scale as explained at the end of Lecture XV., should be followed in the case of compound engines.

Digitized by Google

Brake Horse-power.—It is often advisable, more especially in the case of competitive trials of Land and Electric Light Engines, to know the actual power given out by an engine independent of the power absorbed in friction, &c., in driving the engine itself. In order to ascertain this, it is necessary either to apply an absorption or a transmission dynamometer to the fly-wheel, or to a pulley keyed on the crank or first shaft. The power so obtained, is termed the Brake Horse-Power and indicated by the letters B.H.P.

It is certainly much more satisfactory to the buyer of an engine to know definitely the B.H.P. of an engine, than either the almost obsolete N.H.P., or the now more common I.H.P., for thereby he knows exactly what power he can get from the engine at a certain speed; and it would be well, both for buyers and sellers, if this system of reckoning the power of smaller engines was always insisted upon, and a test made before acceptance.

One of the most common and easily applied Absorption Dynamometers is that known as the Prony Brake, which we now illustrate and explain by an actual example of a test made by the author.

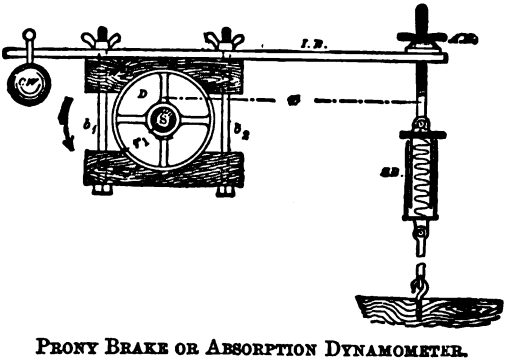

PRONY BRAKE OR ABSORPTION DYNAMOMETER.

Where W B represents Wooden blocks to fit.
D ,, Drum or pulley keyed to
S ,, Driving shaft.
b_1 b_2 ,, Iron bolts with ram's horn nuts to adjust the tightness of W B on D.
I B ,, Stiff iron bar with
S B ,, Salter's balance at one end, and
C W ,, Small counter weight to balance extra length of I B and S B on other side.
A N ,, Adjusting nut [illegible] balance.

Digitized by Google

Method of taking Test for Brake Horse-Power.

1. Adjust position of C W until it balances the weight of I B, A N, and S B, with the wooden blocks slack on pulley.

2. Start machinery and tighten blocks, W B, by ram nuts until desired speed is attained, at same time adjusting S B by nut, A N, until a balance is obtained, keeping I B level.

Note number of revolutions per minute by speed indicator and stress indicated by spring balance.

$$\text{H.P.} = \frac{2\pi r n \text{P}}{33000} \text{ horse-power developed on brake.}$$

Where r = horizontal distance from centre of balance to centre of shaft S in feet.
n = number of revolutions per minute.
P = Salter's balance reading.

$$\text{Since } \frac{2\pi}{33000} = \cdot0001904 = \text{a constant.}$$

$$\text{H.P.} = \cdot0001904 \times r \times n \times \text{P.}$$

Ex.—Test recently taken by the author of fast-speed Westinghouse engine (diameter of cylinder 7-inch, stroke 5-inch, pressure of steam 55 lbs.), with crank shaft coupled direct to an Edison dynamo.

The blocks, W B, were fixed to a fly-wheel of 2 feet diameter, which was 6 inches broad.

$$r = 2{\cdot}5 \text{ feet}; \; n = 624; \; \text{P} = 48 \text{ lbs.}$$

$$\therefore \text{H.P.} = \cdot0001904 \times r \times n \times \text{P}$$

$$\therefore \text{H.P.} = \cdot0001904 \times 2{\cdot}5 \times 624 \times 48$$

$$\therefore \text{H.P.} = 14{\cdot}26.$$

It is important to note that neither the diameter of the pulley nor the pressure of the friction blocks on the same (due to the weight of the apparatus, or the tightening of the ram nuts), nor the coefficient of friction enter into the formula for obtaining the horse-power. The only data required being the horizontal length of lever, r, the pull, P, and the number of revolutions.

For, let, p, be the pressure, and, f, the coefficient of friction between the face of the drum, D, and two brake blocks, W B, then the twisting moment, T, tending to turn the brake blocks round with the shaft is

$$\text{T} = 2pf \times r_1$$

Where r_1 is the radius of the pulley or drum, D, in

Digitized by Google

But this twisting moment is balanced by the pull on the spring balance, P, multiplied by its leverage, r.

$$\therefore 2pfr_1 = \mathrm{P}r.$$

The angle turned by the pulley or drum, D, per minute $= 2\pi n$ radians, and since the work done by a couple is the product of its moment into the angle through which the body acted on turns :—

The work absorbed by friction = The work done per minute in foot-pounds, *i.e.*,

$$2pfr_1 \times 2\pi n = \mathrm{P}r \times 2\pi n$$

$$\text{and } \therefore \text{ the H.P.} = \frac{\mathrm{P}r \times 2\pi n}{33000} = \frac{2\pi r n \mathrm{P}}{33000}.$$

It is sometimes advisable to add a dash pot to the lever, I B, in order to get steady readings of the Salter's balance or weight, P.

Another very useful and practical form of Prony Brake is that shown in the following figure :—

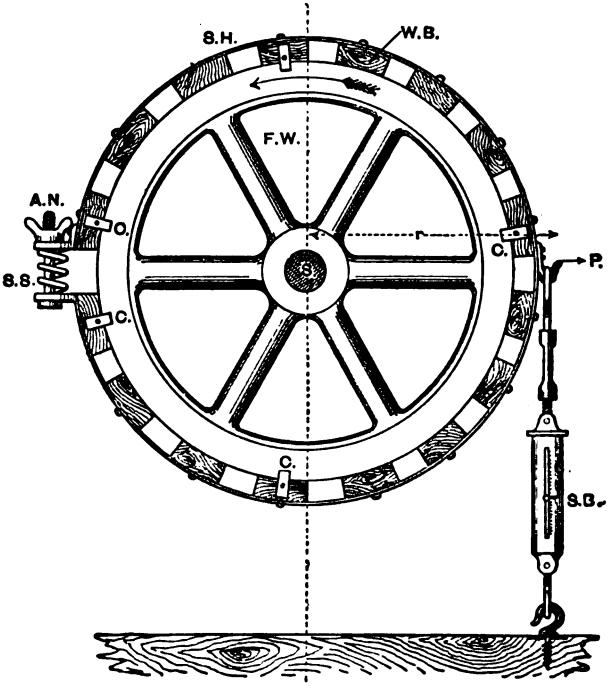

Digitized by Google

Here the balance weight and ram nuts are done away with, in favour of a steel hoop or strap, S H, to which are fitted wooden blocks, W B, with spaces, of say 2 inches or so intervening between them, surrounding the fly-wheel, F W, keyed on the crank shaft, S. Clips, C, made of iron or steel, keep this brake strap fair on the fly-wheel, and thus prevent it from sliding to one side more than another.

The engine is started with the adjusting nut, A N, and the spiral spring, S S, slack until it reaches the normal speed. The nut, A N, is now gradually tightened, the speed being kept constant and the pointer, P, level; the tension on the Salter's balance, S B, is read off and the calculation made for the B.H.P. exactly as in the former example. This form of brake is now adopted by several well-known makers; and, as the author has frequently used it in testing these engines, he can confidently recommend it in preference to the former method. Messrs. Alley & Maclellan, the makers of the Westinghouse fast-speed engine, keep the adjusting nut, A N, and spiral spring, S S, at the right-hand side, and do away with the Salter's balance, S B, substituting instead an ordinary Pooley weighing balance (of the same pattern as is to be found at every railway station), placed on the left-hand side. Then the pressure on the base of the Pooley balance directly measures P, in lbs.

One of the best known forms of friction-brake dynamometers, fitted with a compensating device, is that designed by Mr. C. E. Amos and Mr. Appold, and is the form used for the larger powers by the Royal Agricultural Society. It is similar to that shown by the next figure; but, besides a hand-adjusting screw, A S, similar to that shown in the last figure, it is provided with a compensating lever, E C D, by means of which the rise or fall of the load, W, is to be attended with a decrease, or increase, in tension on the brake-strap, so that a position of equilibrium is automatically attained without causing inaccuracy in the indications. With a given tension in the brake-strap, and with the load, W, carried so that its point of suspension, A, is opposite the pointer, ⟶, the lever, E C D, takes a vertical position; but as soon as the load, W, is lifted, the lever pivoted at E, moves round to lift with, and virtually increases the length of, the brake-strap, and thus slackens it, allowing the load again to descend. If, on the other hand, the total friction decreases and is insufficient to carry the load in its normal position, the descent of the load presses round the point of the compensating lever to the right, thus tightening the belt and increasing the frictional grip until the conditions are again such as will enable

Digitized by Google

the load to reassume the medial position. If the change in the position of the point of suspension of the load has been due to a temporary cause, this automatic action may restore the balance without further adjustment; but if the departure from the medial position is not small, then the adjustment by the hand-screw must be resorted to. It will be seen that the compensating action cannot come into play except by the rise or fall of the weight from its proper position, and hence the value of the device is confined to its power of limiting that rise and fall.

So long as the Appold brake, like that of the Royal Agricultural Society, is not used for more than 15 H.P., and is sufficiently, but still sparingly, lubricated with tallow or suet, the friction between the wooden blocks and iron wheel is such that the

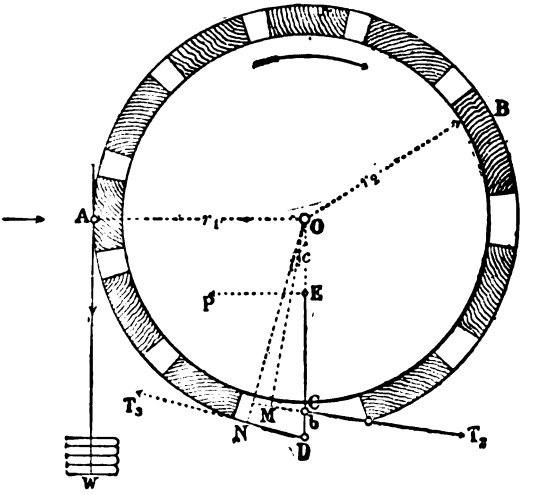

APPOLD'S COMPENSATION BRAKE, USED BY ROYAL AGRICULTURAL SOCIETY.

weight of the brake-strap and blocks with the suspended load, is sufficient, at the ordinary speeds of the engines tested, to carry the load without screwing up the belt (by adjusting screw as shown in last figure) so that there is more than a few lbs. tension

Digitized by Google

at the compensating lever, E C D. Under such conditions the lever does not affect results, and adjustment of the frictional grip and position at which the load is carried has to be made by the hand-screw. The conditions are the same as, or very similar to, those which would obtain if the brake were without compensating lever, but with a belt so slack that the bottom blocks barely touch the wheel.*

Let W = load on brake-strap (see foregoing figure);

T_2 T_3 = tensions at two ends, C and D, of strap connected to lower ends of compensating levers;

P = pull on upper end, at E, of these levers;

r_1 r_2 = radii of brake-strap and wheel respectively;

F = total friction of brake-strap.

In the correspondence upon Mr. Beaumont's paper, Professor T. Alexander and Mr. A. W. Thomson considered that the Appold brake gave quite accurate results when it was used properly. Let the lever, E C D, take some definite fixed position, say to the left of the vertical when the engine is working smoothly; in this position the lever may be supposed to be fixed to the ground. The tension of the brake-blocks on the lever, towards the right at C, and left at D, are represented in the figure by T_2 and T_3. On the other hand the reactions of the lever on the brake-blocks are T_2 towards the left at C, and T_3 towards the right at D; then, since there is equilibrium, the sum of the moments round O, the centre, of (1) friction of brake-blocks, (2) weight, W, and (3) the tensions of lever, T_2 and T_3, is zero. Taking the lever now, not as fixed to the ground, but as pivoted at E; then R, the resultant of T_2 and T_3, must pass through E. T_2 and T_3 may now be replaced by R; and the sum of the moments round O, the centre, of (1) friction of brake blocks, (2) weight, W, and (3) the force, R, is zero. Resolving R into vertical and horizontal components, V, and, P, acting at the point, E; then, since E is vertically under O, the line of action of V, passes through O, and its moment is zero; and therefore the sum of the moments round O, the centre, of (1) friction of brake-blocks, (2)

* Extract, with following three figures, from *The Proc. Inst. C.E.*, vol. xcv., session 1888-89, by kind permission of the Council. In Paper by W. W. Beaumont, M.Inst.C.E., on "Friction Brake Dynamometers."

Digitized by Google

weight, W, and (3) the horizontal force, P, acting towards the left at E, is zero; that is—

$$W r_1 = P \times OE + F r_2.$$

The amount of this horizontal force, P, can be easily measured by a spring-balance. With a low coefficient of friction, the tension on the brake-strap has to be increased; and since the ratio existing between T_2 and T_3 is constant, depending on the proportions of the lever, it follows that, P, may be of considerable amount; and any quantitative results calculated without taking it into account will be erroneous. With a high coefficient of friction the force, P, may be small, and the results might probably be not far wrong, even if, P, were left out of account. In every case, however, where accuracy is desired, the moment of, P, must be considered.

In the same correspondence on friction-brake dynamometers, Professor A. Jamieson stated that about a year ago he had occasion to make a series of tests on a Griffin gas-engine. The brake proposed by the makers of this engine was the same as that used by the Royal Agricultural Society described and commented upon in the Paper. Owing to the evident defects of the Agricultural Society's brake, one of the following form was

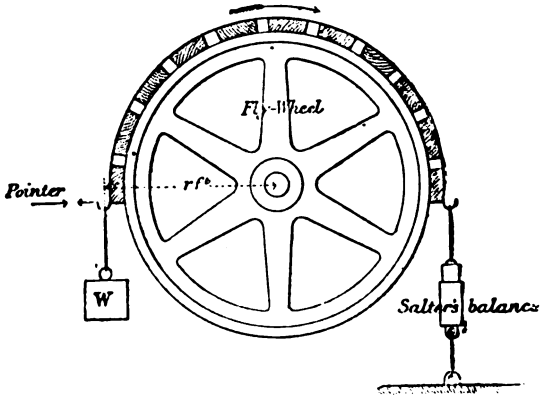

adopted instead, which gave fairly good results with the gas-engine, developing 13·6 brake H.P. The chief objections, however, to it were:—1. That even for that small power, it was necessary to have two brakes, one brake upon each fly-wheel. 2. That the lubrication of the brakes required considerable

Digitized by Google

attention. 3. That the back pull, indicated by the Salter's balances, varied considerably, and hunted up and down within limits which necessitated some guessing and frequent observations. 4. That the oil or grease for lubricating the fly-wheels bespattered the floor, the wall opposite, and the observer's clothes, when reading the Salter's balances.

He had again, December 14, 1888, had an opportunity of testing an identically similar gas-engine at Kilmarnock. This time he employed only one brake fixed on one of the fly-wheels. The next figure illustrated this form of brake, which he understood was the same as that which had been used by the jurors at

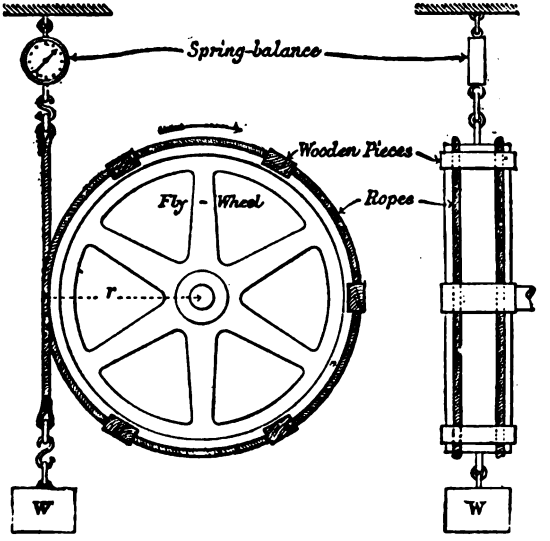

the late gas-engine trials under the auspices of the Society of Arts. The following Table showed the more important results:—

Mean revolutions of brake fly-wheel per minute, .	205
Maximum deviation from mean speed, per cent., .	5¼
Dead load, W, in lbs., ...	157
Mean back pull on balance, in lbs., ...	4
Radius of dead load, W, from centre of brake wheel, = r in feet, ...	2·352
Size of each two small ropes, diameter in inches,	0·6

Digitized by Google

Mean brake H.P. during two hours' run, . . .	15·23
Gas consumption per brake H.P. in cubic feet per hour,	24·3
,, ,, indicated H.P. ,, ,, .	18·9

He considered this form of brake preferable to any one of the numerous forms that he had tried, and believed it could be adopted for large powers, and for long continuous runs for the reasons:—

1. It could be constructed on very short notice from materials always at hand in every factory or workshop, and at very little expense. 2. It was so self-adjusting that no very accurate fitting was required. 3. It could be put on and taken off in about one minute; being very light and of small bulk it could be hung up or laid by in a cupboard. 4. It needed little if any attention for lubrication. 5. The back pull registered by the spring-balance was steady, and might be made a minimum by properly adjusting the load, W, before commencing the trial run. 6. The brake-wheel soon attained such a maximum temperature that the radiating heat balanced the heat being generated by friction. 7. It might be used for small as well as for large powers, without any special attendant apparatus except a weight and a spring-balance. 8. For larger powers only more, or larger, or flatter ropes, or a larger brake-wheel, were required.

Since the above tests were taken he had been called upon to test the "Ajax" gas engine as made by the Glasgow Gas Engine Co. at their Bridgeton Works, Glasgow. The brake used on 9th March, 1889, was of the form shown by Fig. 1, and on March 29 by Fig. 2. They are of the same kind as those employed by the jurors in the late trials of Gas Engines under the auspices of the Society of Arts, London, and give much more satisfactory and uniform results than any other form of brake hitherto devised for light work. The substitution of the spring balance in Fig. 2, for the dead weight in Fig. 1, is a decided advantage, since the net load (or difference between the actual readings on the lower and that on the upper balance) can be so easily kept constant throughout the run. The balances, &c., were most carefully tested against registered weights, after the runs and the proper allowance was made for the net weight of the part of the lower balance which aided the positive pull, as well as for the false zeros of each.

The circumference of the circle with radius from centre of fly-wheel to centre of dead-weight was exactly 17 feet.

Careful observations of the gas meter, speed indicator, and brake load were taken *simultaneously* every *ten* minutes throughout the whole of the *three* hours' continuous tests on 9th March, and every *fifteen* minutes throughout the *six and a-half* hours' run on 29th March.

Digitized by Google

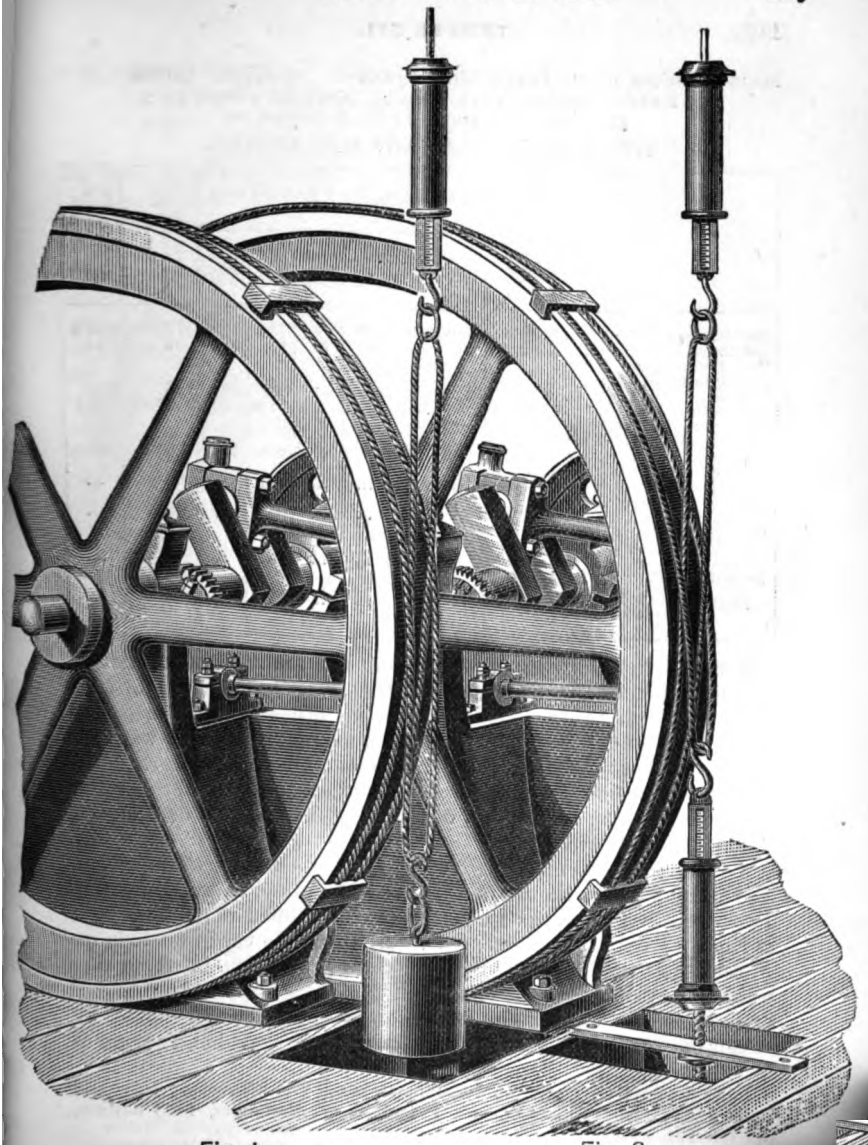

Fig. 1. Fig. 2.

THE TWO FORMS OF BRAKE
USED BY PROF. JAMIESON
IN TESTING THE "AJAX" GLASGOW GAS ENGINE
FOR BRAKE HORSE-POWER.

Digitized by Google

MEAN RESULTS OF A THREE HOURS' AND A SIX HOURS' CONTINUOUS B.H.P. TESTS AT FULL NORMAL WORKING POWER; ALSO, HALF-AN-HOUR AT FULL POWER OF THE "AJAX" GLASGOW GAS ENGINE.

	March 9, 1889, Mean of Three Hours' Tests, 9.20—12.20.	March 29, 1889, Mean of Six Hours Tests, 12 to 6 p.m.						Mean of Previous Six Hours' Tests, 12—6.	March 29, 1889, Full Power Tests, 6—6.30 p.m.
		First Hour, 12—1.	Second Hour, 1—2.	Third Hour, 2—3.	Fourth Hour, 3—4.	Fifth Hour, 4—5.	Sixth Hour, 5—6.		
Revolutions per Minute, .	173·5	180·5	180·3	175·3	176·1	175·2	177·3	177·5	200·2
Net Brake Load, in lbs.. .	99	98	98	98	98	98	98	98	98
Gas Consumption (*Main only*) in Cubic Feet, per Hour.	189·6	184	186	181	181	183	185	183	218
Brake-Horse-Power. . .	8·84	9·1	9·1	8·85	8·9	8·84	8·95	8·96	10·1
Gas, per Brake-Horse-Power, in Cubic Feet, per Hour, ...	21·5	20·2	20·4	20·4	20·3	20·7	20·6	20·4	21·6
Mean Effective Pressure, in lbs., per Square Inch,	60·8	...	...	...	...	...	...	63	...
Indicated Horse Power from above data, . .	10·04	...	...	...	...	...	...	10·6	...
Gas, per I.H.P., in Cubic Feet, per Hour (*Main only*), ...	18·9	...	...	...	...	...	...	17·2	...
Mechanical Efficiency of Engine, or $\frac{\text{B.H.P}}{\text{I.H.P.}} \times 100$,	87·9%	...	...	...	...	...	...	84·2	...

Transmission Dynamometer.—There are many forms of transmission dynamometers,* by which the power, being transmitted from a steam engine, water-wheel, or other prime motor to shafting or to any particular machine, may be registered without absorbing more than a small and known amount of power.

One of the simplest and most easily understood is that devised by Profs. Ayrton and Perry, of the City and Guilds of London Technical Institute.

† "The instrument, as seen in the figure, consists of a pulley, F, rigidly fixed to the shaft, C D, a loose pulley, G, and a pulley, H, joined by the spiral springs, B, to the ribbed plate, E, which is rigidly fixed to the shaft, C D. If, then, the engine belt is on F, and the belt to the dynamo or driven machine on H, or *vice versa*, the springs, B, will be stretched, depending on the 'torque' or twist transmitted. The extension of these springs causes, by means of a small link-motion seen at the lower right-hand corner of

* For a complete treatise on dynamometers see *The Electrician*, Nov. and Dec., 1883; also Prof. Goodeve's *Principles of Mechanics*, 1883 edition, pp. 188-191.

† From Prof. Ayrton's Lecture on "Measuring-Instruments for Transmission of Power." Published in *The Proceedings of the Society of Telegraph Engineers*, Vol. xi., pp. 265-267.

Digitized by Google

the figure, the bright bead, A, at the end of a long arm to approach the centre. Hence the smaller the radius of the circle described

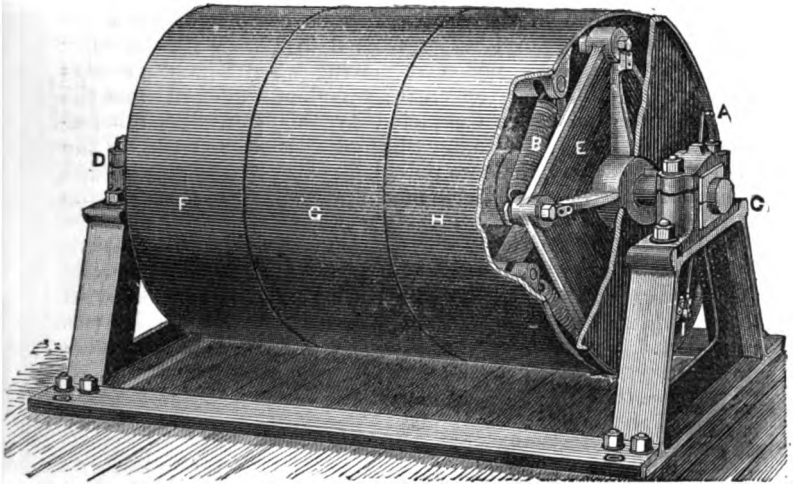

PROFS. AYRTON & PERRY'S TRANSMISSION DYNAMOMETER.

by this bright bead as it revolves, the greater the torque.* Consequently, the horse-power transmitted is at once obtained from observing the indicated torque and the speed of rotation. The arm carrying the bead is slightly flexible, and when no power is being transmitted the bead is pressed with a certain force against the rim of the front plate, hence the bead does not commence moving until a certain prearranged horse-power at a given speed is being transmitted; its whole radial motion, therefore, is completed for a certain additional transmitted horse-power, the necessary addition depending on the power of the springs and the leverage of the link-motion. Consequently, a large change in the radius of the circle of light is produced by a small change in the transmitted horse-power. Further, one of the pins in the links can be taken out and put into another hole, which has the effect of greatly altering the leverage of the links, thus increasing the magnification and causing the motion of the bead to be completed for another range of power. For example, the sprin

* The word torque was first suggested by Prof. James Thomson, Glas University, and means the turning moment or turning force multiplie its distance from centre of shaft.

Digitized by Google

and link-motion may be so arranged that with one of the two adjustments the bead may commence to move when 8 horse-power is being transmitted at a certain speed; the whole motion from the circumference to the centre may be completed, when the horse-power transmitted varies from 8 to 12. With the other adjustment, the bead may start moving when 4 horse-power is being transmitted, and the entire travel of the bead from the circumference to centre completed by this transmitted horse-power increasing from 4 to 6. Slipping either the driving or the driven belt on to the loose pulley, G, causes the transmission dynamometer and the dynamo machine to stop while the engine is going on."

Dynamometer Coupling.—"The next figure shows Profs. Ayrton and Perry's dynamometer coupling, which differs only from the preceding in that it is intended to be used with machinery driven directly by shafting where belting is not employed. For instance, this coupling may be used to measure the horse-power given by a fast-speed engine to a dynamo or other machine driven directly by it, or it may be employed to measure the power given by a marine engine to the screw or to the paddles, or generally the horse-power transmitted along any line of shafting; the spring coupling, in fact, replacing the ordinary coupling used with such shafts.

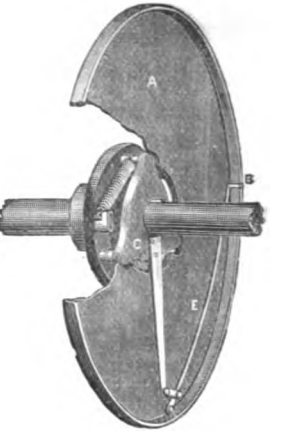

PROFS. AYRTON & PERRY'S DYNAMOMETER COUPLING.

"One of the halves of the coupling seen in the figure is keyed to the driving shaft—for example, the shaft of a fast-speed engine; and the other to the driven shaft—for example, that of the dynamo. The half, C, is attached to the other half by means of the spiral springs, and the stretching of these is therefore a measure of the torque. The angular motion of the one relatively to the other causes the bright bead, B, to approach the centre, and, as before, the radius of the circle of light measures the horse-power transmitted at any particular speed. The arm, E, carrying the bead, is also, as before, slightly flexible, so that when no power is being transmitted the bead, B, is pressed with a certain force against the rim of the larger plate. Hence the bead does not commence to move until a certain prearranged horse-power, at

Digitized by Google

a given speed, is being transmitted, and the whole motion is completed for any prearranged excess beyond this, thus enabling delicate measurements to be made at powers a little more or less than that normally transmitted.

"By a proper arrangement of the link-motions, we have succeeded in making the radial motion of the bead in both instruments exactly proportional to the extension of the springs or twist transmitted.

"The transmission dynamometer and dynamometer coupling just decribed have the great advantage over any sort of laboratory dynamometers, in that the former have not to be put into position and adjusted for each particular experiment, but are always ready, and are always indicating the power transmitted at any given speed. If, for example, a dynamometer coupling be inserted in the shafting of a factory in place of the ordinary coupling, a glance at it at any time will show the power that is being transmitted by it. If two such dynamometer couplings be inserted at two places in the same set of shafting, the difference between the transmitted powers indicated by them is the power utilised by the machinery driven by that portion of the shafting that is between them. At present, masters of works, we think, have necessarily but rather a vague idea of the amount of power expended in different parts of their works—how much, for example, is used to drive one portion of the machinery and how much to drive some other. The substitution of a few dynamometer couplings, at well-chosen places, for the ordinary couplings, would settle this question."

Digitized by Google

LECTURE XVI.—QUESTIONS.

1. Define the horse-power of an engine. Explain the method adopted for measuring the work actually done in the steam cylinder of an engine. Write down the formula by which the horse-power of an engine is obtained.

2. In a steam engine the diameter of the steam cylinder is 50 inches, the length of stroke is 7 feet, the number of revolutions is 25 per minute, and the mean effective pressure of the steam is 11·3 lbs. Find the horse-power of the engine. *Ans.* 235·3.

3. In a beam engine the mean pressure of the steam on the piston is 20 tons, and the length of the crank is 2½ feet, what is the horse-power when the crank shaft makes 30 revolutions per minute? *Ans.* 407·2.

4. The cylinder of a steam engine is 3 feet 6 inches in diameter, the length of stroke is 5 feet, and the crank makes 30 revolutions per minute, what is the I.H.P. of the engine, the mean effective pressure of the steam in the cylinder being 10 lbs. on the sq. in. above the atmosphere? *Ans.* 125·9

5. It is recorded of one of the earliest steam engines that it raised 18¾ cubic feet of water through a height of 19 feet at each stroke, and made 7¼ strokes per minute. The consumption of coal was 32 cwt. in 24 hours. Find the number of units of work obtained by burning 112 lbs. of coal, or what was *the duty* of the engine, also pounds of coal per H.P. per hour. *Ans.* 7; 264,160 and 30 lbs.

6. What diameter of cylinder will develop 50 horse-power with a four-foot stroke, 40 revolutions per minute, and a mean effective steam pressure of 30 lbs. above the atmosphere, the engine being non-condensing? *Ans.* 14·78.

7. The diameter of cylinder of non-condensing engine is 18 ins., length of stroke 2 ft. 6 ins., mean pressure of steam 20 lbs. on sq. in. above the atmosphere. Find the number of revolutions per minute when the engine develops 27 H.P. (*Adv. S. and A.*, 1888.)

8. If 200 tons be lifted 5 feet in 5 minutes by a steam engine, wherein the area of the piston is 400 sq. ins., the mean pressure of the steam on the piston is 25 lbs. on the sq. in., the length of stroke is 4 feet, and the number of double strokes made in a minute is 15, what proportion of the power applied to the piston is lost in the working of the machinery? *Ans.* 62 per cent.

9. Define the horse-power of an engine. If an engine consumes 2 lbs. of coal per horse-power per hour, how many foot-pounds of work will it perform when consuming 112 lbs. of coal? *Ans.* 1,848,000 per minute.

10. Having obtained indicator diagrams from a single cylinder engine, state particularly, and with the necessary details and sketches, the method of obtaining the indicated horse-power. A motion of 1″ in the pencil of the indicator, as due to steam pressure, = 20 lbs. on the sq. in., what is the H.P. at 90 revols. per min., if diam. of the piston be 10″, stroke 20″, area of diagram 8 sq. in., and length 5″? *Ans.* 22·8.

11. If the boiler of an engine gives out every minute 100 cubic feet of steam which propels the piston with an average pressure of 50 lbs. on the square inch, what is the horse-power of the engine? *Ans.* 21·8.

Digitized by Google

12. An engine is competent to raise 70 millions of pounds through one foot by the burning of 112 lbs. of coal, how many pounds of coal does it consume per horse-power per hour? *Ans.* 3·17 lbs.

13. The cylinder of a single-acting pumping engine is 72 inches in diameter with a stroke of 10 feet, and it works a pump whose plunger is 23 inches in diameter with a stroke also of 10 feet. The load is 142 lbs. per square inch of the area of the plunger. Find the mean pressure of the steam per square inch of the piston and the horse-power when the engine makes 8 strokes per minute. *Ans.* 14·49 lbs. H.P. = 143.

14. The two cylinders of a locomotive engine are each 17 inches in diameter, and the length of stroke is 24 inches, also the driving wheel makes 100 revolutions per minute, and the mean effective pressure of the steam is 80 lbs. Find the horse-power. *Ans.* 440·3.

15. In a compound cylinder marine engine, the diameter of the high-pressure cylinder is 57 inches, and that of the low-pressure cylinder is 100 inches, the stroke of each piston being 2¾ feet. The mean pressures of the steam in the respective cylinders are 26 lbs. and 8½ lbs., and I.H.P. is 1,028; find the number of revolutions made in one minute. With what view is an engine constructed in the manner pointed out? *Ans.* 46·3.

16. The area of the piston of an engine is 3 square feet, the pressure of the steam is 15 lbs. per square inch above the atmosphere on admission, and the steam is cut off at ⅓ of the stroke; the crank shaft makes 40 revolutions per minute, and the length of the stroke is 3 feet, find the H.P. (given hyp. log. 3 = 1·0986124). *Ans.* Exhausting at zero-pressure = 65·9. See p. 154*a*.

17. The cylinder of an engine is 3 feet 6 inches in diameter, the stroke is 5 feet, and the steam is cut off at ⅓ of the stroke. If steam be admitted into the cylinder at 45 lbs. pressure, find the work done in one stroke (log. 3 = 1·0986124). *Ans.* 218,061 ft.-lbs. See p. 154*a* for working out.

18. Steam enters a cylinder at 80 lbs. absolute, and is cut off at ⅓ of the stroke. The diameter of the piston is 40 inches and the length of stroke 5 feet, the number of revolutions being 50 per minute. Back pressure 3 lbs. absolute, find the horse-power of the engine. *Ans.* 1,009.

19. The stroke of a piston is 5 feet, and its diameter is 4 feet, steam is admitted at 20 lbs. absolute (no back pressure), and is cut off at ¼ stroke find work done in one stroke. If steam be cut off at ⅓ stroke, and the final pressure is required to remain unchanged, what should be the diameter of the cylinder in order that the work done may also remain unchanged? (log. 2 = ·6931472, log. 3 = 1·0986124). *Ans.* 153,192 ft.-lbs.; 43·1 ins.

20. In a compound cylinder tandem engine the steam is cut off at ⅓ of the stroke in the high-pressure cylinder, the areas of the pistons are as 1 to 3, and the diameter of the smaller cylinder is 29 inches; investigate an expression for the work done in one stroke. Example: Find the horse-power of the engine when the initial pressure of the steam is 85 lbs. per square inch above that of the atmosphere—viz., 15 lbs., the back pressure in the large cylinder is 3 lbs. per square inch, and the speed of each piston is 300 feet per minute. *Ans.* 278 taken isothermally.

21. Describe a method of obtaining the brake horse-power of an engine, and state the advantages to buyer and seller of adopting this method over that of nominal or indicated horse-power. An engine is making 150 revolutions per minute, the diameter of the brake pulley being 4 feet, and the pull on the brake 50 lbs., what is the B.H.P.? *Ans.* 2·85.

22. Explain by a sketch and index, using the first letter of the word, a transmission power dynamometer, and explain the advantages of this instrument to an engineer.

Digitized by Google

23. The diameter of the cylinder of an engine being 53 inches, the stroke 5 feet, and the number of revolutions 30 per minute, find the mean pressure of the steam to develop 600 indicated horse-power. *Ans.* 29·9.

24. An engine working without expansion has a piston of 144 square inches in area with a 12-inch stroke, and the number of double strokes per minute is 60. Steam is supplied at a temperature of 293° F. (the volume of 1 lb. of steam at 293° F. being 7 cb. ft.), find units of heat required per minute for steam from water at 60° F. (*Adv. S. and A. Exam.*, 1889.) *Ans.*

Having frequently found that students experience a difficulty in working out such questions as Nos. 16 and 17, I have thought it advisable to give their solution in full so that they may the more readily understand how to do similar questions.

Question 16 of Lecture XVI.

Given, A = Area of piston = 3 sq. ft. = $3 \times 144 = 432$ sq. ins.

P = abs. press. per sq. in. = $15 + 15 = 30$ lbs.

l = point of cut-off = $\frac{\text{stroke of engine}}{\text{ratio of expansion}} = \frac{L}{r} = \frac{3 \text{ ft.}}{3} = 1$ ft.

N = No. strokes per minute = (revolutions) $\times 2 = 40 \times 2 = 80$.

$\log. r = 1{\cdot}0986124$.

$$\text{By formula, H.P.} = \frac{A\,L\,N\left\{\frac{P}{r}(1 + \log. r) - p_b\right\}}{33000}$$

Substituting numerical values—

$$\text{H.P.} = \frac{432 \times 3' \times 80\left\{\frac{30 \text{ lbs.}}{3}(1 + 1{\cdot}0986) - 0\right\}}{33000}$$

$$\therefore \text{H.P.} = \frac{432 \times 3 \times 80 \times 10 \times 2{\cdot}0986}{33000} = 65{\cdot}9.$$

N.B.—No value being given, p_b, it is assumed as = 0 lbs.

Question 17, Lecture XVI.

Given, d = diameter of cylinder = $3\frac{1}{2}$ ft. = 42 ins.

$$\therefore A = \pi r^2 = \frac{22}{7} \times 21 \times 21 = 1386 \text{ sq. ins.}$$

P = 45 lbs. (assumed as the total pressure).

L = length of stroke = 5 ft.

r = ratio of expansion = 3.

Required—The work done in one stroke.

By formula—

$$\text{Mean press.} = \frac{P}{r}(1 + \log. r) - p_b \text{ in lbs. per sq. inch.}$$

No value being given for, p_b, it is assumed as = 0.

Work done = space passed through × force applied

$$= L \times \frac{P}{r}(1 + \log. r) \times A.$$

Substituting numerical values—

$$\text{Work done} = 5 \times \frac{45}{3} \times (1 + 1{\cdot}0986) \times 1386$$

$$= 5 \times 15 \times 2{\cdot}0986 \times 1386$$

$$= 218150 \text{ ft.-lbs. nearly.}$$

Digitized by Google

LECTURE XVII.

CONTENTS.—Action of the Crank—Tangential and Radial Forces—Diagrams of Twisting Moments with Uniform and with Variable Steam Pressure on Piston, and neglecting as well as taking Account of the Obliquity of Connecting-rod—Effect of Inertia of Moving Parts—Case of a Horizontal Engine with Connecting-rod of Infinite Length—Graphic Representation of the Effect of Inertia—Case of a Horizontal Engine with Connecting-rod of Finite Length—General Problem of Determining the Stresses Produced by a heavy Body Moving along a Straight Line Illustrated by the Case of an Actual Slide Valve.

Action of the Crank—Tangential and Radial Forces.—In most steam engines the conversion of the reciprocating motion of the piston into circular motion is effected by means of the crank and connecting-rod.

The turning or tangential force exerted by the connecting-rod on the crank varies with the position of the crank itself. Thus, when the centre line of the crank coincides with a line drawn through the centre of the cylinder and the centre of the crank shaft, the crank is said to be at the "dead points," and the connecting-rod exerts no rotational effort on it. The crank arrives in those positions twice in one revolution, just when on the point of reversing the direction of motion of the piston. These positions are O A and O B in the next diagram. Again, when the crank is at an angle of about 90° to the centre line through the cylinder and crank shaft, the tangential force is a maximum.

Diagram of Twisting Moments—Neglecting Length of Connecting-Rod.—The simplest case is that in which the pressure on the piston is uniform throughout the stroke, and the obliquity of the connecting-rod is neglected. Then the pressure or thrust, Q, on the connecting-rod is equal to the total pressure, P, on the piston (see next figure).

Suppose the crank to be in the position, $O C_1$, then by the parallelogram of forces the thrust, Q, on the connecting-rod may be resolved into two components, one, $C_1 R$, acting along the line of the crank and representing a radial pressure, R, on the crank-shaft bearing; the other, $C_1 T$, acting at right angles to $O C_1$, and representing the tangential pressure, T, acting on the crank pin. Of course, the *whole* thrust on crank-shaft bearing is equal to the *whole* pressure on piston.

Let the angle $A O C_1 = \theta$, $\therefore \angle Q C_1 O = \theta$, $\because C_1 Q$ is $\parallel$ to A O.
Then the radial pressure, R, or $C_1 R = Q \cdot \cos \theta$.
And the tangential pressure, T, or $C_1 T = Q \cdot \sin \theta$.

Digitized by Google

These components may be plotted out separately for every position of the crank by curves in the following manner:—Let OC_1 represent Q, to any convenient scale, and lay off to the same scale $Ot_1 = T = C_1T$, the tangential component of Q. Then t_1 is a point on the curve, and Ot_1 measures to scale the tangential pressure on the crank pin for the position, OC_1, of the crank. To find other points on this curve, take any other position of the crank and plot off along that line of the crank the tangential component of Q for that position. If we find a number of points and join them, they

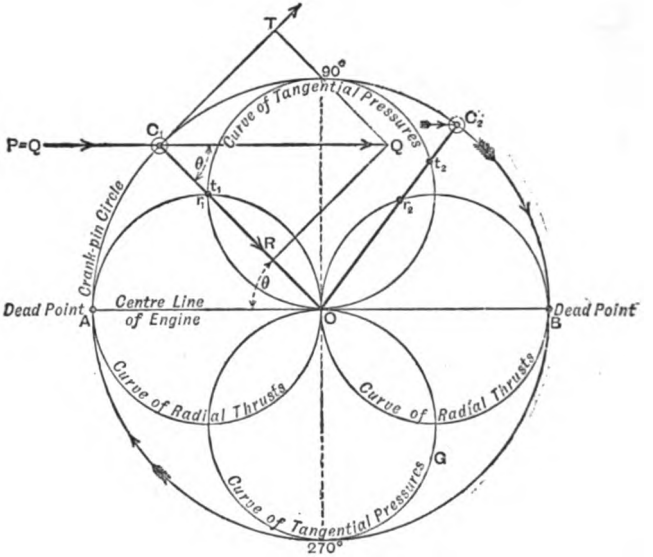

POLAR CURVES OF TANGENTIAL FORCE (T) ON CRANK-PIN, AND RADIAL THRUST (R) THROUGH CRANK, WITH UNIFORM PRESSURE ON PISTON AND NEGLECTING OBLIQUITY OF CONNECTING-ROD.

will be found to lie on the circumference of two circles described with O to 90° and O to 270° as diameters. Similarly, if we lay off Or_1 on the position, OC_1, of the crank, equal to the radial component of Q, for that position of the crank, and do the same for a number of other positions, we have, by joining the points, two complete circles described with OA and OB as diameters, representing the radial thrust on the crank-shaft bearing for any position of the crank. In the position of the crank taken ($\theta = 45°$) the radial and tangential components are equal, and, therefore, r_1 coincides with t_1. These circles are known as "*Polar*" curves. For any other position, OC_2, of the crank, the tangential or turning force is given by Ot_2, whilst the radial thrust on the crank shaft is given by Or_2.

The TWISTING or TURNING MOMENT or TORQUE on the crank shaft at any position *is equal to the tangential pressure on the crank pin in that position multiplied by the length of the crank.*

Digitized by Google

Let r = radius of crank-pin circle or the length of the crank.

,, θ = the angle made by the crank with the line of dead points.

Then the twisting moment = $Q r \sin \theta$.

Or, ,, ,, = $P r \sin \theta$ (for in this case P = Q).

Since the polar curves, O to 90° and O to 270°, represent the tangential forces ($P \cdot \sin \theta$), their values must be multiplied by r, the length of the crank, in order to find the TWISTING MOMENT at any point; but, seeing that, r, is constant, the polar curves may be taken to represent the *relative* values of the twisting moments.

The twisting moments may also be represented by the following diagram, in which the horizontal line represents the path of the crank, and the height of each vertical ordinate gives the tangential force or the twisting moment for that point. To draw the diagram for one stroke of the piston, or one half revolution of the crank, lay off a horizontal line equal to the semi-circumference of the crank-pin circle, and divide it into 10 equal parts. Each division then represents a movement of 180 ÷ 10 = 18° of the crank.

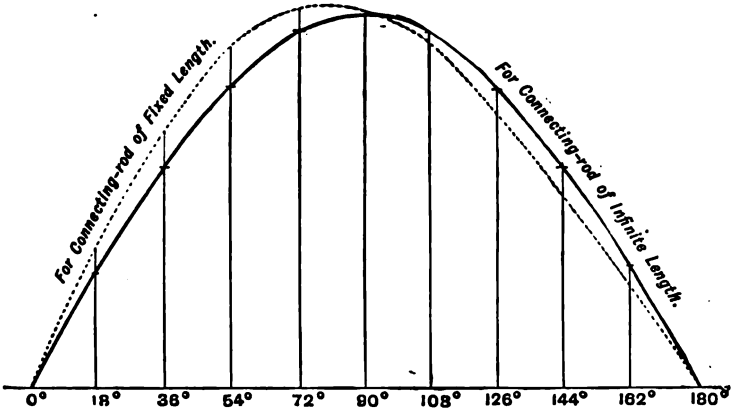

DIAGRAMS OF TWISTING MOMENTS FOR ONE HALF REVOLUTION OF CRANK.
Both Curves are Drawn on the Assumption of Uniform Pressure on Piston.

Then calculate by the above formula, or plot out by the previous diagram of polar curves, tangential pressures for each of the 10 positions of the crank, and lay them off vertically at each division. Join these points, and we have the above full line curve which represents the twisting moments for one half revolution, neglecting the obliquity of the connecting-rod, and when the pressure on the piston is uniform throughout. A curve for the radial thrust through crank could be plotted out in the same way.

In the early days of the steam engine, it was imagined that the use of the crank and connecting-rod involved a considerable loss of the work developed by the piston. The fallacy of this idea may now be made clear.

The pressure on the crank-pin in the direction of rotation is = P sin

Digitized by Google

therefore, in order to obtain the mean tangential pressure during a half revolution of the crank, we have only to find the mean value of sin θ, and multiply it by, P, the total mean pressure on the piston.

For an approximate result take the value of sin θ at every 10 degrees of the crank's movement and divide the total by 18, the number of divisions taken, thus—

Sin	10°	·173
,,	20°	·342
,,	30°	·500
,,	40°	·643
,,	50°	·766
,,	60°	·866
,,	70°	·939
,,	80°	·985
,,	90°	1·000
,,	100°	·985
,,	110°	·939
,,	120°	·866
,,	130°	·766
,,	140°	·643
,,	150°	·500
,,	160°	·324
,,	170°	·173
,,	180°	000
	Total	11·428

$$\therefore P \times \frac{11{\cdot}428}{18} = P \times {\cdot}6349 = \text{(mean pressure)}.$$

Hence, if L = length of stroke = $2r$.

The work done on the crank in one revolution
= Total mean pressure × space passed through,
= P × ·6349 × 2 πr,
= P × ·6349 × 3·1416 × L = 1·9946 PL.

Which is practically the same thing as 2 PL. But, the work done on the piston during one revolution is also equal to 2 PL. Consequently the employment of the crank and connecting-rod involves no loss of power if we neglect the power absorbed by friction due to bearing surfaces, &c.

NOTE.—No such combination of mechanism as the crank and connecting-rod can involve a loss of power (neglecting friction), as it would be contrary to the "principle of the conservation of energy."

Diagram of Twisting Moments—Taking Account of Length of Connecting-Rod.—The next case is that in which the obliquity of the connecting-rod is taken into account, and the pressure on the piston is supposed uniform. In this case, *the twisting moment is equal to the total pressure on the piston,*

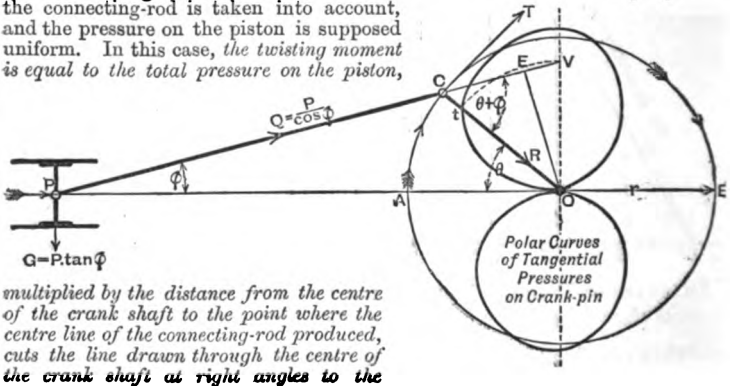

multiplied by the distance from the centre of the crank shaft to the point where the centre line of the connecting-rod produced, cuts the line drawn through the centre of the crank shaft at right angles to the piston's motion.

DIAGRAM OF TWISTING MOMENTS—TAKING ACCOUNT OF LENGTH OF CONNECTING-ROD.

NOTE TO FIGURE.—The pressure along connecting-rod and on the crosshead guides may be found graphically for any position, thus—

Let PO = P, the pressure on piston to any convenient scale.
Then PV = Q, the direction and pressure along connecting-rod to the same scale.
And OV = G, the direction and pressure on the lower crosshead guide to same scale.

$$\text{But } PV \cos\phi = PO \qquad \text{And } \frac{OV}{OP} = \frac{G}{P} = \tan\phi$$

$$\text{Or } Q \cos\phi = P$$

$$\therefore Q = \frac{P}{\cos\phi} \qquad \therefore G = P \tan\phi$$

Digitized by Google

To prove this, let O be the centre of the crank shaft, and O P the centre line of the engine, passing through, O, and the centre of the cylinder. Let O C be the position of the crank, and P C the length of the connecting-rod. Produce P C to cut the vertical through O in the point V, and draw O E perpendicular to P V. Then $\angle$ V E O = $\angle$ P O V; also $\angle$ P V O is common:

$\therefore$ $\angle$ V O E = $\angle$ O P V = ϕ, the inclination of the connecting-rod to centre line of engine.

$$\text{Now the twisting moment} = Q \times OE = \frac{P}{\cos\phi} \times OV \cos\phi = P \times OV.$$

Knowing this, we can readily construct the polar curves. Suppose the crank in the position, O C, produce the centre line of the connecting-rod to cut the line O V in V. With centre, O, and radius, O V, describe the arc, V t, cutting O C in t. Then, t, is a point on the tangential pressures or twisting moment's curve, and the twisting moment for the position, O C, of the crank is thus P $\times$ O t. A similar construction for all the other positions of the crank gives all the other points, and the complete curve may then be described by joining them. We see that the curve is not a circle as in the last case, but differs therefrom in a marked degree. Now plot off the twisting moment at each of the 10 different points by this method on the rectangular diagram (page 157) as before, and we get the dotted line which shows the new diagram of twisting moments. It will be noticed that this curve rises more abruptly during the first quarter of a revolution, and falls flatter during the second quarter than when the obliquity of the connecting-rod is neglected, thus indicating a greater pressure on the crank pin during the first half of the stroke; also, the maximum pressure is reached before half stroke.

We can calculate the several twisting moments in this case without the aid of a scale diagram, thus—

$$\text{The pressure } Q = \frac{P}{\cos\phi}, \text{ also the angle } OCV = \theta + \phi,$$

Since O C P + O C V = 2 right angles, and O C P + θ + ϕ = 2 right angles.

$$\therefore \text{ tangential pressure on crank pin} = T = Q \cdot \sin(\theta + \phi) = \left(\frac{P}{\cos\phi}\right) \sin(\theta + \phi) = P \frac{\sin(\theta + \phi)}{\cos\phi},$$

$$\therefore \text{ the twisting moment} = Pr \frac{\sin(\theta + \phi)}{\cos\phi}.$$

Where $r \sin\theta = l \sin\phi$; r being crank radius, and l the length of connecting-rod.

It is, however, more tedious to work out the results by this formula than by the previous graphic method.

The effect of shortening the connecting-rod is to increase the effort upon the crank pin at the beginning of the stroke, and to decrease it towards the end, thus causing greater irregularity in the tangential pressure on the crank, and greater stress on the crosshead guides. The pressure on the latter is = G = P $\cdot$ tan ϕ, as seen from the last figure and the footn[illegible] below it.

The actual state of things which takes place in practice is, however, n[illegible] so easily represented, for the pressure on the piston is never uniform, bu[illegible] falls away from the point of cut-off. In order, therefore, to construct truer diagram of the twisting moments, we must find the positions of t[illegible]

Digitized by Google

piston corresponding to the various positions of the crank by diagram (page 99), and mark these off on the indicator diagram. The steam pressure for the several positions of the crank can then be read off, and their values inserted for, P, in the equation P × O V or in P $r \sin(\theta + \phi) \div \cos\phi$. The curve of twisting moments on the crank due *merely* to steam pressure on the piston may then be constructed, as shown by the following diagram:—

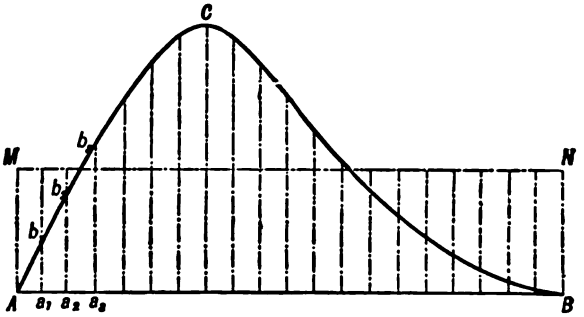

CURVE OF TWISTING MOMENTS, TAKING ACCOUNT OF THE VARIATION OF THE STEAM PRESSURE IN THE CYLINDER, AND WITH A CONNECTING-ROD OF KNOWN LENGTH.

On comparing this curve with the other two (page 157), it will be seen that between the points, C and B, it falls much lower; this is due to the fall of steam pressure during expansion. The rectangle, A M N B, is of the same area as the figure, A C B, and, therefore, A M represents the *mean* twisting moment due to steam pressure on the piston.

When the engine has two cylinders having their pistons working on separate cranks, the curve of total twisting moments on the crank shaft can only be obtained by combining the curves of twisting moments for each crank. This is shown in the following figure, which represents the combined twisting moments on the crank shaft of an engine with two cranks at right angles to each other:—

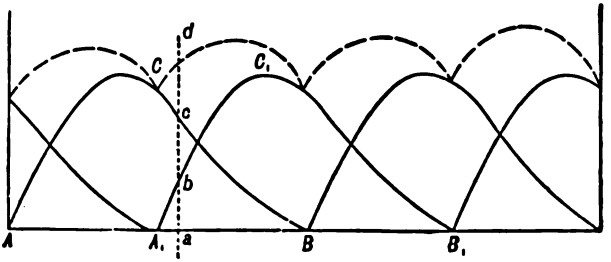

CURVE OF COMBINED TWISTING MOMENTS FOR TWO CRANKS AT RIGHT ANGLES TO EACH OTHER.

Digitized by Google

A C B is the curve of twisting moments on one crank, and $A_1 C_1 B_1$ the curve of twisting moments on the other crank during one-half revolution, the remaining curves being for the other half revolution. To find the total twisting moment at any point, *a*, draw the vertical line *a d*, and make $a d = a c + a b$ (*i.e.*, the sum of the twisting moments on each crank). By finding a number of points in this way, the whole curve of total twisting moments may be plotted out.

Effect of Inertia of Moving Parts.—In finding the twisting moments by these methods, we have neglected a most important effect—viz., the variation of effort on the crank shaft due to the inertia of the moving parts. Since the piston is brought to rest at the end of each stroke, the inertia of the piston, piston-rod, crosshead, and connecting-rod, has to be overcome at the beginning of each stroke, in order to start the motion, and a portion of the energy of the steam is absorbed in doing this; therefore, the actual effort on the crank in the first half of the stroke is *less* than that given by the curves. The energy which is imparted to the moving parts is, however, given out on the crank during the latter part of the stroke, when these moving parts are being brought to rest; therefore, the effort on the crank during the second half of the stroke is *greater* than that shown by the curves. On the principle of the conservation of energy this alternate acceleration and retardation can neither add to, nor subtract from, the total power developed during the stroke. In ordinary cases, therefore, the inertia of the moving parts acts as a fly-wheel would do, and tends to equalise the effort on the crank. The effect, however, at different parts of the stroke is very interesting and instructive, especially when high-initial pressure and a large range of expansion are adopted, combined with heavy and quickly-moving parts. Allowance may be made for this inertia, if the weight of the moving parts and their velocity are known. We can make an alteration on the indicator diagram, reducing the effective pressure at the beginning of the stroke and increasing it at the end. The steam and the inertia stresses can, however, be combined, only so far as some of the effects are concerned. They are combined, of course, in their pressure on the crank pin, &c., but since the dynamical stresses are not taken up altogether by the engine framing, provision must be made for transmitting them to the engine foundation. These dynamical stresses, introduced by arresting the momentum of the moving parts, produce a much more serious effect in fast-running engines than is usually supposed.

Digitized by Google

Effect of Inertia on Moving Parts of a Horizontal Engine with Connecting-Rod of Infinite Length.

The student should now try to follow the following investigations and practical examples.

The more general parts of these investigations, although, perhaps, not quite so simple as might be desired, are, nevertheless, really as simple as the nature of the subject will admit of.

Any attempt to dispense with concise and exact symbolical reasoning, with a view to simplifying matters, involves, among other things, certain assumptions which can only be intelligently appreciated by students who have an extended knowledge of mathematics; while to ordinary students, they invariably lead to erroneous conceptions regarding the effects dealt with.

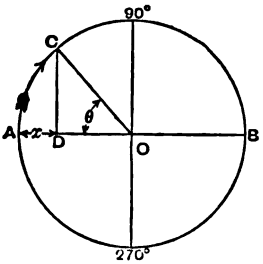

It may be as well to state that we shall not take into account *all* the effects resulting from the conversion of reciprocating into circular motion by means of a crank and connecting-rod, but only those effects which directly influence the propelling force on the piston of the engine,* and unless otherwise stated, we shall suppose the engines to be horizontal.

The first case is that in which the motion of the piston is the same as if the engine worked with a connecting-rod of infinite length, such as, for example, in the common donkey engine arrangement where the crank-pin works in a slotted crosshead at right angles to the direction of the piston's motion.

In the above figure, the arrow indicates the direction of motion of the crank-pin, which, we shall suppose, moves with a uniform velocity.

Let, V, denote the velocity of the crank-pin, in feet per second.
,, v, ,, that of the piston, in feet per second at any instant.
,, O C, $= r$, the radius of crank.
,, A D, $= x$, or any distance the piston may be from the commencement of its stroke.

Then, when the crank-pin is at the position, C, the position of the piston will correspond with the position, D.

Now, it is well-known that if a body be constrained to move in a circular path, it (the body) must be continually subjected to an acceleration in the direction of the centre of the circle in which it moves.

If, a, denote the magnitude of this centripetal acceleration,
,, V, ,, the velocity of the body in feet per second,
,, r, ,, the radius of the circle in feet,

Then,

$$a = \frac{V^2}{r}.$$

* See Paper by the late Prof. Fleeming Jenkin, published in the *Transactions of the Royal Society of Edinburgh*, vol. xxviii. (1879), p. 703, in which will be found a rigorous analysis of the forces in a reciprocating steam engine of practical proportions, accompanied by curves of crank-pin effort.

Digitized by Google

From this expression we can obtain another for the acceleration of the piston, as follows:—Since the acceleration of the crank-pin at point, C, of its revolution is in the direction, C O, and since the acceleration of the piston at point, D, of its stroke must be in the direction, A O (because change of its motion can only take place in that direction), if C D be drawn perpendicular to A O, we have,

$$\frac{\text{acceleration of piston}}{\text{acceleration of crank-pin}} = \frac{\text{O D}}{\text{O C}} = \frac{r - x}{r}.$$

$$\text{Or, acceleration of piston} = a \cdot \frac{r - x}{r},$$

$$\text{(Substituting the value for, } a\text{, in last equation)} = \frac{\text{V}^2}{r^2}(r - x).$$

Let, W, denote the weight of the reciprocating mass in lbs.
,, F, ,, the force absorbed or produced by the acceleration or retardation of the reciprocating parts, also in lbs.
,, g, ,, the accelerative effect of gravity.

Then,

$$\text{F} = \frac{\text{W V}^2}{g r^2}(r - x).$$

To express this in lbs. per square inch of the piston,
Let A = area of the piston in square inches, and
,, p_a = pressure per square inch due to acceleration of parts moving horizontally.
Then,

$$\text{F} = p_a \text{A}.$$

$$\therefore p_a = \frac{\text{W V}^2}{\text{A} g r^2}(r - x), \quad . \quad . \quad . \quad . \quad (1.)$$

When the piston is in *any* position, x, of the stroke,
Let p_x be the pressure of the steam per square inch at the point, x.
,, p_e be the net or effective pressure per square inch at the point, x.
Then,

$$p_e = p_x - p_a.$$

$$= p_x - \frac{\text{W V}^2}{\text{A} g r^2}(r - x), \quad . \quad . \quad . \quad . \quad (2.)$$

Now, it admits of easy proof that equation (1) represents a straight line which is completely determined when we know the positions of any two points on it.
Thus, when the piston is at the beginning of its stroke,

$$x = 0 \therefore p_a = \frac{\text{W V}^2}{\text{A} g r}.$$

At the middle of the stroke,

$$x = r \therefore p_a = 0;$$

At the end of the stroke,

$$x = 2r \therefore p_a = -\frac{\text{W V}^2}{\text{A} g r}.$$

Digitized by Google

The results obtained above are the mathematical expressions of the remarks already given on page 161 regarding the effects of inertia of moving parts.

Graphic Representation of the Effect of Inertia.

The following figure gives a graphical representation of the results just deduced.

A B C D E, represents an indicator diagram;

M O N, represents the inertia line, the ordinates of which are measured from the horizontal atmospheric line, E D, as given by equation (1.)

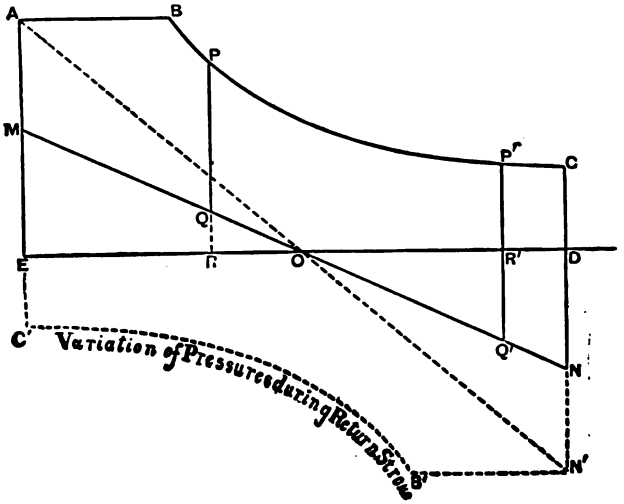

THEORETICAL INDICATOR DIAGRAM CONVERTED INTO A STRESS DIAGRAM ON CRANK-PIN.

M O N thus becomes the virtual base line of the diagram, from which pressures are to be measured instead of from E D, the horizontal atmospheric base line of the indicator diagram. Thus, the *effective* pressure of the steam at the beginning of the stroke is given by M A; and at any other point before the middle of the stroke by, say Q P; also, for any other point before the end of the stroke, by Q' P', and so on. On examining the above figure, it is evident that, with a given initial pressure, there is a limit to the speed of the engine which, if reached or passed, would be productive of very serious consequences. For instance, if the inertia line was represented by, A O N', the result would be a shock at the beginning of each stroke.*

* The dotted line, N' B' C' E, shows the variation of pressures on the crank-pin during the return stroke. If the engine was running very slowly so that we could neglect inertia stresses, the pressure at the end of the return stroke, at E, would change from, E C', to, E A, thus causing a knock if the brasses were loose. But, if the inertia stresses were represented by the line, A N', the pressure would change from, A C', to zero, and then increase gradually as the piston began its forward stroke; thus giving a much smoother working engine. As a matter of fact engines have been made in which the intertia curve rose well above the steam curve, and still the working of the engine was satisfactory and without shock.

Digitized by Google

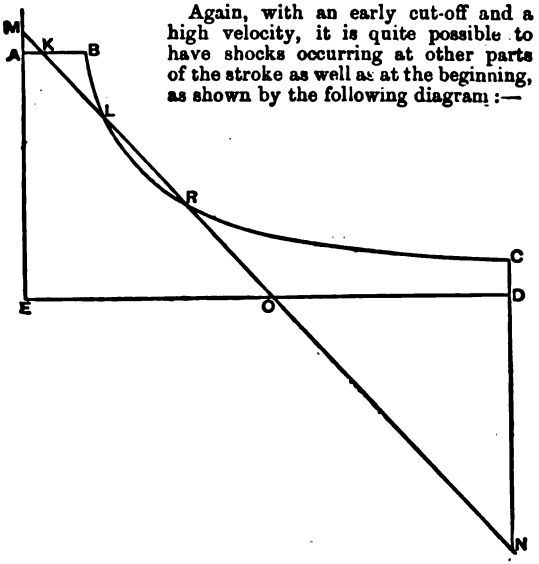

Again, with an early cut-off and a high velocity, it is quite possible to have shocks occurring at other parts of the stroke as well as at the beginning, as shown by the following diagram :—

DIAGRAM SHOWING FOUR SHOCKS IN ONE STROKE OF PISTON.

Here the inertia line, M O N, cuts the pressure curve, A B C, in three points, K, L, and R; the result being that *four* shocks would occur during one stroke at these points.

If we wish to find the limits within which it will be advisable to keep the velocity, so as to avoid shocks at the beginning of the stroke, we have only to put $p_e = 0$, and $x = 0$ in equation (2), which thus gives us the limiting value of the velocity, V; that is—

$$0 = p_x - \frac{W V^2}{A g r}.$$

$$\therefore V = \sqrt{\frac{A g p_x r}{W}} \quad . \quad . \quad . \quad (3).$$

Example.—The stroke of an engine is 4 ft., the diameter of the cylinder is 20 in. Steam is admitted to the cylinder at a pressure of 30 lbs. per sq. in. above the atmosphere, the back pressure being 3 lbs. per sq. in.

Find the number of revolutions per minute which would produce a shock at the beginning of the stroke, the weight of the reciprocating mass being 1,256 lbs.

Here $p_x = 30 + 15 - 3 = 42$ lbs. from zero pressure.
$A = 3{\cdot}1416 \times 10^2 = 314$ square inches.
$r = 2$ feet.

Digitized by Google

Substituting these values in equation (3),

$$V = \sqrt{\frac{A\,g\,p_x\,r}{W}}$$

$$V = \sqrt{\frac{314 \times 32{\cdot}2 \times 42 \times 2}{1256}} = 26 \text{ feet per second.}$$

If the number of revolutions per minute be denoted by N, then, since

$$V = \frac{2\pi r N}{60},$$

$$\therefore N = \frac{60\,V}{2\pi r} = \frac{60 \times 26'}{2 \times 3{\cdot}1416 \times 2} = 124 \text{ fully.}$$

From this example we learn that, with a speed of 124 revolutions per minute, the backward force at the beginning of the stroke, due to the inertia of the moving horizontal parts, is equal in magnitude and opposite in direction to the pressure of the steam on the piston; consequently, a shock would be produced at the beginning of each stroke.

We now pass on to the more complex case wherein account is taken of *the effect of inertia on moving parts of a horizontal engine with connecting-rod of finite length.*

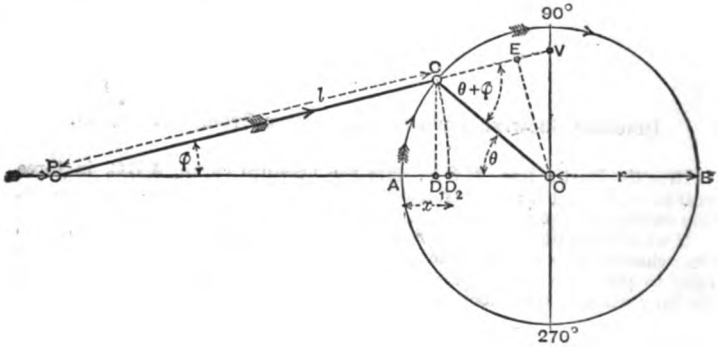

Ratio of Velocities of Piston and Crank.

To express v, the velocity of crosshead or piston, P, in terms of V, the velocity of crank-pin, C. Let the direction of the connecting-rod, PC, be produced to cut the vertical through, O, in the point, V. Then OCV is our triangle of velocities.

$$\begin{aligned} v &: V :: OV : OC, \\ &:: \sin OCV : \sin OVC, \\ &:: \sin OCV : \cos OPC, \\ &:: \sin(\theta + \phi) : \cos\phi. \end{aligned}$$

$$\therefore v = V \cdot \frac{\sin(\theta + \phi)}{\cos\phi} = V\,\frac{\sin\theta \cdot \cos\phi + \cos\theta \cdot \sin\phi}{\cos\phi},$$

(Dividing by cos ϕ.) $$v = V \cdot (\sin\theta + \cos\theta \cdot \tan\phi).$$

Digitized by Google

Since ϕ is always a small angle, we may write

$$\tan \phi = \sin \phi;$$

and if, l, be length of the connecting-rod in feet, we may express, l, in terms of, r, the radius of crank, by writing

$$l = n r.$$

Now, from the triangle, O C P, we have

$$\sin \phi : \sin \theta : : \text{O C} : \text{P C},$$
$$: : \quad r \quad : \quad l,$$

$$\therefore \sin \phi = \frac{r}{l} \cdot \sin \theta = \frac{\sin \theta}{n}.$$

Making these substitutions, in the last equation for v, we get

$$v = \text{V}\left(\sin \theta + \cos \theta . \frac{\sin \theta}{n}\right) = \text{V}\left(\sin \theta + \frac{\sin 2\theta}{2n}\right).$$

Differentiating this equation with respect to the time, t, we get the acceleration of the reciprocating parts—

$$\frac{dv}{dt} = \text{V} . \frac{d}{dt}\left(\sin \theta + \frac{\sin 2\theta}{2n}\right),$$

$$= \text{V}\left(\cos \theta + \frac{\cos 2\theta}{n}\right)\frac{d\theta}{dt};$$

$$\text{but V} = \frac{d}{dt} \cdot (\text{A C}) = r \cdot \frac{d\theta}{dt}.$$

$$\therefore \frac{d\theta}{dt} = \frac{\text{V}}{r};$$

$$\text{so that } \frac{dv}{dt} = \frac{\text{V}^2}{r}\left(\cos \theta + \frac{\cos 2\theta}{n}\right).$$

$$\therefore \text{F} = \frac{\text{W V}^2}{g r}\left(\cos \theta + \frac{\cos 2\theta}{n}\right),$$

$$\text{and } p_e = p_x - \frac{\text{W V}^2}{\text{A } g r}\left(\cos \theta + \frac{\cos 2\theta}{n}\right).$$

As before, we get for the equation of the inertia curve

$$p_a = \frac{\text{W V}^2}{\text{A } g r}\left(\cos \theta + \frac{\cos 2\theta}{n}\right),$$

which is no longer that of a straight line, but a curve of rather a complex character, being convex towards the origin and approximately a parabola. An example of this will be given further on.

In using the above equation to trace the inertia curve, we shall for simplicity of illustration merely determine the first and last ordinates, and the point where the curve cuts the line of abscissæ.

Thus, when $\theta = 0$, $\cos \theta = \cos 2\theta = 1$, and for first ordinate,

$$p_a = \frac{\text{W V}^2}{\text{A } g r}\left(1 + \frac{1}{n}\right);$$

Digitized by Google

when $\theta = 180°$, $\cos\theta = -1$, $\cos 2\theta = 1$, and last ordinate,

$$p_a = \frac{W V^2}{A g r}\left(-1 + \frac{1}{n}\right) = -\frac{W V^2}{A g r}\left(1 - \frac{1}{n}\right).$$

Where the inertia curve cuts the line of abscissæ, $p_a = 0$,

$$\text{i.e., } \left(\cos\theta + \frac{\cos 2\theta}{n}\right) = 0, \text{ or } 2\cos^2\theta + n\cos\theta = 1,$$

$$\therefore \cos\theta = \frac{\sqrt{n^2 + 8} - n}{4}.$$

The positive signs only being admissible.

Let x, as before, be any distance, AD_2, which the piston has travelled from beginning of the stroke; then, to express x in terms of θ, we have, from last figure,

$$\begin{aligned} x = AD_2 &= AD_1 + D_1D_2, \\ &= OA - OD_1 + PD_2 - PD_1, \\ &= r - r\cos\theta + l - l\cos\phi; \\ \therefore x &= r(1 - \cos\theta) + l(1 - \cos\phi), \end{aligned}$$

but $\sin\phi = \frac{\sin\theta}{n}$, and $l = nr$,

$$\text{also } \cos\phi = \sqrt{1 - \sin^2\phi}, = \sqrt{1 - \frac{\sin^2\theta}{n^2}}, = \frac{\sqrt{n^2 + \cos^2\theta - 1}}{n},$$

$$\therefore x = r\left\{n + 1 - (\cos\theta + \sqrt{n^2 + \cos^2\theta - 1})\right\}.$$

(See p. 99 for the graphic method of finding the distance x).

In using these equations, it must always be borne in mind that the cosine of an obtuse angle is negative—that is, for all values of θ, between 90° and 270°. To illustrate this, let us take the case of the engine mentioned in the last numerical example, but working with a connecting-rod 8 feet long, and making 84 revolutions per minute, the steam being cut off at ¼ stroke. To show the inertia curve and indicator diagram on the same base line and drawn to same scale, we have—

$$n = \frac{8}{2} = 4.$$

$$V = \frac{2\pi r N}{60} = \frac{2 \times 3{\cdot}1416 \times 2 \times 84}{60} = 17{\cdot}6 \text{ feet per second.}$$

$$\therefore \text{ initial ordinate } p_a = \frac{{}'1256 \times (17{\cdot}6)^2}{314 \times 32{\cdot}2 \times 2} \cdot \left(1 + \frac{1}{4}\right),$$

$$= 19{\cdot}23 \times \frac{5}{4} = 24{\cdot}03 \text{ lbs.}$$

$$\text{Final ordinate} = -19{\cdot}23 \times \frac{3}{4} = -14{\cdot}42 \text{ lbs.}$$

To find where the inertia curve cuts the base line, we have

$$\cos\theta = \frac{\sqrt{16 + 8} - 4}{4} = 0{\cdot}224.$$

Digitized by Google

$$\therefore x = 2\{5 - (0{\cdot}224 + \sqrt{15{\cdot}05})\},$$
$$= 2 \times 0{\cdot}897 = 1{\cdot}794 \text{ feet.}$$

Or half stroke 2 ft. — 1·794 ft. = 2·472 inches.

From this it appears that the piston is about 2⅞ inches from the middle of its stroke when the inertia curve cuts the base line.

NOTE.—In the drawing office of Messrs. Robert Napier & Sons, Glasgow, the curve is determined for every $\frac{1}{16}$th of the stroke, instead of for three points as we have roughly determined it here. By making a scale diagram of a connecting-rod and crank for a number of positions, the piston's position corresponding to known angles of the crank can be quickly found, and the value, $\cos\theta + \frac{\cos 2\theta}{n}$, calculated (for the other factor is constant). This not only gives the curve more exactly, but avoids the above calculation of finding the point at which the curve cuts the zero line. It is worth noting that if the curve is once drawn with care for any ratio of connecting-rod to crank per unit weight, and per revolution, then for the same ratio all other curves with different weights and revolutions can at once be obtained by simply increasing the ordinates in the proportion, $W V^2$.

The annexed figure shows the indicator and inertia diagrams for the example just worked out.

E D is the line of zero pressure of steam.
E F is the back pressure = 3 lbs.
F G is the line of abscissæ.

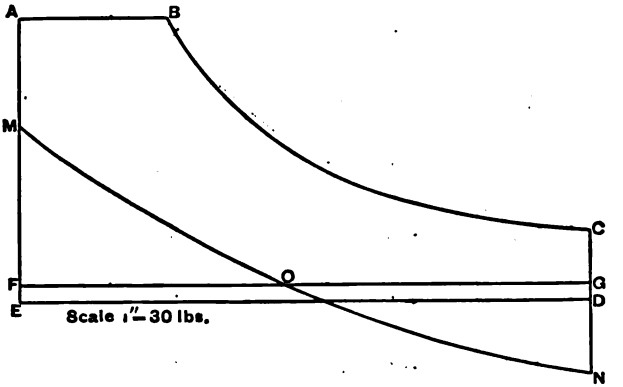

In plotting out a crank-effort curve, the pressures must be measured from the curve of inertia, M O N.

We are now in a position to obtain a more accurate expression for the tangential or turning force on the crank-pin. It has already been shown (page 159) that the tangential force,

$$T = P\frac{\sin(\theta + \phi)}{\cos\phi};$$

but, when inertia is to be taken into account, we must replace, P, the total pressure on the piston, by the resultant of, P, and F. Then,

$$T = (P - F)\frac{\sin(\theta + \phi)}{\cos\phi} = \left\{P - \frac{W V^2}{g r}\left(\cos\theta + \frac{\cos 2\theta}{n}\right)\right\}\frac{\sin(\theta + \phi)}{\cos\phi};$$

or, eliminating ϕ, as before, by writing $\frac{\sin(\theta + \phi)}{\cos\phi} = \sin\theta + \frac{\sin 2}{2}$

Digitized by Google

$$\therefore T = \left\{ P - \frac{W V^2}{g r}\left(\cos\theta + \frac{\cos 2\theta}{n}\right) \right\}\left(\sin\theta + \frac{\sin 2\theta}{2n}\right)^{*}.$$

To facilitate the drawing of crank-effort or inertia curves, the following table is appended:—

$\theta =$	$\cos\theta + \frac{\cos 2\theta}{n} =$	$\sin\theta + \frac{\sin 2\theta}{2n} =$
0°	$1{\cdot}000 + \frac{1}{n}$	$\cdot000 + 0$
18°	$\cdot951 + \frac{\cdot809}{n}$	$\cdot309 + \frac{\cdot294}{n}$
36°	$\cdot809 + \frac{\cdot309}{n}$	$\cdot588 + \frac{\cdot475}{n}$
54°	$\cdot588 - \frac{\cdot309}{n}$	$\cdot809 + \frac{\cdot475}{n}$
72°	$\cdot309 - \frac{\cdot809}{n}$	$\cdot951 + \frac{\cdot293}{n}$
90°	$\cdot000 - \frac{1}{n}$	$1{\cdot}000 + 0$
108°	$-\cdot309 - \frac{\cdot809}{n}$	$\cdot951 - \frac{\cdot293}{n}$
126°	$-\cdot588 - \frac{\cdot309}{n}$	$\cdot809 - \frac{\cdot475}{n}$
144°	$-\cdot809 + \frac{\cdot309}{n}$	$\cdot588 - \frac{\cdot475}{n}$
162°	$-\cdot951 + \frac{\cdot809}{n}$	$\cdot309 - \frac{\cdot294}{n}$
180°	$-1{\cdot}000 + \frac{1}{n}$	$\cdot000 - 0$

* By simple trigonometrical transformations this formula reduces to—

$$T = P\left(\sin\theta + \frac{\sin 2\theta}{2n}\right) - \frac{W V^2}{g r}\left(-\frac{1}{4n}\sin\theta + \frac{1}{2}\sin 2\theta + \frac{3}{4n}\sin 3\theta\right)$$

as far as the first power of n. This form of the expression is probably more suitable for calculations than that given above.

Digitized by Google

In what has preceded regarding the effects of reciprocation, we have assumed throughout that the engines were horizontal. In the case, however, of vertical or diagonal engines, the effect due to gravity must not be overlooked, especially if the engines are large.

For vertical engines, the weight, W, of the reciprocating parts must be added to the effective total pressure on the piston ($p_e \times A$), or subtracted from it, according as the piston is moving downwards or upwards.

If the engines are diagonal, we have to add or subtract, W . sin α, according as we are considering the down or the up stroke, where, α, is the inclination of the centre line of the cylinder to the horizon.

After carefully perusing the foregoing demonstrations, the student will be prepared to appreciate Mr. Imray's paper on "High Speed Motors," read before the Institution of Civil Engineers (see *Proc. Inst. C.E.*, vol. lxxxiii., 1886, and Lecture XVII. in former editions of this text-book), as well as other similar papers upon this important subject.

General Problem of Determining the Stresses Produced by a Heavy Body Moving along a Straight Line.—Since the stresses produced by the inertia of the moving parts is of such importance in engine design, it will not be out of place to consider here, briefly, the general problem of the stresses produced by a heavy body moving along a straight line according to any law of motion whatever. We shall treat the subject graphically.

In an engine, or any other machine where the moving parts are connected by a set of practically rigid links, the position of any one part can be determined from that of the others. For instance, the position of the valve is known when we know the position of the crank, and how far the engine is linked out. Thus, we can tell the position of our moving mass at any interval of time if we suppose the crank to turn uniformly.

The crank-circle must now be divided into a sufficient number of parts to determine the motion of the mass with great accuracy.

For simplicity we shall refer to the case of the slide valve, since it is of most frequent occurrence, but what is said applies equally to any other part. (See first the diagram on p. 169*a*.)

If the engine revolves once in a second, and the crank-circle is divided into 20 equal parts, then each of the intervals is traversed in $\frac{1}{20}$ of a second.

Now draw a base line, A B, and divide it also into 20 equal parts. These divisions will correspond with those into which we have divided the crank-circle, beginning at A, when the engine is at the end of the stroke. Then, at each $\frac{1}{20}$ of a second measure the distance by which the valve is displaced from any convenient fixed line in the engine, and lay it off, perpendicularly, at the proper division in A B, as at P. A smooth curve drawn through all the points so found will give the complete motion of the valve to the time base-line, A B. (Now refer to fig. next page as a part of fig. 169*a* to larger scale.)

At, P, draw a tangent, P T, to the curve so found. If the valve motion, instead of giving the curve, D P D, which we have found, gave the straight line, P M, we should have the displacement, N P, changing uniformly, or, in other words, a uniform velocity of valve motion; then, by drawing P M parallel to A B, we find the length, M T, which is the distance the valve would travel every $\frac{1}{20}$ of a second, that is the velocity of valve per $\frac{1}{20}$ second.

Just at, P, the curve coincides with the tangent, P T, and thus, M T, is the actual velocity of the valve at that moment per $\frac{1}{20}$ of a second. By drawing tangents at the various points, such as P, and measuring the quantities corresponding to M T, we can find the velocity of the valve at any time. Next lay off N Q = M T, and proceed similarly with all the other velocities thus found. Then draw a smooth curve, V Q V, through

Digitized by Google

points; this curve will be a curve of velocities of the valve. Of course, at the points where the tangents to the displacement curve are parallel to A B, the velocity is zero, and the curve, V V, cuts A B. A similar remark applies to the acceleration curve.

By drawing tangents to the velocity curve in the same fashion as we have done for the displacement curve, we get the rate at which the velocity of the valve is changing, that is, the acceleration of the valve. Thus, if Q t

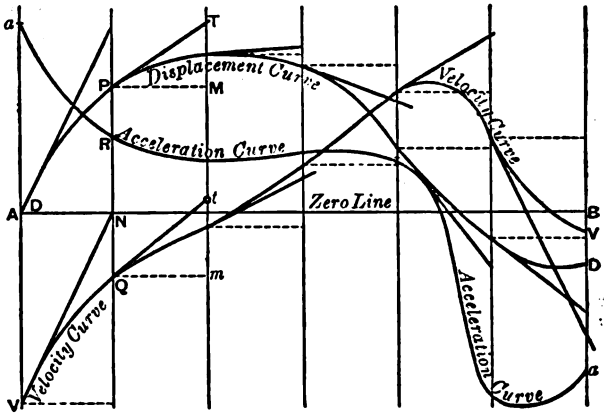

DIAGRAM ILLUSTRATING CONSTRUCTION OF DISPLACEMENT, VELOCITY, AND ACCELERATION CURVES FOR THE CASE OF AN ACTUAL SLIDE VALVE.

is the tangent at Q, and Q m is drawn parallel to A B, then, $m\,t$, will be the acceleration of the valve per $\frac{1}{10}$ second per $\frac{1}{10}$ second. We may complete the acceleration curve, $a\,a$, in the same way as we did the velocity curve.

Having got the acceleration of the valve, we can at once calculate the stresses due to its inertia. Measure all the ordinates, such as, N R, of the acceleration curve, according to the scale which gives the actual displacement, N P, of the valve in feet; this number will be the acceleration of the valve in feet per $\frac{1}{10}$ second per $\frac{1}{10}$ second, and 400 times this number will be the acceleration in feet per second per second. Call this, a, and let the weight of the valve = W; then—

$$\text{The stress due to the inertia of the valve} = S = \frac{W\,a}{g}.$$

S being in lbs. if W is in lbs., and in tons if W is in tons. This completely solves the problem.

In actually carrying out the construction on paper, it will be found of great importance to choose the scales of the time divisions on A B, and of the displacements, so that the maximum inclination of the tangents to A B are neither too near a right-angle, or too small, as in either case a small error in the determination of any point in one of the curves may give rise

Digitized by Google

to a large error in the succeeding curve. Indeed, to make the determination of the stresses accurate, the time intervals at which the displacements are measured should be small, and the scales of the curves comparatively large, and also all measurements taken with the greatest nicety, as errors introduced at first tend to increase themselves enormously. This does not show a defect in the graphical method, but points to a fact of the greatest importance in machine design. For it is a matter of every day experience that any want of rigidity in the gear actuating a moving part, by giving rise to a vibration of short period largely increases the stresses which would otherwise have to be dealt with.

Here, we have a small movement of short period superimposed on the proper movement of the valve or other working part, and this exactly corresponds to slight error in the determination of points in our diagram.

If, P M, had been drawn over a distance corresponding to $\frac{1}{m}$th part of a second, and then, M T, measured; and if, Q m, represented $\frac{1}{n}$th part of a second; a, the acceleration per second per second, would have been $= m\,t$, measured in feet, multiplied by $m \times n$. Also, if the engine, instead of revolving once per second, had revolved N times per second, the accelerations would have been

$$= N^2\,a,$$

and the stresses

$$= \frac{W\,N^2\,a}{g}.$$

It is obvious that the above method at once springs out of the ordinary determination of stress by differentiation. For if x is the displacement of valve in feet at time, t, in seconds, $\frac{dx}{dt}$ is the velocity of the valve in feet per second, and $\frac{d^2x}{dt^2}$ is the acceleration in feet per second per second, giving, of course, the stress

$$= \frac{W}{g} \cdot \frac{d^2x}{dt^2}.$$

But $\frac{dx}{dt}$ = tangent of inclination of the curve, D D, with, A B, at the point, P,

$$\text{or, } \frac{dx}{dt} = \frac{M\,T}{P\,M} = \frac{M\,T}{\frac{1}{20}} = 20 \times M\,T.$$

Thus, the first differentiation gives a curve, all the ordinates of which are = the ordinates of the velocity curve × 20.

Similarly, $\frac{d^2x}{dt^2}$ is the tangent of the angle which the geometrical tangent to the curve given by $\frac{dx}{dt}$ makes with A B, and is thus = 20 × [illegible] giving rise to the same value of the acceleration as we found above.

Digitized by Google

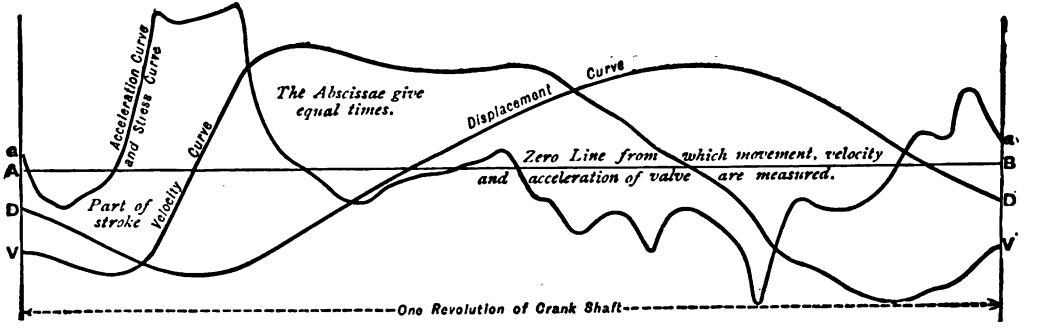

DIAGRAM OF DISPLACEMENT, VELOCITY, ACCELERATION, AND STRESS CURVES FROM AN ACTUAL CASE OF A SLIDE VALVE.

The above diagram has been reduced by photography from a large scale drawing (fully 4 feet long), plotted out by Mr. John H. Macalpine by the method just described for Dr. A. C. Kirk, in the drawing office of Messrs. Robert Napier & Sons, Glasgow. Each curve was determined with all possible accuracy from nearly 100 points. The Stress Curve shows how very severe, irregular, and sudden are the stresses which the spindle, for a large slide, has to withstand. It is therefore very important to determine these stresses with all possible accuracy, in order that they may be borne by rods and guides, &c., of sufficient strength and stiffness, without unduly increasing the dimensions of the various parts.

Digitized by Google

LECTURE XVII.—QUESTIONS.

1. In a double-acting engine the mean pressure on the piston is 4 tons and the length of the stroke 18 inches, what is the mean pressure which can be taken from the run of the fly-wheel, the estimated diameter of which is 8 feet? *Ans.* 1069 lbs. (about).

2. The crank of a steam engine is 2 feet long, and the mean tangential force acting upon it is 17,000 lbs., what is the mean pressure of the steam upon the piston of the engine during each stroke? *Ans.* 26703·6 lbs.

3. In a direct-acting engine the diameter of the cylinder is 17 inches, and the mean pressure of the steam 60 lbs., the crank being 12 inches long, what is the mean pressure on crank in the direction of its motion? *Ans.* 8670.

4. Explain the manner in which the reciprocating motion of the piston in a locomotive engine is converted into the rotatory motion of the crank shaft. What are the dead points? Show by the principle of work that there is no loss of power by the intervention of the crank, friction being disregarded.

5. Explain the method of representing in a diagram, the work done during one revolution of the crank of an engine by setting off ordinates representing the tangential efforts on the crank pin.

6. In a direct-acting engine the crank and connecting-rod are as 1 to 6. Find an expression for the tangential pressure on the crank pin in any position. Construct an approximate diagram of work done upon the crank during the stroke, and give a sketch of the same, (1) when there is a single cylinder, and (2) when there are two cylinders working cranks at right angles.

7. In a horizontal direct-acting engine you are required to find an expression for the tangential force upon the crank pin in any given position of the crank. Example—The lengths of the crank and connecting-rod being 1 and 6 respectively, and the pressure on the steam piston being 2,000 lbs., estimate the tangential force on the crank when in a vertical position. Find also the vertical force acting upon the crank shaft. *Ans.* 2,000; 338.

8. In a direct-acting horizontal engine the length of the crank 1 foot and that of the connecting-rod is 5 feet. When the crank is vertical the pressure of the steam on the piston is 4,000 lbs.; find the thrust along the connecting-rod, and the pressure on the guide bars at that point of the stroke. *Ans.* 4083; 816·5.

9. If the cylinder of a locomotive be 20 inches in diameter with a stroke of 2 feet, and the diameter of the driving wheel be 6 feet, find the tractive force exerted by the engine for each pound of pressure per square inch on the piston. *Ans.* 66·6.

10. Explain the effects of the inertia of the reciprocating parts in a reciprocating engine, and, taking a particular case, work out a crank-pin stress diagram.

11. Draw an indicator diagram of a Corliss (or some engine with instantaneous cut-off), in which the cut-off took place at ¼ stroke. From this construct a diagram of crank effort (1) for a single cylinder engine, (2) for double cylinder engine with cranks at right angles.

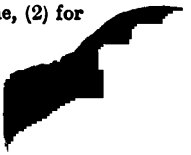

Digitized by Google

12. The crank of an engine has a radius of 18 inches, the connecting-rod is 6 feet long, and the number of revolutions made by the engine is 80 per minute. Find graphically or otherwise the velocity of the piston in feet per second when the crank has passed through an angle of 30° from the dead centre during the forward stroke. (*Adv. S. and A. Exam.*, 1887.)

13. In a direct-acting horizontal engine, where the connecting-rod works between guides, the connecting-rod is five times as long as the crank. the pressure on the piston when the crank is vertical being 1,250 lbs.; find the thrust on the slide bar, neglecting friction, and indicate the direction in which it acts. Does the direction of the thrust change during any part of the revolution? (*Adv. S. and A. Exam.*, 1888.)

14. In a direct acting engine the crank is 2 feet in length, and the connecting-rod is 8 feet; find the distance in inches of the piston from the middle point of its stroke, when the crank is at 90° from a dead centre. (*Adv. S. and A. Exam.*, 1889.) Answer this by calculation as well as graphically. *Ans.*

15. A steam engine with a cylinder of D inches in diameter, receives steam at 80 lbs. absolute pressure per square inch, and the cut-off is at $\frac{1}{3}$ of the stroke. Find an expression for the diameter of the cylinder of another engine with the same stroke and piston speed which develops the same horse-power as the first engine, but which cuts off the steam at $\frac{1}{4}$ stroke. What would be the relative maximum stresses on the crank pin and crank shaft of the two engines when both transmit the same power, the inertia of the reciprocating parts and the obliquity of the connecting-rod being neglected? (*Hons. S. and A. Exam.*, 1889.)

Digitized by Google

Digitized by Google

LECTURE XVIII.

CONTENTS.—Stationary Land Engines—Horizontal Non-condensing Steam Engine—Horizontal Condensing Steam Engine—Compound Non-condensing Steam Engine with Locomotive Boiler.

HAVING discussed in the previous seventeen lectures, the early history of the steam engine up to the beginning of this century, the nature of heat and how it is measured, the generation of steam, as well as its action and distribution in non-condensing, condensing, compound, and multiple expansion engines, we now enter upon the description of a few selected examples of steam engines and boilers of recent manufacture, which have been proved to be of excellent design and workmanship.

Within the last eighty years there has been, and there is at present in use, a multitude of styles and types of engines, each more or less specially adapted for different classes of work, such as pumping water from mines, raising water for the supply of towns, draining lands, blowing air into smelting furnaces, driving agricultural machinery, steam cranes, and such like, all of which it is impracticable to treat of fully in this work; for it is impossible in the few remaining lectures at our disposal to do more than indicate the general design with some of the more important details, of the various examples which we have selected. In some instances, we shall give the actual specifications from which the engines were made, as we know from our own experience, that an apprentice or young engineer (unless he is particularly fortunate and happens to be in the drawing office) has little or no chance of perusing and studying specifications, for these things are, as a rule, carefully locked past and treated as private by the heads of firms. We shall also have occasion to devote two lectures to the rise and progress of the Marine Engine, and part of another to that of the Locomotive Engine.

In the present lecture we shall describe three styles of fixed or stationary horizontal land engines, designed by Messrs. Marshall, Sons & Co., Limited, of Gainsborough, which firm has a high reputation for excellence of workmanship and design, brought about by many years of experience and constant attention to special requirements and to [illegible]

Digitized by Google

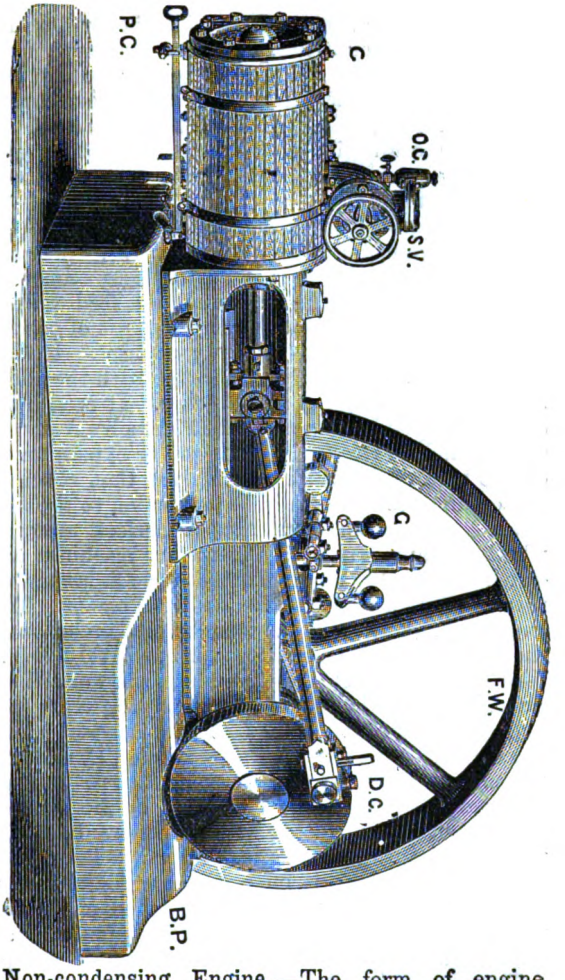

MARSHALL'S HORIZONTAL NON-CONDENSING STEAM ENGINE.

S V for Stop valve.
C " Cylinder.
O C " Oil cup.
P C " Pet cocks.

B P for Bed plate.
D C " Disk crank.
G " Governor.
F W " Fly-wheel.

Horizontal Non-condensing Engine.—The form of engine which is illustrated above, is specially adapted for driving small works, or dynamo machinery, where economy of coal and of water is not of the first or of vital consideration, but where uniform speed, freedom from breakdown, and simplicity of construction are of great consequence. It is usually made in sizes varying from 36 to 105 indicated horse-power, and supplied v

Digitized by Google

steam from an ordinary Lancashire boiler (see index), or from a boiler of the multitubular locomotive type (see index), at a pressure of 40 to 80 lbs., according to circumstances. As the general construction of this engine is very similar to that of the non-condensing parts in the next set of illustrations, of which we shall give a complete descriptive specification, we need only refer the student to the figure on the last page and the index of parts.

Horizontal Condensing Engine.—This style of engine is much used to drive factories and engine works, where a uniform speed is necessary, and where it is advisable to economise fuel by condensing the steam and returning the feed water warm to the boiler, but where the condensing water is of good quality admitting of the adoption of the jet condenser. It virtually consists of the engine previously illustrated with the addition of a condenser, an air pump, and feed pump. It is also fitted as in the case of the previous engine with Hartnell's Automatic Expansion Gear, which so regulates the cut-off or expansion valve (working on the back of the main slide valve), that steam is admitted to the cylinder in almost direct proportion to the load to be overcome. This ensures an almost perfect uniformity of speed, whether many or few of the factory machines are set to work, or whether few or many of the electric lights are in circuit when these engines are applied to driving dynamos. The construction and action of this engine will be best understood by following the drawings and specification for one of 80 I.H.P.

General Construction.—The engine is erected on a heavy bed-plate, B P, of hollow girder pattern, truly planed on the underneath surface. This bed-plate is arranged so as to form at one end the front cover for the cylinder, C, and at the other end the main bearing for the crank shaft, C S. Sliding surfaces for the cross-head, C H, are embodied in the same casting. The crank shaft is constructed with a disk crank, D C, and a pin for the attachment of the connecting-rod, C R. The outer bearing for the crank shaft is on a separate foundation with plummer block, P B. Sufficient room is afforded on the crank shaft by the side of the fly-wheel, F W, for the application of a pulley to give off the whole or a portion of the power if required.

The engine in all its parts is of ample strength for working with steam supplied at 80 lbs. pressure, and of developing 80 indicated horse-power at 70 revolutions per minute, with a cut-off at $\frac{3}{8}$ stroke, and a mean pressure of 58 lbs. in the cylinder. When supplied with dry steam, the average consumption of feed water in the form of steam is 25 lbs. an hour per indicated horse-power.

Digitized by Google

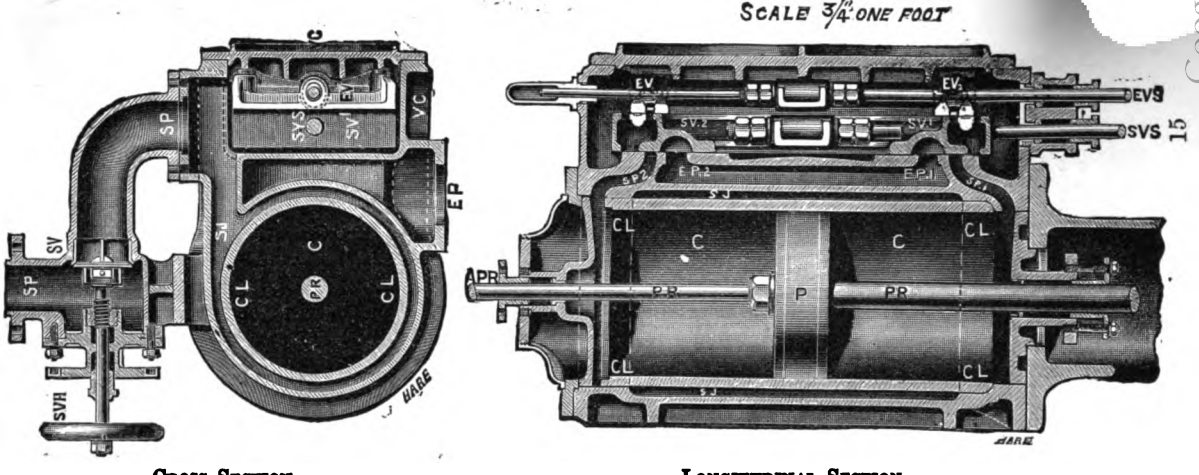

CROSS SECTION. LONGITUDINAL SECTION.

Cylinder and Slide Valves.—The cylinder, C, is of cold blast iron, with a steam jacket, S J. The working cylinder barrel or cylinder liner, C L, is of special hardness, cast separately, and securely forced into the main casting of the cylinder. This liner is truly bored out to a diameter of 14½ inches, the stroke of the piston, P, being 30 inches. The main slide valves, S V_1, S V_2, as well as the expansion valves, E V_1, E V_2, are all of the same class of iron as the cylinder, in order to insure uniformity of wear. Both the slide valve spindle, S V S, and the expansion valve spindle, E V S, are of steel.

In the cross section, the main steam and exhaust pipes are marked respectively, S P, and E P, while

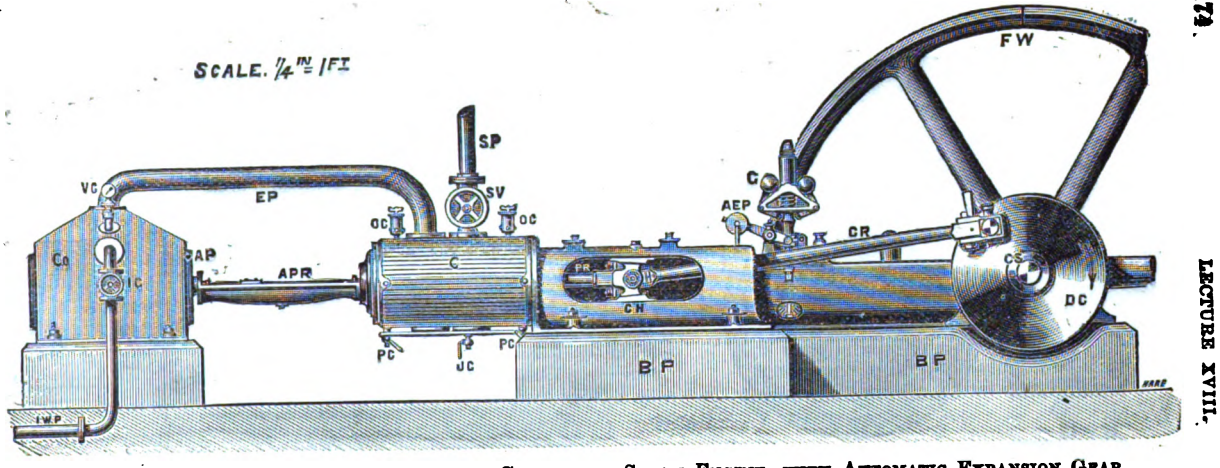

SIDE ELEVATION.—MARSHALL'S HORIZONTAL CONDENSING STEAM ENGINE, WITH AUTOMATIC EXPANSION GEAR.

INDEX TO SIDE ELEVATION AND PLAN.

S P	for Steam pipe.	C	for Cylinder.	Co	for Condenser.
S V	,, Stop valve.	J C	,, ,, jacket cocks.	I C	,, Injection cock.
V C	,, Valve casing.	P C	,, ,, pet cocks.	I W P	,, ,, water pipe.
O C	,, ,, ,, oil cups.	E P	,, ,, exhaust pipe	D P	,, Discharge pipe
E V S	,, Expansion valve spindle.	A P	,, Air pump.	V G	,, Vacuum gauge.
V S	,, (Main) valve spindle.	A P R	,, ,, ,, rod.		

Digitized by Google

INDEX TO SIDE ELEVATION AND PLAN—*Continued.*

B P	for Bed plate.	E	for Eccentric for slide valve.
P R	,, Piston-rod.	E E	,, Expansion eccentric.
C H	,, ,, ,, Crosshead.	A E P	,, Automatic expansion gear pulley.
O C	,, Oil cup for ,,	G	,, Governor.
C R	,, Connecting-rod.	G B	,, Governor belts.
D C	,, Disk crank.	G P	,, Governor pulleys.
C S	,, Crank shaft.	F P E	,, Feed pump eccentric.
F W	,, Fly-wheel.	F P	,, Feed pump.
P B	,, Plummer block.		

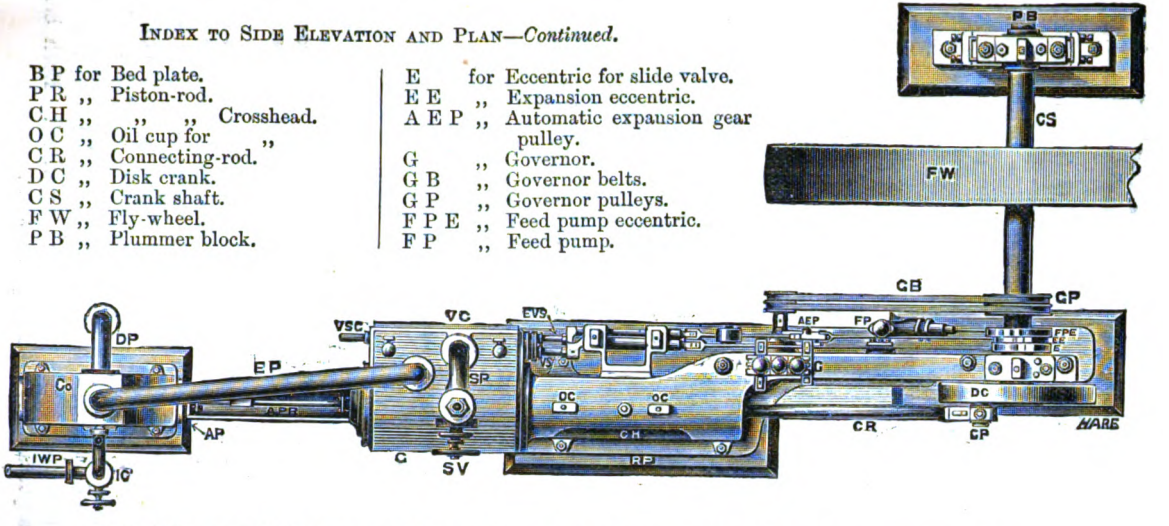

PLAN,—MARSHALL'S HORIZONTAL CONDENSING STEAM ENGINE WITH AUTOMATIC EXPANSION GEAR.

Digitized by Google

in the longitudinal section, the two steam and two exhaust ports close to the main slide valves, are marked respectively, S P_1, S P_2, and E P_1, E P_2.

Automatic lubricators or oil cups, O C (see general elevation and plan), are fixed into the valve casing, V C, so as to thoroughly lubricate the working parts of the slide valves, and the oil being carried forward with the steam, the piston is thereby also lubricated. An efficient drain cock, J C, for draining the steam jacket, and the valve chest as well as drain or pet cocks, P C, for the cylinder barrel are provided. The cylinder is lagged with teak, held in position by brass screws.

Stop-Valve Chest.—The steam stop-valve chest containing the stop valve, S V, which admits steam from the boiler to the slide valve casing, V C, and steam jacket, S J, is shown in section in the cross section of the cylinder. It is bolted to the valve casing in a convenient position for draining the main steam pipe, S P. The stop valve is a wing valve with a suitable seat, both of gun-metal, and is fitted with a brass spindle and screw, kept steam tight by a stuffing-box with brass gland and studs. On the outer end of the spindle is fixed the stop valve handle or wheel, S V H, whereby the attendant can cut off or admit more or less steam at pleasure from the engine.

Piston.—The piston, P, is made of cast-iron, fitted with L, shaped cast-iron rings, and steel internal spring to compensate for wear.

Piston-Rod.—The piston-rod, P R, and air-pump rod, A P R, are of steel, the former being 2¼ inches diameter. They are fixed to the piston by a simple cone and nut.

Crosshead.—The crosshead, C H, is of the best malleable iron, finished bright, and has large adjustable bearing surfaces to compensate for wear. It is firmly fixed to the piston-rod, and is provided with a steel gudgeon for attaching it to the connecting-rod. The crosshead guides are of the circular bored type.

Connecting-Rod.—The connecting-rod is of wrought-iron turned and polished. It is fitted with adjustable brasses at both ends as shown.

Crank Shaft.—The crank shaft is of steel, 5½ inches diameter at the bearings. A polished cast-iron disk properly counter-weighted and fitted with a steel crank pin, is forced on to one end of the crank shaft by hydraulic pressure. The crank shaft is supported by two extra long gun-metal bearings, the crank bearing being sustained directly by the engine bed plate, B P, while the outer one is fitted into a plummer block, P B, placed on a separate foundation outside the fly-wheel. Both bearings are made adjustable to follow up the wear.

Digitized by Google

Fly-wheel.—The fly-wheel is of cast-iron, 11 feet in diameter, and 14 inches wide on the face, with arms of strength proportionate to the weight of the rim and the stresses brought to bear on it while working. It is usually turned with the necessary curvature on the periphery so as to receive a driving belt. The boss is bored out and key-wayed to suit the crank shaft. The engine is usually adjusted so that the top part of the fly-wheel revolves from the cylinder unless otherwise specified for.

Governor and Automatic Expansion Gear.—This arrangement consists of (see first the general views, pp. 171, 174, 175) the governor, G, driven from two governor pulleys, G P, keyed to the crank shaft, with two belts from them, G B, to the two automatic expansion gear pulleys, A E P, which are keyed to the same spindle as the driving pinion, D P (see the accompanying figure). This pinion, D P, gears with another one

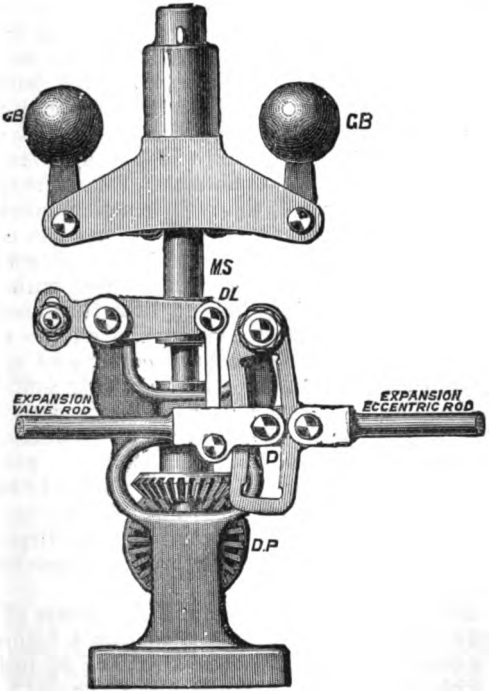

HARTNELL'S GOVERNOR, WITH AUTOMATIC EXPANSION GEAR.

Digitized by Google

keyed to a vertical spindle, on the other end of which is an arrangement for supporting the two governor balls, G B, G B, fixed to bell crank levers, the whole being rotated along with the vertical spindle. The inner ends of the two bell crank levers, bear on a strong spiral spring, contained in or above the upper extension of the metal tube or sleeve, M S. On the lower end of this metal sleeve is fixed a double collar freely engaged by a forked lever, suspended from which is a drag link, D L, whose lower end is attached to the expansion valve rod. The end of the expansion valve rod engages a die-block, D, which may be pulled up or pushed down throughout the length of the curved link, L, to the centre of which is attached the expansion eccentric rod, whose other end is strapped to the expansion eccentric, E E, keyed in position on the crank shaft.

Consequently, whenever the speed of the engine *exceeds* the normal speed for which it has been set to run at, the two governor balls fly outwards by the extra centrifugal or tangential force, compressing the spiral spring, lifting the metal sleeve, M S, drag link, D L, and expansion valve rod with the die-block, D, towards the upper end of the curved link, L, thus diminishing the travel of the expansion valve, and cutting off the steam earlier from the cylinder; which reduces the power and speed of the engine again to the normal. When the speed of the engine *falls below* the normal, the reverse action takes place, for then the tension of the spiral spring overcomes the compressive pressure of the bell crank levers, and presses down the metal sleeve, drag link, and expansion valve rod with die-block, towards the lower end of the curved link, thus increasing the travel of the expansion valve, and cutting off the steam later from the cylinder; which increases the power and speed of the engine again to the normal. In this way, only sufficient steam is admitted to the cylinder to develop the power required for the load in circuit, and to maintain an approximately uniform speed of from 2 to 5 per cent. above or below the normal speed, under considerable and frequent variations of load; and further, steam is economised by doing so, while the ordinary but less precise acting throttle valve arrangement is dispensed with. All the working parts of this gear are case-hardened and the pins are of steel.

Feed Pump.—The feed force pump, F P, consists of a cast-iron barrel, truly bored out to a diameter to suit a hollow plunger, 3 inches in outside diameter, with a stroke of $3\frac{1}{8}$ inches. It is supplied with the necessary stuffing box, brass-bushed gland and studs, suction and delivery valves with seats, all of gun-

Digitized by Google

metal (respectively connected by pipes to the condenser hot well and to the boiler as required), and a large cast-iron air vessel. The pump is worked by an eccentric, F P E, keyed to the crank shaft along side of the expansion eccentric.

Condenser and Air Pump.—The condenser, Co, consists of a strong cast-iron box of ample size, bolted to and resting upon a cast-iron sole placed behind the steam cylinder. The cast-iron exhaust pipe, E P, joins the exhaust port of the cylinder, and the top of the condenser at its centre. Immediately underneath the latter end of the exhaust pipe, and inside the condenser, is fixed a perforated pipe or rose, leading from the injection cock, I C, and injection water pipe, I W P, which is $2\frac{1}{4}$ inches internal diameter. An ordinary horizontal double-acting air pump with brass barrel $4\frac{3}{8}$ inches internal diameter is fixed in the centre of the condenser. This pump which has the full stroke of engine, is fitted with a brass plunger and air-pump rod, A P R, $1\frac{1}{4}$ inches diameter, worked direct from the back end extension of the piston-rod as shown. India-rubber suction and delivery valves with brass seating are fixed at each end of the air pump, with a discharge pipe $4\frac{1}{2}$ inches diameter leading from the delivery valves to the hot well. A vacuum gauge, V G, is fitted to the condenser on the same side as the injection cock.

The following table gives the general dimensions, speeds, and horse-powers of such engines:—

Dimensions of Engine.				Revolutions per Minute.	Power.				
Cylinder.		Fly Wheel.			Nominal Horse-Power.	Indicated Horse-Power.			
						Most economical Load.		Maximum Load.	
Diam.	Stroke.	Diam.				Boiler Pressure 60 lbs.	Boiler Pressure 80 lbs.	Boiler Pressure 60 lbs.	Boiler Pressure 80 lbs.
In.	In.	Ft.	In.						
11	22	7	2	96	12	30	36	42	48
12	24	7	9	88	14	35	42	49	56
13	27	9	0	78	16	40	48	56	64
$14\frac{1}{2}$	30	11	0	70	20	50	60	70	80
16	33	12	0	65	25	62	75	87	100
$17\frac{1}{2}$	36	13	0	60	30	75	90	105	1[illegible]
19	36	13	0	60	35	87	105	122	1[illegible]

Digitized by Google

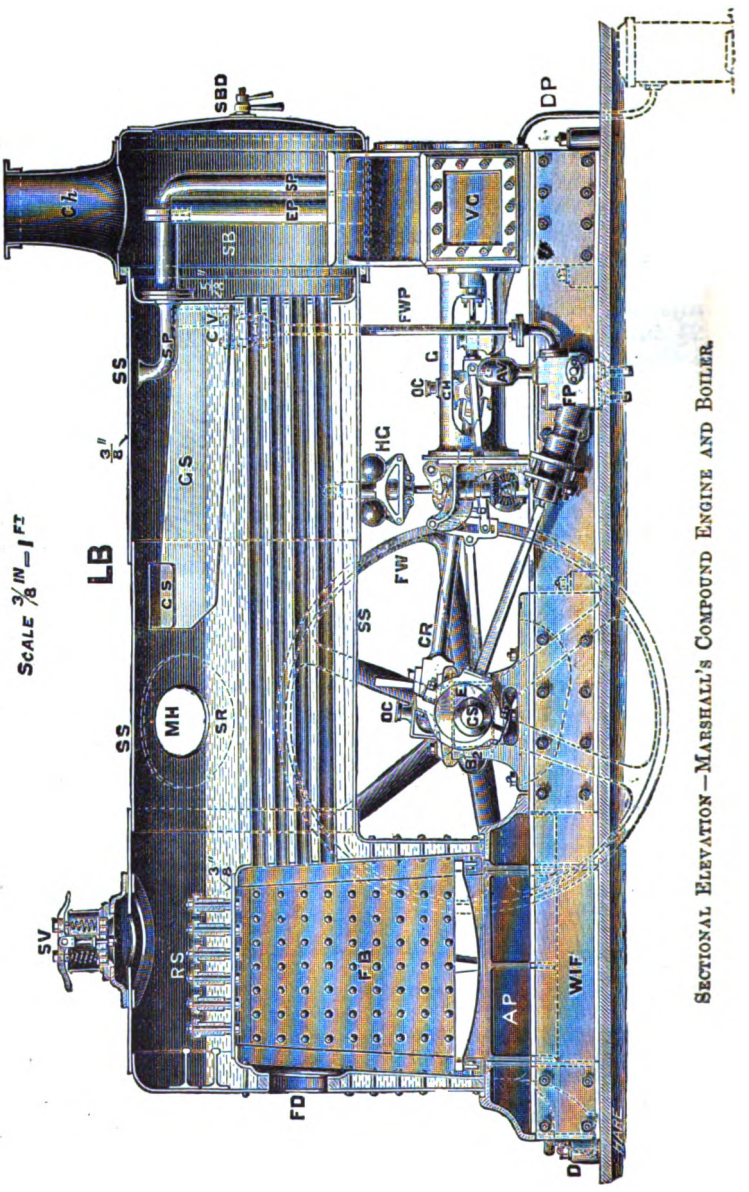

SECTIONAL ELEVATION—MARSHALL'S COMPOUND ENGINE AND BOILER.

Digitized by Google

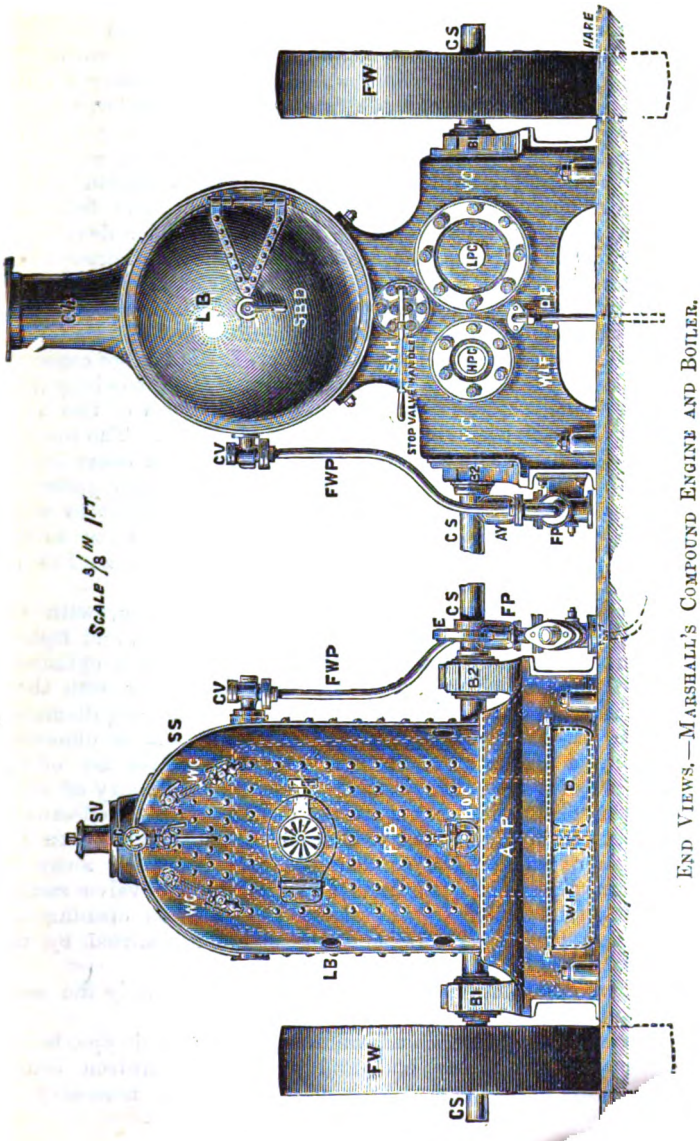

END VIEWS.—MARSHALL'S COMPOUND ENGINE AND BOILER.

Digitized by Google

Compound Non-Condensing Engine and Boiler.—This type of combined engine and boiler is very complete and compact. It is, therefore, becoming very popular for driving works and electric light machinery, where want of space or other circumstances prevent the use of a separate engine and boiler. Steam can be raised in this locomotive type of boiler in a very short time, and, owing to the large steam space and heating surface, it keeps steam amply supplied when the engine is working at full power throughout a long and continuous run. The following descriptive specification is for an engine and boiler developing under ordinary circumstances about 50 indicated horse-power, by Messrs. Marshall, Sons & Co., of Gainsborough.

General Construction.—The engine is of an improved construction, mounted on a wrought-iron framing, W I F, underneath a Locomotive Multitubular Boiler, L B, of large capacity, having a steel shell, S S, and a fire-box, F B, of bowling iron. The smoke-box, S B, is bolted to the top flanges of the high- and the low-pressure cylinders, H P C and L P C. The fire-box end rests on a neat ash-pan, A P, fitted with a door, D, for regulating the draught. The cylinders are steam jacketed, and the whole engine is of extra strength throughout to withstand a continuous working steam pressure of 140 lbs. to the square inch, developing 48 indicated horse-power, at 155 revolutions per minute.

Cylinders.—The cylinders are of cold blast iron, with the working barrels of special hardness, cast separately, and tightly forced into the main casting of the steam jacketed cylinders. The cylinders are covered with hair felt cased over with sheet iron. The high-pressure cylinder, H P C, is 8 inches diameter, and the low-pressure cylinder, L P C, is $12\frac{3}{4}$ inches diameter, each with a stroke of 14 inches. The slide valves are of the same class of iron as the cylinder to insure uniformity of wear. The steam chest and jackets are arranged so as to be effectually drained in a similar manner to that shown and described in the last style of engine, the condensed steam being led away by the drain pipe, D P. Steam is admitted to the valve casing, V C, from the boiler by the steam pipe, S P, on opening the stop valve handle, S V H, and the steam is emitted by the exhaust pipe, E P, up the chimney, Ch.

Pistons, Piston-Rods, and Crossheads are of precisely the same type as described in the last style of engine.

Guides.—The guides, G, are of the circular bored type, bolted to the cylinders at one end, and to the wrought-iron bridge plate at the other end. It is fitted with the necessary oil cup, O C.

Digitized by Google

Connecting-Rods.—The connecting-rods, C R, are of the best scrap iron, turned and polished, and fitted with large adjustable bearings at each end.

Crank Shaft.—The crank shaft, C S, is made of steel in one piece, without weld, and of sufficient length to take on the fly-wheel, F W, on either end as may be required. It is carried on long gun-metal bearings, B 1, B 2, firmly bolted to the wrought-iron framing, W I F. These bearings are made adjustable horizontally, to follow up the wear.

Fly-wheel.—The fly-wheel, F W, is 5 ft. 6 in. diameter, 9½ in. wide on face. It is constructed exactly in the same way as in the last style of engine.

Governor and Automatic Expansion Gear are applied precisely as in the last style of engine, but to the high-pressure cylinder engine only. It is marked, H G, for Hartnell's Governor.

Feed Pump.—A continuous action force pump, F P, with an air vessel, A V, and worked by an eccentric, E, keyed to the crank shaft is bolted to the side of the engine frame. This pump plunger, suction, delivery valves and taps are all of gun-metal, as well as the check valve, C V, fixed to the side of the boiler, and connected to the pump by the copper feed water pipe, F W P.

Boiler.—The boiler, L B, is of the locomotive multitubular type, lagged and cased over with sheet iron the whole length. It is of ample capacity for generating and maintaining a continuous supply of steam for the engine when developing full power. The internal fire-box is of suitable dimensions for burning either coal or wood as fuel, and strongly stayed at the ends and sides by screwed stays, and at the top by deep roofing stays, R S. All the boiler plates are planed on their edges, and riveted together by hydraulic machinery. The longitudinal seams are double riveted, and the boiler throughout is of sufficient strength to withstand a continuous working pressure of 140 lbs. to the square inch. Long gusset stays, G S, are riveted between the smoke-box end and the main steel shell, S S. There are 36 high pressure lap-welded iron boiler tubes, 2½ inches external diameter, extending between the fire-box, F B, and the wrought-iron smoke-box, S B. This smoke-box is fitted with a suitable smoke-box door, S B D, furnished with a strap, hinges and fasteners. The firing door, F D, furnace bars, and man-hole, M H, are fitted with external strengthening rings, S R. Two spring loaded safety valves, S V, of ample capacity, water-gauges, W G, W G, with gun-metal fittings, two gauge cocks, steam pressure Bourdon gauge, P C, gun-metal blow-off cock, B O C, are provided, as well as a fusible plug in the crown of the fire-box, and a straight chimney, Ch, of wrought-iron 8 feet long.

Digitized by Google

Indicator Diagrams.—The following set of diagrams were taken from engines made in accordance with the foregoing specification and the drawings from which those on pp. 180, 181, were reduced, where

Boiler pressure	=	140 lbs. on square inch.
Diameter of H.P. cyl.	=	8 inches.
Cut-off in "	=	$\frac{1}{4}$ stroke.
Clearance "	=	$\frac{1}{12}$ of its volume.
Diameter of L.P. cyl.	=	$12\frac{3}{4}$ inches.
Cut-off in "	=	$\frac{1}{2}$ stroke.
Clearance "	=	$\frac{1}{13}$ of its volume.
Number of revolutions	=	155 per minute.

The back end is the full line diagram, and the front end the dotted line.

FROM HIGH-PRESSURE CYLINDER.

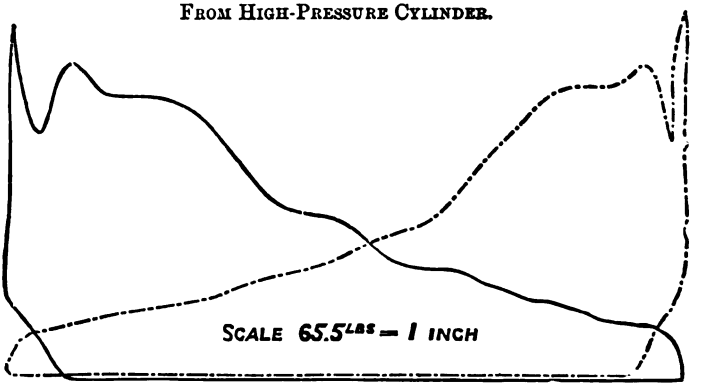

The irregular line on admission is caused by the indicator not being suited to such a high speed as 155 revolutions per minute.

FROM LOW-PRESSURE CYLINDER.

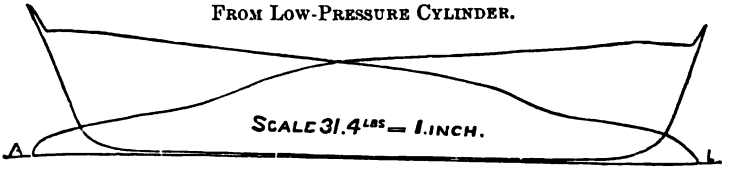

The exhaust line closely coincides with the atmospheric line. See question on next page, which should be done by all advanced students.

The following table gives the general dimensions of cylinders, fly-wheels, and the speeds of these engines for different horse-powers :—

Digitized by Google

Nominal Horse-Power.	Cylinders.		Stroke in Inches.	Revolutions per Minute.	Diameter of Fly-wheel.		Indicated Horse-Power, given off with Economy.
	High Pressure Diameter in Inches.	Low Pressure. Diameter in Inches.			Ft.	In.	
8	5½	9	12	180	4	0	26
10	6½	10½	14	155	5	0	33
12	7	11½	14	155	5	0	40
16	8	12¾	14	155	5	6	52
20	9	14	16	135	6	0	65
25	10	16	18	120	7	0	80
30	11	17½	18	120	7	0	95
40	13	21	24	90	8	0	130

Coupled Compound Horizontal Fixed Condensing Engine, designed and constructed by Messrs. Robey & Co., of Lincoln, and fitted with the Richardson & Rowland Patent Automatic Trip Expansion Gear.

Adapted for, &c.—This type of engine, as illustrated, is specially designed and adapted for driving electric lighting machinery, large factories, mills, &c., where regularity of speed with varying loads, as well as high efficiency in the economy of fuel, is necessary.

Illustrations.—The illustrations are taken from the engine which was employed in the Electric Light Department of the International Exhibition, Glasgow (1888), for driving the dynamos on the north side. It did its work without a single hitch. This engine is now fitted at Messrs. J. & G. Thomson's, of Clydebank, for driving their ship-yard machinery and saw mill, &c.

Fig. 1 (*A*), shows a front elevation, (*B*), plan, and (*C*), end elevation; Fig. 2, longitudinal and cross sections through high-pressure cylinder; Fig. 3, enlarged cross section through high-pressure cylinder at steam admission and exhaust valves; and Fig. 4, an improved form of crosshead and gudgeon pin.

Cylinders and Cut-off.—The cylinders, which are both steam-jacketed, are respectively 18¼″ and 30″ in diameter, with a stroke of 40″. Each cylinder is fitted with the trip valve gear, the cut-off on the high-pressure cylinder being capable of being varied by the governor from *nil* to three-quarters of the stroke, whilst the cut-off on the low-pressure cylinder is variable by hand, and when the engine is running.

Digitized by Google

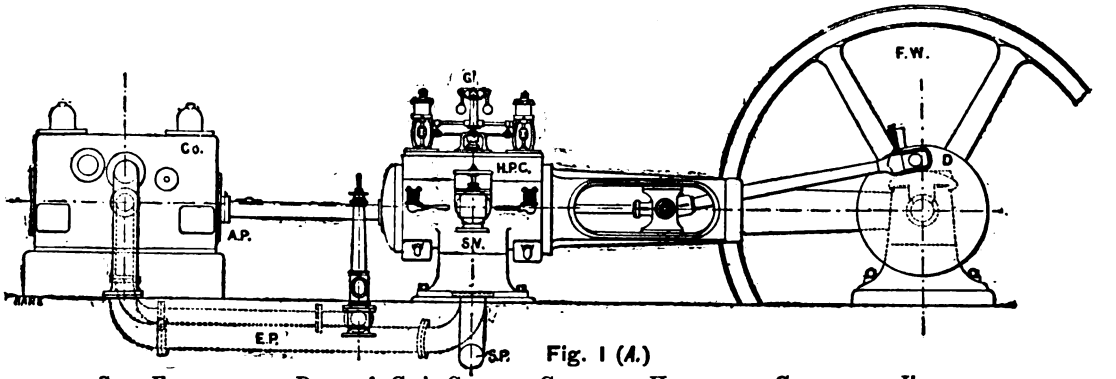

Fig. 1 (*A.*)

SIDE ELEVATION OF ROBEY & CO.'S COUPLED COMPOUND HORIZONTAL CONDENSING ENGINES.

Revolutions.—The engines are speeded to give 63 revolutions per minute at an initial pressure of 100 lbs. steam per square inch, and transmit their power (400 I.H.P.) from a flywheel, **F.W.**, 13′ diameter, 24″ wide, and seven tons in weight.

Steam and Exhaust Valves.—Both high- and low-pressure cylinders, **H.P.C.** and **L.P.C.**, have independent admission valves, **A.V.**, arranged on the top, and exhaust valves, **E.V.**, fitted to the bottom of the cylinders (see Figs. 2 and 3). The former consists of double-beat Cornish equilibrium valves fitted to each end of the cylinders, so as to get the shortest possible steam passage, thus enabling the engine to work at all times with an initial pressure as nearly approaching that of the boiler as possible.

The Admission Valves on the high-pressure cylinder are under the direct influence of the governor.

The Exhaust Valves, **E.V.** (Fig. 3), consist of a special arrangement of Corliss slide valve, which gives a quick opening to the exhaust with a very small travel. They are placed underneath the cylinder,

Digitized by Google

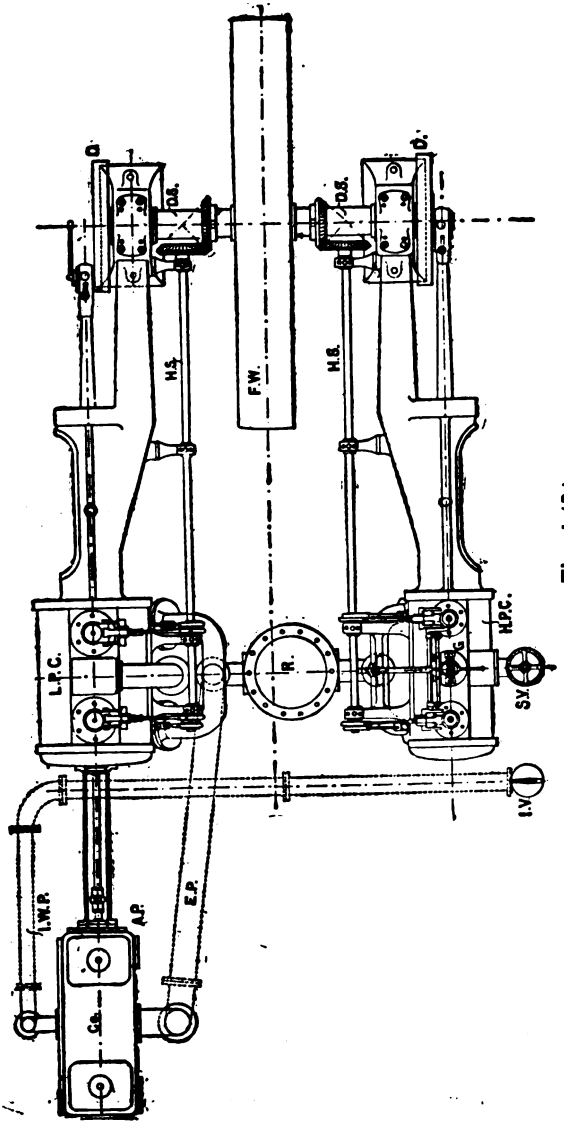

Fig. 1 (B.)

PLAN OF ROBEY & CO.'S COUPLED COMPOUND HORIZONTAL CONDENSING ENGINES.

Digitized by Google

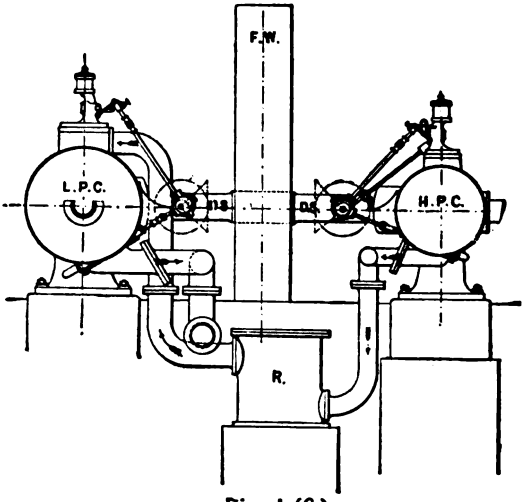

Fig. 1 (*C.*)

in order to efficiently drain the interior, and enable the pistons to work safely with the least possible amount of clearance. They are worked by exhaust eccentrics, **E.E.**, upon the horizontal shaft, **H.S.**, driving the admission valve gear.

Action of Admission Valves and Governor.—Following the action of the steam inlet valves from Figs. 2 and 3, it will be noticed that the admission valves, **A.V.**, are lifted and released by *trip* levers, **T.L.**, actuated by the admission eccentrics, **A.E.**, driven by the horizontal shaft, **H.S.**, rotating at the same speed as the disc shaft, **D.S.**, and running parallel with the engine-bed. The length of time the trip levers are in contact and consequent duration of the admission of steam into the cylinder is regulated by the governor, **G**, thus automatically varying the grade of expansion to the work being done. The upper portion of the valve spindle, **V.S.**, is attached to an air buffer, **A.B.**, which, assisted by a spiral spring, suddenly closes the valves when relieved from the trip lever.

A very precise action of the valve is obtained by this arrangement, and a very sharp cut-off is consequently insured. To prevent the admission valves, **A.V.**, being forced down too suddenly upon their seats, **S**, the usual air cushion is formed and regulated by valves in the air buffer, **A.B.**, which are so constructed that, while the admission valves close steam-tight, they yet come upon their seats with checked velocity. The

Digitized by Google

Fig. 2.

SECTIONS THROUGH THE HIGH-PRESSURE CYLINDER OF ROBEY & CO.'S COUPLED COMPOUND HORIZONTAL CONDENSING ENGINES.

Digitized by Google

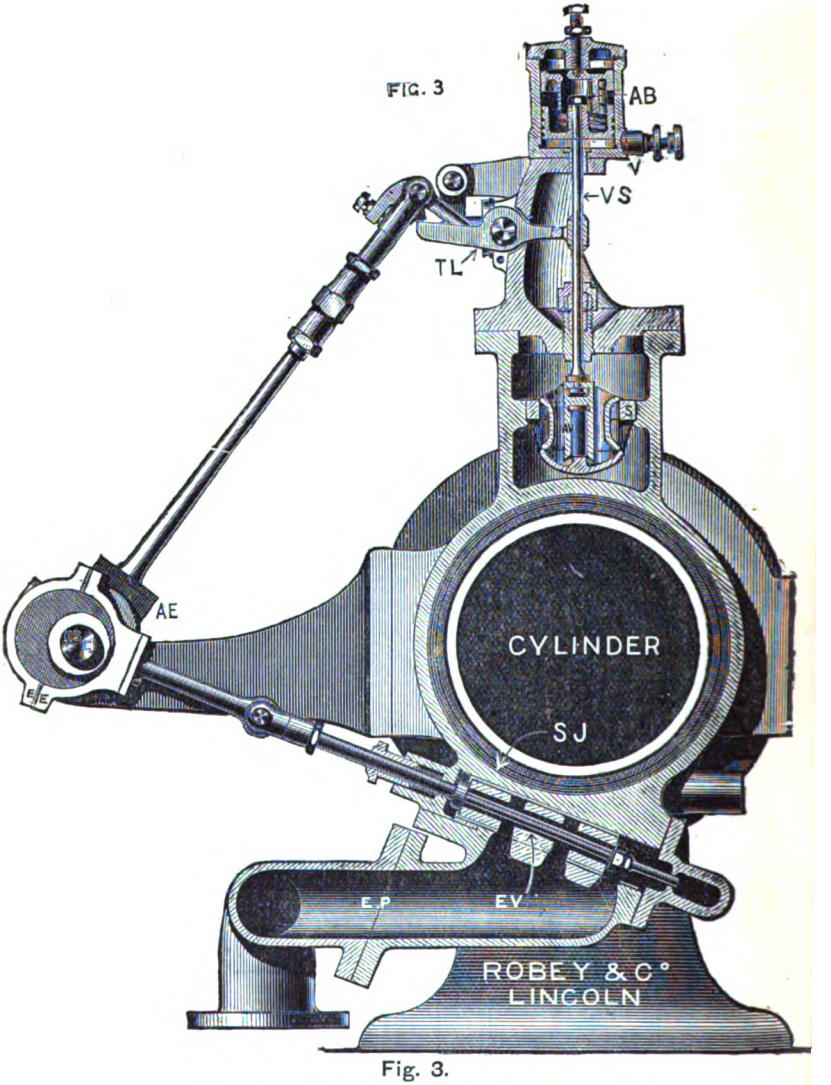

Fig. 3.

RICHARDSON & ROWLAND AUTOMATIC TRIP EXPANSION GEAR.

Digitized by Google

governor **G** (Fig. 2), regulating the admission valves, is one of Richardson's patent spring governors, which, being relieved of all working stress, is so constructed as to give a wide range of cut-off with very slight variations in speed. It is driven by gearing, **Gg.**, from the horizontal shaft, **H.S.** The admission eccentrics, **A.E.**, are so fixed upon the same horizontal shaft, **H.S.**, as to give a constant lead. When used for electric lighting the governor is supplemented by a Richardson-Nevile Patent Electric Regulator, **E.R.**, Fig. 2, which enables the engine to be controlled by the electric current itself, so as to maintain either a constant current or a constant **E.M.F.** with varying loads.

The valve gear is also arranged so that the engine can be stopped by merely pulling a cord, **C**, carried to any part of the mill or factory, a provision which is invaluable in case of accident to life or machinery.

Framing.—The engine-frames or bed-plates are of the most solid and substantial character, efficiently resisting the direct thrust and working of the engine, thus securing complete rigidity between the cylinder and main bearings, and efficiently taking up any stresses in the crosshead guides; this design being altogether a great improvement upon the original type of girder engine as first introduced into this country. The bearings, which are extra large, are made in three adjustable parts of Babbit's metal, fitted with suitable lubricators for continuous running.

The steam, in passing from the high-pressure cylinder, **H.P.C.**, to the low-pressure cylinder, **L.P.C.** (Fig. 1), enters a receiver, **R**, which is superheated by a current of high-pressure steam from the boiler circulating through a coil of piping placed inside it, thus raising the temperature of the steam previous to its admission into the low-pressure cylinder. The receiver is, in addition, lagged with wood and sheet-iron. The other details need no explanation, as they are similar to those of engines previously explained.

Crosshead: How Made and Fitted.—The crosshead illustrated by Fig. 4 possesses several important features which are worthy of notice. It is made of malleable iron or of cast-steel, and is therefore free from the risk of breaking. The curved surfaces, **C.S.**, which bear on the guides are of hard cast-iron, as this forms the best material for wear. These consist of two plates with projecting pins, shown in dotted lines at **P**, and are further secured by the screws, **S, S, S, S.** After these curved surfaces are secured into their places, the whole is turned up true from a mandril fitting into the taper which receives the piston-r[illegible] These bearing plates are designedly left without any means adjustment by the engine-driver, experience having shown t[illegible]

Digitized by Google

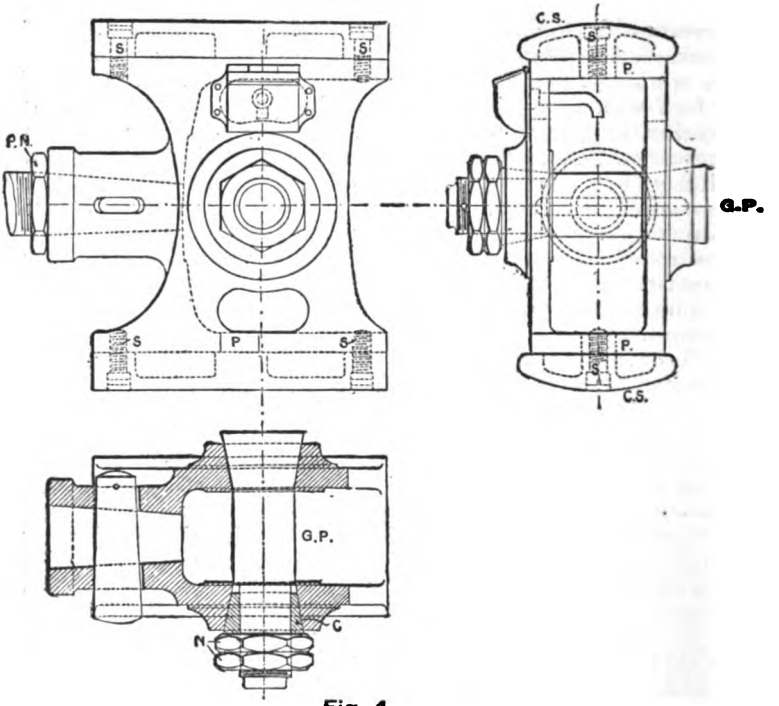

Fig. 4.

ROBEY & CO.'S IMPROVED CROSSHEAD AND GUDGEON PIN.

when such adjustments exist it is more easy to put a crosshead wrong than right. Many crosshead guides have been ruined by screws or wedges being improperly tightened by a careless driver. Should the crosshead shown by Fig. 4 ever get slack, the rubbing surfaces can be packed out by strips of metal, and the exterior again fitted into its place with very little trouble. The surfaces are, however, made so large that there is practically no wear; for guides of this proportion have been known to be in perfect working order at the end of twenty-five years' work. The gudgeon pin, **G.P.**, is a part that has often given trouble, for these pins have to be made to fit so that they can be taken out when required. They are therefore liable to get easily loose. Many methods have been employed to prevent this, but Messrs. Robey & Co. find that shown by Fig. 4 to be the best. The crosshead is bored out taper on its two cheeks, the tapers being in opposite directions. Into one of these the tapered head of the

Digitized by Google

steel pin, **G.P.**, fits, the other end being turned parallel and is surrounded by a taper steel cotter, **C.** The cotter is split longitudinally, and is forced by the nuts, **N. N.**, tightly into the coned hole, and at the same time is equally forced to fit tightly upon the pin. It is thus so firmly fixed that it is practically solid with the crosshead when the nuts are screwed up, whilst, when required to be removed, it comes out with the greatest ease. The piston-rod is secured by a cotter into the taper neck of the crosshead in the usual way. For the purpose of removing it (when the cotter is driven out) the piston-rod is provided with a fine thread and a hardened nut, **P.N.**, just behind the crosshead. When this nut is screwed up to the crosshead the rod is drawn without any difficulty. Without such a provision as this, much loss of time and temper is often occasioned.

Lecture XVIII.—Questions.

1. Explain in general terms, the difference between (1) a simple non-condensing engine; (2) a condensing engine; (3) a compound non-condensing engine.
2. Give free-hand sketches (outside elevation and plan) of a horizontal condensing engine, with a complete index of parts, and the uses as well as materials of which each part is composed.
3. Describe with a sketch the construction of a piston, piston-rod, crosshead, and connecting-rod for a horizontal land engine, and show how the several parts are fitted together, and of what materials each part is composed, and why.
4. Sketch a longitudinal section and cross-section through the cylinder of a horizontal condensing engine with expansion valve. Give a complete index of the various parts with the materials of which they are composed. Show how the steam passes into and out of the cylinder, and explain how the piston, piston-rod, and valve spindles are kept steam tight.
5. Describe with sketches and index of parts a compound non-condensing stationary land engine, as usually fitted underneath a locomotive multitubular boiler.
6. What is meant by "Automatic Expansion Gear?" Give the necessary sketches with index of parts and concise explanation to enable a person to understand its complete action, and point out the advantages usually claimed for it over an ordinary governor and throttle valve.
7. Construct scales to suit the indicator diagrams given at the end of this lecture, and divide the diagrams, as well as plot them down to one scale by the method explained and illustrated in the case of H.M.S. *Boadicea*, with the three steam expansion curves. Find also, the mean horse-power developed by each cylinder, and the weight of steam used by the engine per horse-power-hour on the assumption that the steam is "dry saturated steam."
8. Describe a horizontal factory engine which is to work expansively and with condensation. Enumerate the principal parts, and make the sketches necessary for showing the internal construction.
9. Sketch a section through a compound cylinder horizontal factory engine. Show the valves for the distribution of steam, and explain generally the advantages of this form of construction.

Digitized by Google

LECTURE XIX.

CONTENTS.—Early History of Marine Engines up to 1815—Side Lever Engine—American Beam Engine—Steeple Engine—Double Cylinder Engine—Oscillating Engine with Valve Gear.

ALTHOUGH the successful commercial application of steam-power to the propulsion of ships was not effected until after Watt invented and perfected his double-acting engine, it will be interesting to briefly refer to a few of the more prominent attempts at steam navigation previous to and at the beginning of the present century.*

The earliest record that we can find of an actual attempt to propel a boat by a steam engine, is given in a correspondence between Papin and Leibnitz, wherein the former records having been present in 1698 at a trial of a boat driven by a Savery engine. The engine kept up a supply of water sufficient to work a water-wheel, which in turn drove the paddle-wheels. Papin, who was professor of mathematics at Marburg, had a vessel fitted with an engine of his own in 1707, wherein he employed the same device, viz., a pumping engine to force up water to turn a water-wheel attached to the propelling paddle-wheels. This vessel, however, before it had been put to regular use, was destroyed by a mob of boatmen who thought it would ruin their business. Papin himself narrowly escaped with his life and fled to England.

In 1736, Jonathan Hulls took out an English patent for a steam tug, in which the paddle-wheels were to be driven by a Newcomen's atmospheric engine, to which a system of ropes and grooved wheels, &c., was to be applied, so as to give a continuous rotary motion to the paddle-wheels placed at the stern of the tow-boat.

In 1783, the Marquis de Jouffroy, who was one of the earliest *savants* in France to recognise Watt's improvements, after several previous unsuccessful attempts, had a boat 150 feet long,

* For a complete history of the application of the steam engine to the propulsion of ships, the student is referred to Mr. Woodcroft's abridgements of patents, for marine propulsion, which will be found in most Engineers' and Philosophical Societies' Libraries, as well as to Prof. Thurston's *History of the Steam Engine.*

Digitized by Google

16 feet wide, fitted with a horizontal engine and paddle-wheels 14 feet diameter, 6 feet broad, and successfully tried it at Lyons, but owing to want of funds and discouragement from the French Government he did not put it to regular use.

In 1787, John Fitch made and tried a boat at Philadelphia, which was driven by side paddles worked by a steam engine, which attained a speed of 3 or 4 miles an hour; and in 1796 he experimented with a screw propelled boat at New York. This is the first actual trial of a screw propeller, although Daniel Bernouilli had in 1752 invented a form of screw propeller which he proposed to drive by a steam engine.

In 1788, Miller, Taylor & Symington, at Dalswinton, Dumfriesshire, Scotland, built and engined a small boat (25 feet long, 7 feet beam, with a double cylinder engine, the cylinders being only 4 inches diameter), which is reported to have attained a speed of 5 miles an hour. All these early attempts up to the beginning of the present century failed, chiefly on account of the imperfect means employed to transmit motion from the piston to the propeller. It was not until Watt's improved rotative engine began to be generally understood and appreciated that anything like practical success can be said to have been attained.

In 1801, Symington, encouraged by the previous partial success with Miller's boat, and availing himself of Watt's improvements, built and engined for Lord Dundas a small boat called the *Charlotte Dundas*, which plied as a tug-boat in 1802 on the Forth and Clyde Canal with complete success, and was only laid aside owing to the fear on the part of the canal directors that the wash from her propeller would injure the banks of their canal.

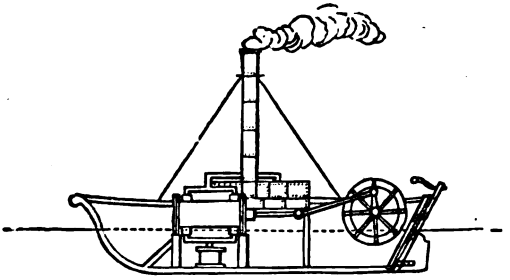

THE "CHARLOTTE DUNDAS," 1801.

As may be seen from the above figure, the vessel was fitted with a stern wheel, driven by a direct-acting horizontal engine with connecting-rod and crank. A condenser and air-pump were

Digitized by Google

fixed below the cylinder, while the boiler extended above the deck. Altogether the arrangement was most creditable, and she has justly been styled "the first practical steamboat."

In 1807, Robert Fulton, an American, had a steamer called the *Clermont* launched for him on the East River, New York, 133 feet long, 18 feet wide, and 9 feet deep, which he fitted with an engine having a cylinder 2 feet diameter, and 4 feet stroke, made for him by Boulton & Watt in England. This paddle boat made a trip to Albany, running the distance of 150 miles in 32 hours and returning in 30 without using the sails on either occasion. Old drawings, made by Fulton's own hand, of the *Clermont's* engine, are in the possession of Professor Thurston at the Stevens' Institute of Technology. The success of the *Clermont* on the trial trip was such, that Fulton soon afterwards advertised the vessel as a regular passenger boat between New York and Albany, and he has therefore the credit of first making steam navigation an every-day commercial success.

In 1812, Henry Bell constructed the *Comet* on the Clyde, a craft of 30 tons burden, 40 feet long, and 10½ feet beam, which ran for several years between Glasgow and Greenock as a regular passenger steamer.

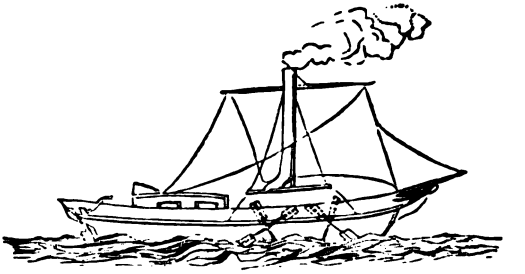

THE "COMET," 1812.

As may be seen from the above figure, there were two paddle-wheels on each side, driven by an engine rated at three horse power, of which the following diagram taken from Professor Rankine's *Steam and Steam Engine* gives an idea of its style and proportion.

This engine, as shown by the drawing, is what might be expected to have been used at the date of its construction for a small land engine, since it is fitted, not only with a fly-wheel, but also with a Watt's pendulum g[illegible]or. It is a simple form of side-lever engine, where le[illegible]ide rods from the

Digitized by Google

piston-rod crosshead engage with one end of a side lever, having a fulcrum or wyper shaft at its other end. With several important additions and improvements, such as jet or surface condensers, variable hand-regulated expansion gear, foot-trip and hand reversing gear, and omitting the fly-wheel and governor, this style of engine, termed a "grasshopper" engine, is to

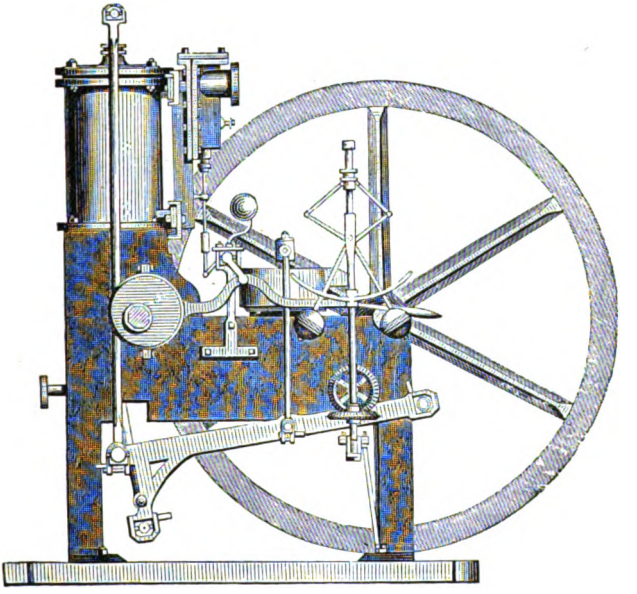

THE ENGINE OF THE "COMET."

be found at the present day doing good work in many tugs on the Thames, Clyde, Forth, and other ports. Several advantages are claimed for it, such as cheapness of construction, long stroke even in shallow water boats (where the cylinder is placed near the keel instead of on a raised platform as in the *Comet's* engine), less chance of sticking on the dead points than most other single cylinder forms of engines (owing to the position occupied by the crank shaft, the connecting-rod being placed between the cylinder side rods and the side-lever fulcrum), and also the fact, that it will work with less attention and in a greater state of disrepair than many other more finely adjusted forms of engines. The cylinder of the *Comet* is preserved as an interesting relic in the Glasgow Corporation Kelvingrove Museum.

From this date the advancement and success of steam navig tion was very rapid, for we find that Bell soon built seve

Digitized by Google

other steamboats. In 1814, there were 5 steamers in Great Britain (all Scotch) regularly at work in British waters; in 1820 there were 34, one-half in England, 14 in Scotland, and the rest

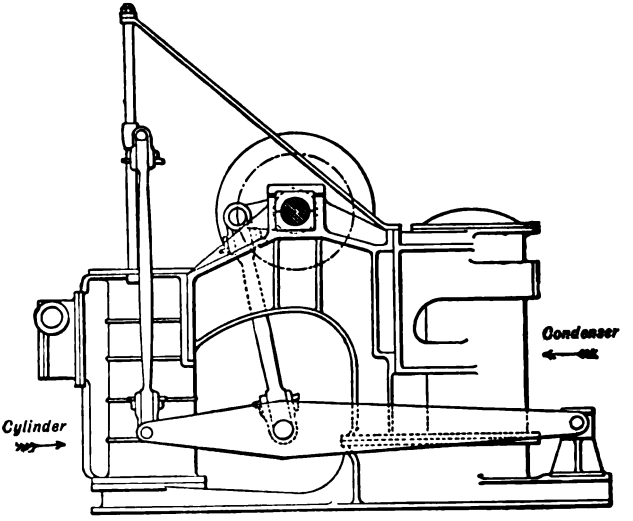

THE "GRASSHOPPER" ENGINE.

in Ireland. In 1840 there were 1,325 steam ships in Great Britain, of which 1,000 were English, and 250 Scotch. At present, in 1886, there are about 7,750* registered steamers belonging to all nationalities, and in 1884 on the Clyde alone, about 300 steamers of 290,000 tons burden were launched and fitted out.

Side-Lever Engines.—In the earlier forms of engines for steamships, the propeller almost invariably used was the paddle-wheel, driven by what was known as the side-lever engine. This form of engine may be regarded as the marine counterpart of the land beam engine, so much in vogue in the early part of this century. This type of marine engine, although now entirely superseded in this country, was brought to great perfection by the Messrs. Napier of Glasgow, who fitted them to many of the most famous passenger ocean-going steamers prior to 1850.†

* 8,930 registered steamers belonging to Great Britain in 1888.

† The author remembers as late as 1866, being sent as an apprentice to assist at the repair of the engines of the old *City of London* (built and engined by Messrs. Robert Napier & [illegible]ut 1840), which plied for

Digitized by Google

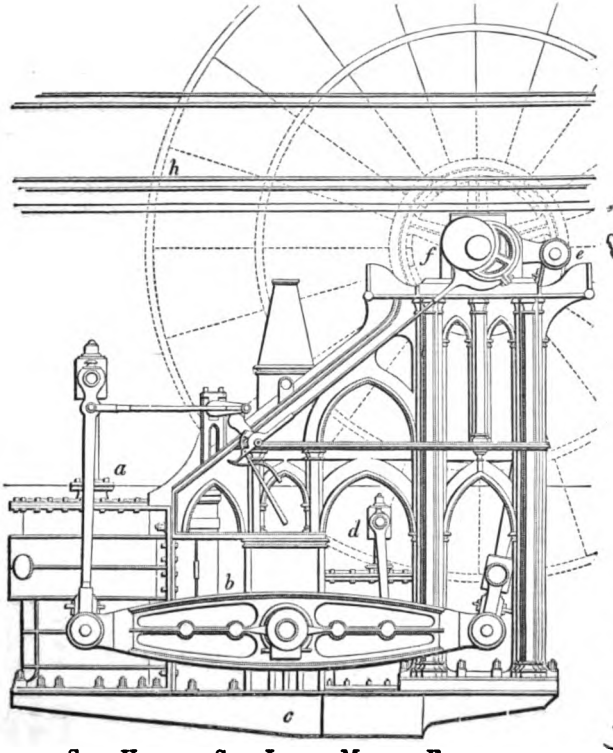

SIDE VIEW OF SIDE-LEVER MARINE ENGINES.

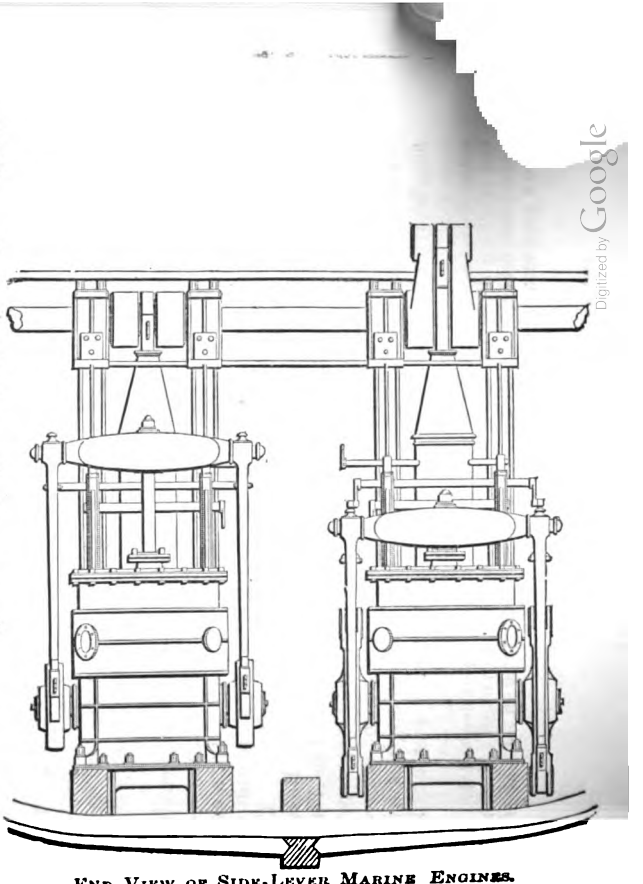

END VIEW OF SIDE-LEVER MARINE ENGINES.

Digitized by Google

The foregoing diagrams show the general arrangement of these engines :—The figure on the left hand is a side view of the port engine, while that on the right hand is an end view of the cylinders, &c., of both engines.

Each engine had a pair of side levers, *b*, fixed to one central rocking shaft, but on opposite sides of the steam cylinder, *a*. The piston-rod of the cylinder carried a crosshead like a large T (clearly seen in the end view), from which were suspended a pair of side rods, and those rods engaged with the after ends of the side levers. The other or forward ends of these side levers were connected to a single cross-tailed connecting-rod like an inverted T, thus ⊥, the upper end of which engaged the crank pin, *e*. The air-pump was also worked from the main side levers as shown at, *d*, while the jet condenser was situated between it and the cylinder. The eccentric with its counterpoise weight is seen at, *f*, and the paddle-wheel at, *h*. The whole engine rested on a heavy cast-iron girder sole plate, *c*. Such engines rarely used steam above 20 lbs. pressure on the square inch, and made about 18 revolutions per minute, or a piston speed of not more than 200 feet per minute, with a consumption of coal rarely less than 7 lbs. per indicated horse-power-hour; whereas now-a-days, a steam pressure of 150 lbs. with a piston speed of 600 feet, and a coal consumption of less than 2 lbs. are quite common. They were very heavy, occupied great space, and were often difficult to start, requiring in the larger boats sometimes two or more men at the starting wheel, for steam hydraulic starting gear, and balanced slide valves, had not been devised in those days, and only one eccentric was used, so that the slide valves had to be worked by hand until sufficient speed was attained to keep it in position for steaming either ahead or astern.

American Beam Engine.—This form of engine, which is peculiar to American river steamers, owes its characteristic design chiefly to Robert L. Stevens, the son of Colonel John Stevens, a contemporary and strong rival of Robert Fulton in shipbuilding and marine engineering at the beginning of this century. The "skeleton or walking beam" was first designed by Robert Stevens in 1822 for the *Hoboken*, and in 1827 he built the *North America*, one of the largest and most successful river steamers at that time. It attained the then extraordinary speed of between 15 and 16 miles an hour. This vessel had a pair of engines with single cylinders, each 44½ inches diameter, and 8 feet stroke,

many years between London and Aberdeen. The repair was necessitated by the breaking of one of the large side levers, *b*, a circumstance of not unfrequent occurrence with such engines. The diagrams on the last page give a good idea of her engines.

Digitized by Google

which made 24 revolutions per minute. In the vessel, he introduced for the first time, what is known in America as the "hog frame," a simple and efficient form of stiffening truss, for keeping long, light, and shallow vessels in shape when irregularly laden, and when steaming fast under the action of powerful engines.

The following figure, taken by permission from Professor Thurston's *History of the Steam Engine*, clearly illustrates the common type of American beam engine, which has been even to the present day but slightly altered in general style since it was first introduced by Stevens, except that iron and steel take the place of wood in the "gallows frame," and a higher steam pressure, sometimes as high as 60 lbs. is now used :—

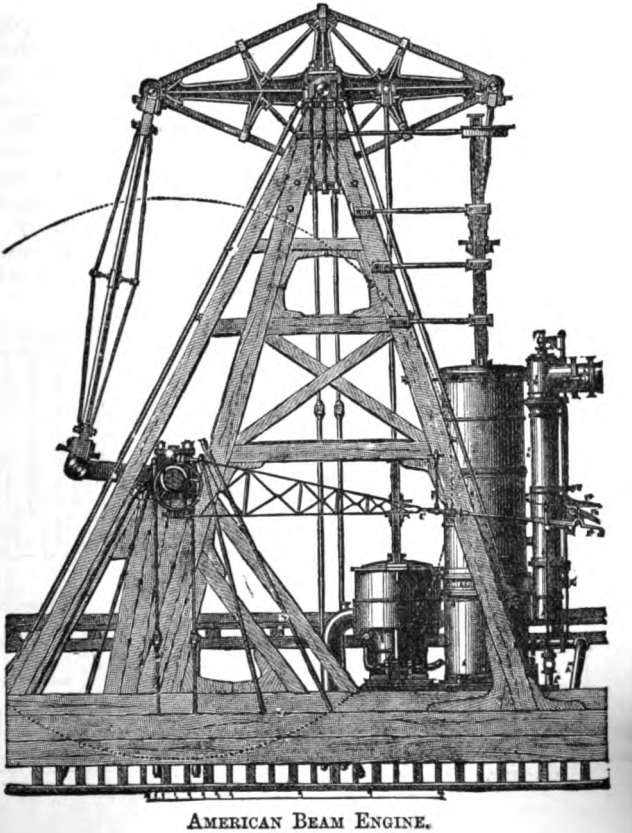

AMERICAN BEAM ENGINE.

Digitized by Google

"This class of engine is usually adopted in vessels of great length, light draught, and high speed. But one cylinder is commonly used. The piston-rod crosshead is coupled to one end of the beam by means of a pair of links, and the motion of the opposite end of the beam is transmitted to the crank by a long connecting-rod. The beam has a cast-iron centre, surrounded by a wrought-iron strap of lozenge shape, in which are forged the bosses for the end centres, or for the pins to which the connecting-rod and the links are attached. The main centre of the beam is supported by a "gallows frame" of timber, so arranged as to receive all stresses longitudinally. The crank and crank shaft are of wrought-iron. The valve gear is usually of Stevens' form, the combined invention of Robert L. and Francis B. Stevens; the steam valves being of the disk or poppet variety, rising and falling vertically, and are four in number, two steam and two exhaust valves being placed at each end of the cylinder. · The condenser is placed immediately underneath the steam cylinder. The air-pump is placed close beside the former, and worked by a rod attached to the beam. Steam vessels on the Hudson River have been driven by such engines at the rate of 20 miles an hour. This form of engine is remarkable for its smoothness of working, its economy and durability, its compactness, and the latitude which it permits in the change of shape of the long flexible vessels in which it is generally used without injury by "getting out of line."

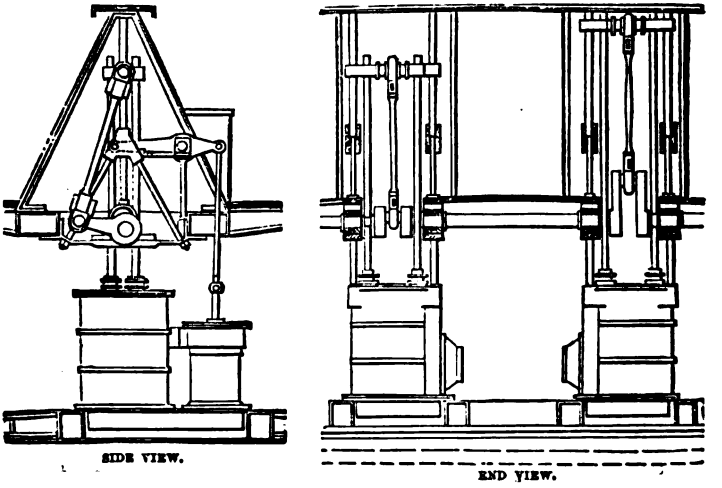

SIDE VIEW.

END VIEW.

THE "STEEPLE" ENGINE.

Digitized by Google

It has, however, never found favour in this country, although several have of late been built on th
by Messrs. A. & J. Inglis, of Pointhouse, for the River Plate South-American traffic. These bo
"gallows frames" of steel, but in their general features, they were similar to that shown in the illus
p. 193.

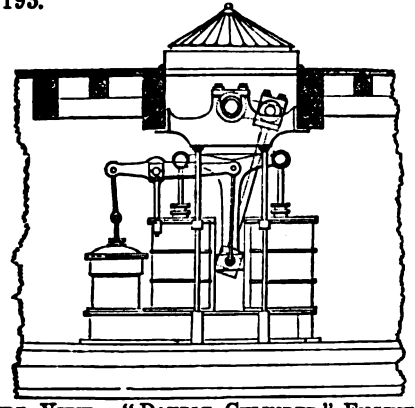

SIDE VIEW.—"DOUBLE CYLINDER" ENGINE.

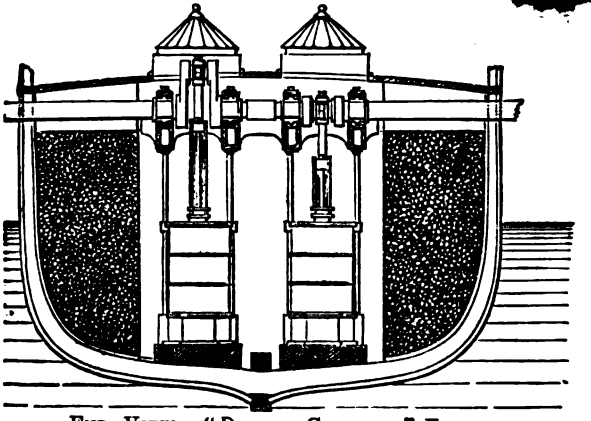

END VIEW.—"DOUBLE CYLINDER" ENGINE.

The Steeple Engine was one of the earliest forms of marine engine, and a great favourite on the Clyde for tug-boats and river steamers. It may still be seen in some of these older boats on the Clyde and elsewhere. It possesses certain advantages over the side-lever engine, for it occupies less space, and is cheaper to make, having fewer working parts; but, on the other hand, the length of the stroke is limited by the depth of the ship, and considerable vibration takes place in the overhead guides, which rear high above the cylinder in a manner which renders them not so easily stayed.

Double Cylinder Engines.—One of the first of the direct acting type of marine engines, was that known

Digitized by Google

as Maudslay's (of London) double cylinder engine, a cross section and side view of which is shown in the preceding figure.

It consisted of two equal cylinders, placed side by side, of which there were usually two sets, as shown. In order to get sufficient length of connecting-rod, the piston-rods of each pair of fore and aft cylinders were connected to one crosshead of T shape, the lower end of which dipped down between vertical guides placed betwixt the cylinders, and was there attached to the lower end of the main connecting-rod. The air-pumps were worked as shown from this same point by smaller connecting-rods and levers.

Oscillating Engines.—The oscillating engine was first used as a land engine, for we find that in 1785 Murdoch, the manager of Messrs. Boulton & Watts' engineering works at Soho, Birmingham, devised a simple oscillating engine. Trevithick is also reported to have suggested this form of engine, but it remained for the well-known firms of Messrs. John Penn & Son, of Greenwich, and Messrs. Maudslay & Field, of London, to perfect and adapt it specially to paddle steamers. The general arrangement is shown by the following figures, of which the left hand one is a side view, and the right hand one an end view, taken from Professor Rankine's *Steam and Steam Engine*:—

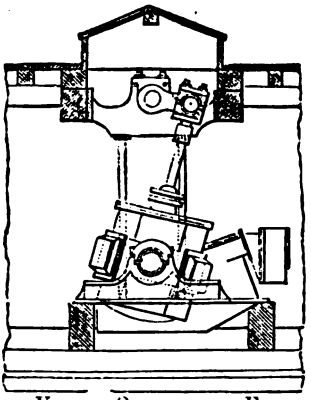

SIDE VIEW.—OSCILLATING ENGINE.

In these engines the chief feature is, that the connecting-rod is altogether dispensed with, the upper end of the piston-rod being supplied with an ordinary connecting-rod crank pin end, so as to work directly on the crank. The cylinder is usually placed vertically under the crank shaft, and is carried on two trunnions near the middle of its length, so that it may

Digitized by Google

freely sway to and fro through a small arc, and thus permit the piston and piston-rod to follow the movements of the crank. From the following sectional elevation and plan (p. 198) of an oscillating marine engine cylinder, C, it will be seen, that the trunnions are hollow, the one next the skin of the ship being always the steam trunnion, S T, or that one connected directly to the steam pipe leading from the boiler, while the inner or central one is the exhaust trunnion, E T, connected directly to the condenser. Both are kept steam tight with a stuffing-box and gland. There are usually two valve chests bolted to the valve faces, V F, V F, placed on opposite sides of the cylinder, and at equal distances from the centre lines of the trunnions, so as to balance each other as they oscillate with the cylinder. A steam belt surrounding the cylinder connects the steam trunnion with the valve chests, and also the exhaust port of the valve casing with the exhaust trunnion; two diaphragms as shown, are cast in this belt to prevent communication between the entering and exhausting steam, except through the action of the slide valve. The top cover, T C, with its gland, G, and stuffing-box have to be made stronger and deeper than in ordinary engines with a connecting-rod and piston-rod crosshead guide, as they have to withstand the side stress of turning and stopping

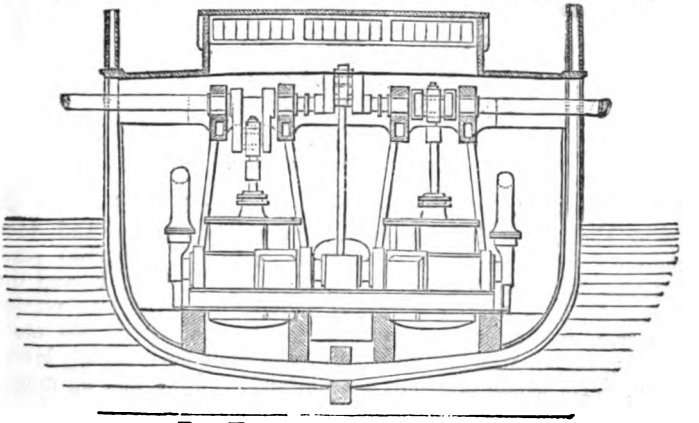

END VIEW.—OSCILLATING ENGINE.

the momentum of the cylinder, and the piston-rod has also to be made larger for the same reason. A bottom cover, BC, is pro[illegible] for the purpose of facilitating the casting and boring out cylinder during manufacture, or getting in to clean out unscrew the piston-rod nut on the bottom of the piston.

Digitized by Google

slide valves which are generally ordinary D slides, are worked by an ingenious arrangement from eccentrics on the crank shaft, as seen by the figure on the opposite page.

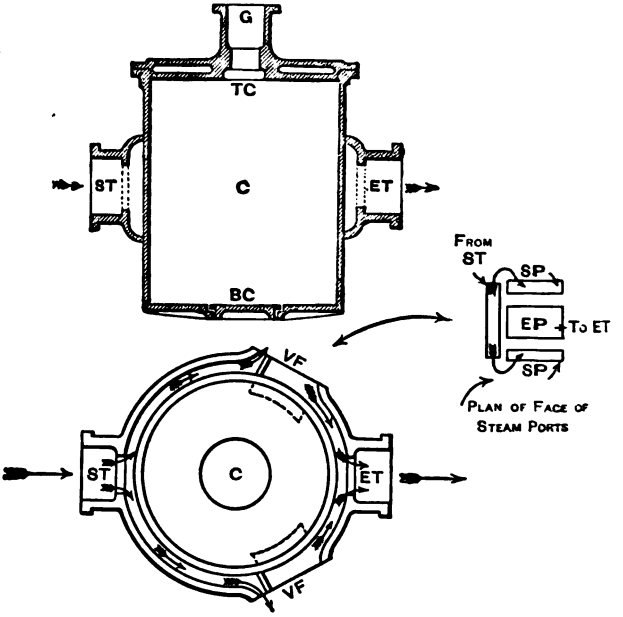

Oscillating Cylinder.

Two eccentrics, E_1, E_2, generally cast and fitted on to the crank shaft, C S, in two parts, communicate an up and down motion (when one or other of them is in full or partial gear), through their eccentric rods, E_1 R, E_2 R, the link, L, and die-block, D, to a curved sector, S, moving between two vertical guides, G R. In this curved sector, S, are fitted two metal blocks, B_1, B_2, attached to the inner ends of two rocking levers, R L_1, R L_2, which transmit a simultaneous down and up motion to the cylinder valve spindles, V S_1, V S_2. The rocking levers with fulcra, F_1, F_2, are fixed to cylinder and curved round it to meet the valve spindles. The curvature of the sector is drawn with a radius from centre of trunnion. When it is required to reverse the engine, the reversing rod, R R, is moved to the right or to the left according as the engine is required to go ahead or astern, by the starting wheel, which is usually fixed on the platform on

Digitized by Google

a level with the top framing carrying the crank shaft. Either one or, if preferred, two air-pumps are worked at an angle from a central crank (shown in the figure, p. 197), by means of a connect-

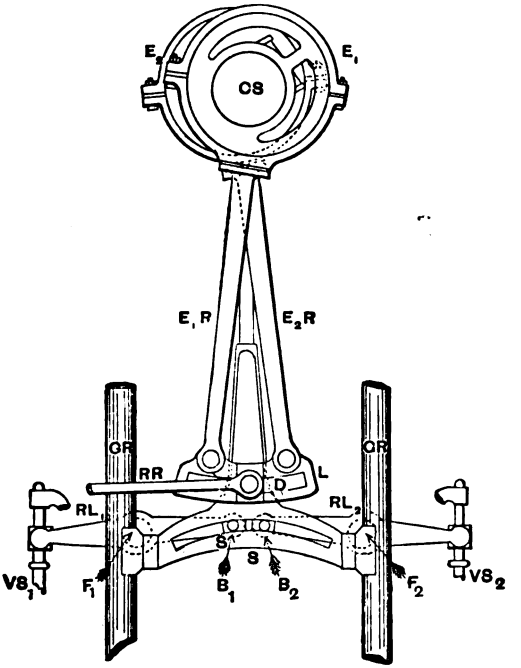

VALVE GEAR FOR OSCILLATING ENGINE.

CS	for	Crank Shaft.	S	for	Sector.
E_1, E_2	,,	Eccentrics.	G R	,,	Guide Rods.
E_1 R, E_2 R	,,	Eccentric Rods.	R L_1, R L_2	,,	Rocking Levers.
L	,,	,, Link.	F_1, F_2	,,	,, ,, fulcra.
R R	,,	Reversing Rod.	B_1, B_2	,,	Sector Blocks.
D	,,	Link Die-block.	V S_1, V S_2	,,	Valve Spindles.

ing-rod attached to a trunked plunger, while the condenser, if of the jet type, is placed between the cylinders, and if of the surface kind either before or behind them, but in the centre line of the ship.

Between ten and twenty years ago, oscillating engines were by far the most popular kind of engines for fast passenger paddle-wheel steamers in this country. The oscillating engine was usually worked at a steam pressure of from 30 to 35 lbs. on the square inch, and produced most economical results at that pres-

Digitized by Google

sure, having sometimes as low a consumption as 2¾ lbs. of coal per indicated horse-power-hour. Now, however, engines of the compound type, with an early cut-off and expansion valve, can be made to work much more economically than this. A general feeling exists, that the trunnions of oscillating engines will not keep tight at very high pressures, such as 100 or more lbs., although some aver that there is no great practical difficulty in this respect. The oscillating form of engine does not seem to lend itself readily to compounding, and we do not hear of so many being ordered as formerly; direct-acting diagonal engines being seemingly preferred. However, where the economy of compound engines does not show to so great advantage, such as in the case of steamers making quick, rapid, short passages, with frequent stoppages, the oscillating engine is still a favourite, for it is the most compact and direct acting type of engine we have. It is easily started and stopped, the weight of the machinery is less than in most kinds, and is well down in the hull of the ship; moreover, the stresses are transmitted to, and readily taken up by the keelson, and the ship's frames.

LECTURE XIX.—QUESTIONS.

1. Referring to the early history of steam navigation previous to the beginning of this century, point out the chief causes of failure of early inventors.
2. Give an outline free-hand sketch of a "side-lever engine," with index of parts, using the first letters of the names of the parts, and state why this type of engine was given up, and when.
3. Give an outline sketch, with index of parts, of the "American beam engine," and state the advantages claimed for it, which will account for its retention, even to the present date, by the Americans. What is the "hog frame," and of what use is it? Have you ever seen it or the beam marine engine applied in this country? If so, where?
4. Sketch in outline a "steeple engine" and a "double cylinder engine," with indices of the chief parts.
5. Sketch in outline a Grasshopper engine, and give an index of the chief parts. State the advantages claimed for this form of engine, and the kind of steamer for which it is best adapted. Have you ever seen an engine of this kind at work, and where?
6. Describe an eccentric and eccentric rod as fitted to marine engines, and show that they produce the same motion as a crank and connecting-rod. How is the eccentric connected with the slide valve in an oscillating engine? Give sketches and index of parts.
7. Describe the construction of the cylinder of an oscillating engine. Make a diagram showing how the slide valves are worked by the eccentrics as well as the steam and exhaust passages.
8. Describe, with sketches, the construction and arrangement of the cylinder, steam ports, and passages, together with the slide valve of a marine oscillating engine, and show the manner in which the valve gear is adapted to the oscillating cylinder. Sc. & A. Exam., 1886.
9. Describe, with sketches, the construction of an oscillating engine, and the method of distributing the steam. (*Adv. S. and A. Exam.*, 1889.)

Digitized by Google

LECTURE XX.

CONTENTS.—Diagonal Direct-Acting Engines, with Joy's Valve Gear and Alley's Flexible Coupling, &c.—Paddle-Wheels—Radial Paddle-Wheel—Feathering Paddle-wheels.

Diagonal Direct-Acting Engines.—This form of engine is very convenient, and is now the most popular for fast paddle-wheel river steamers of light draught. As will be seen from the illustrations which we give, it is neither more nor less than a horizontal engine set at such an angle, that the forward end is elevated to suit the necessary height of the paddle shaft, while the after end rests firmly on the ship's floor frames. It no doubt takes up a larger fore and aft space than the oscillating type, but, on the other hand, it occupies less space athwart-ship, and when the framing is carefully designed, using wrought-iron and steel wherever possible (instead of the older style of cast-iron framing), the weight per horse-power does not in all probability exceed that of its chief rival the oscillating engine. The weight is also better distributed along the keel of the ship, and the stresses set up by its action are chiefly in a fore and aft and downward direction, and therefore easily resisted by the natural structure of the vessel. Moreover, the chief working parts are in full view of the engineer while at the starting wheel, the engine is readily got at for adjustment and repairs, easily compounded, and all the most modern and efficient devices for quickly starting, stopping, and reversing, or for economising steam are easily applied to it. We illustrate one of the latest of these popular diagonal direct-acting engines, of which eight sets with their boilers, &c., were made last year (1885) by Messrs. Alley & Maclellan, Sentinel Works, Glasgow, for steamers now trading on some of the large rivers in India.

By studying the two figures, along with the index of parts, the student will be able to get a minute idea of the general arrangement of boilers and engines, but, in order that he may the better grasp the construction of the engines, we illustrate a perspective view of them as they lay in the workshop before being removed and fitted into the steamers. It will be observed that they are compound condensing engines, and are fitted with all the lat

Digitized by Google

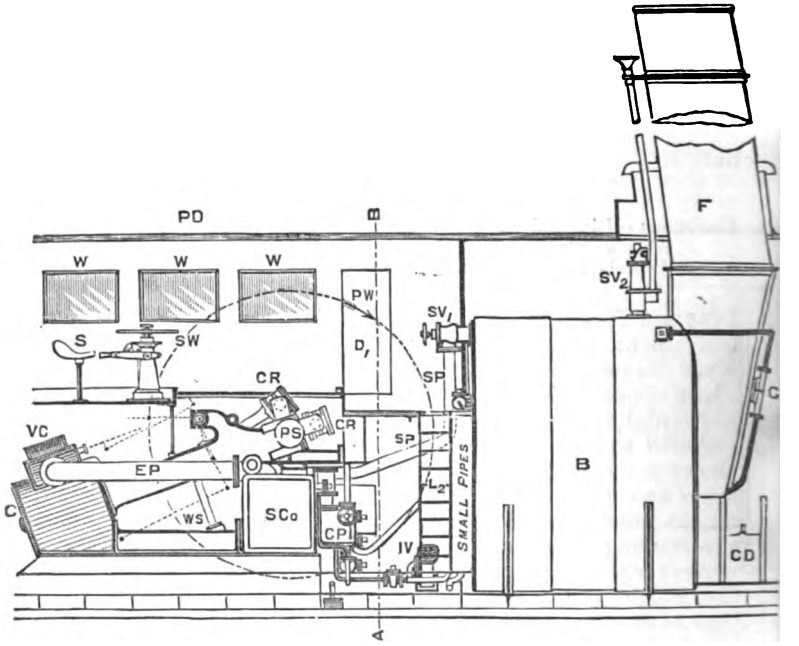

GENERAL LONGITUDINAL ARRANGEMENT.

DIAGONAL COMPOUND ENGINE AND BOILER.

improvements, such as Joy's valve gear and Alley's flexible main shaft coupling. As these two improvements or modifications of them are fast coming into use, we shall illustrate and describe them.

Joy's Patent Valve Gear is a clever device, whereby the necessary motion of the slide valve, and the facility for reversing the engine, are effected by a series of links and connections between the connecting-rod and the valve spindle, thus replacing the ordinary double eccentrics and Stephenson's link-motion. The motion obtained by it is a very perfect one for a slide valve, for the travel of the valve is made quick on opening and on shutting off steam to the cylinder, and slow when the steam is expanding and exhausting. This is effected without any undue lead or com-

Digitized by Google

pression, or too early an exhaust. The space usually occupied by eccentrics on the crank shaft is saved, and thus the cylinders and the cranks, as well as the main bearings, can be brought much closer together.

At a joint, J, on the connecting-rod, C R, is attached a double link, L_1 L_1, about $\frac{1}{3}$ along this double link is attached a pair of

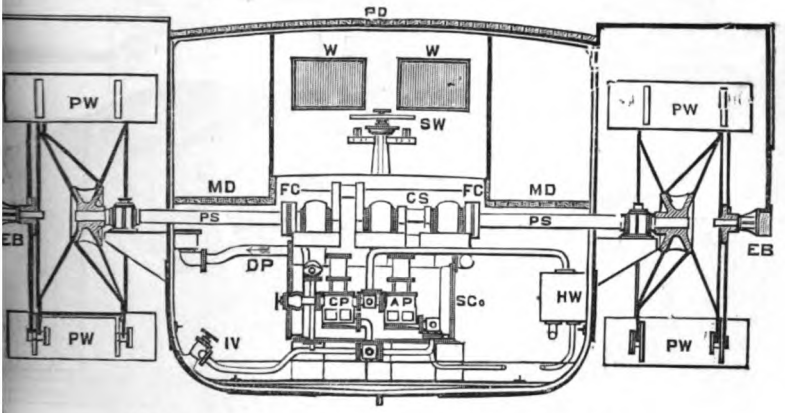

CROSS-SECTION THROUGH LINE A...B ON OTHER VIEW.

DIAGONAL COMPOUND ENGINES AND BOILER.

Index to Both Views.

PD	for Promenade deck.	EP	for Exhaust pipe.
MD	,, Main deck.	WS	,, Wrought-iron stanchion.
CD	,, Coal (bunker) door.	SCo	,, Surface condenser.
B	,, Boiler.	CP	,, Circulating pump.
F	,, Funnel.	IV	,, ,, inlet valve.
G	,, Gauge pipe to indicate height of water.	DP	,, ,, discharge pipe.
		AP	,, Air-pump.
SV_2	,, Safety valves.	HW	,, Hot-well.
SV_1	,, Stop valve.	CR, CR	,, Connecting-rods.
SP	,, Steam pipe.	CS	,, Crank shaft.
D_1,	,, Door to engine room.	FC, FC	,, Flexible couplings.
W, W,	,, Windows ,,	PS, PS	,, Paddle shafts.
L_2	,, Ladder ,,	PW	,, Paddle-wheel.
S	,, Seat for Engineer.	EB, EB	,, Outer eccentric bearings for feathering floats.
SW	,, Starting wheel.		
VC	,, Valve casing.		
C	,, Cylinder, low pressure.		

Digitized by Google

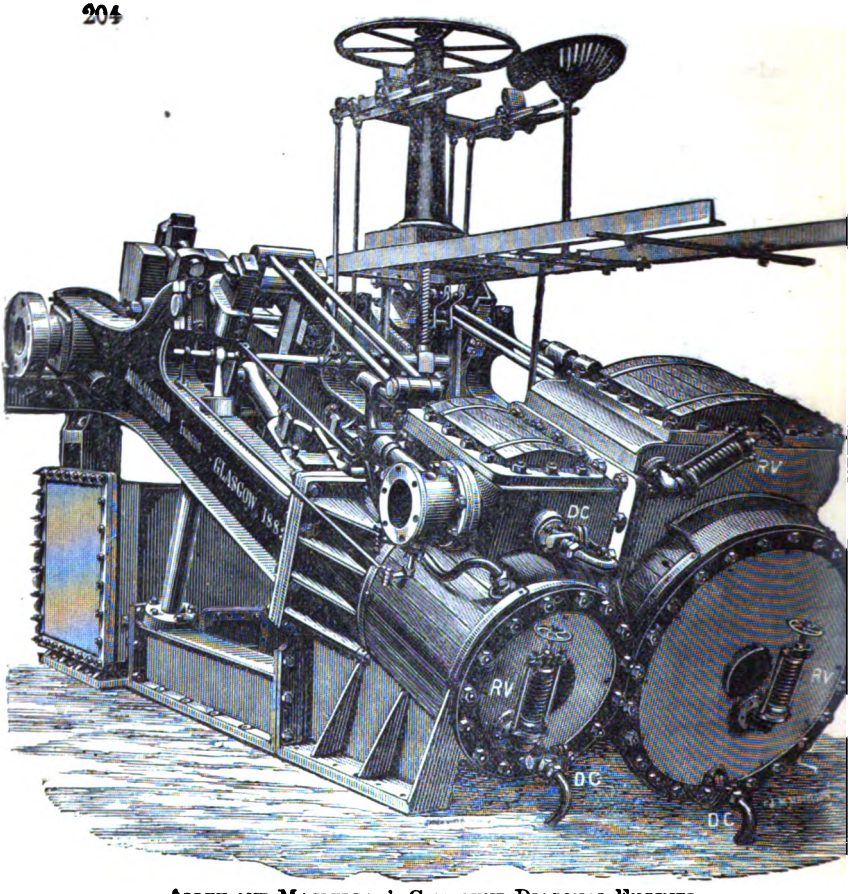

ALLEY AND MACLELLAN'S COMPOUND DIAGONAL ENGINES.

DIMENSIONS OF COMPOUND DIAGONAL ENGINES, &c.

STEAMER.		ONE BOILER (STEEL).		ENGINES.	
Builders' measurement	= 222 tons	Diameter . .	= 11 ft. 6 in.	Diameter H.P. cyl.	= 22 in.
Length . .	= 140 feet.	Length . .	= 9 ft. 6 in.	,, L.P. cyl.	= 37½ in.
Beam . .	= 18 feet.	Thickness of shell	= $\frac{13}{16}$ in.	Length of Stroke	= 30 in.
Depth of hold .	= 7 ft. 6 in.	Furnaces . .	= Two.	No. of strokes per min.	= 44
Speed . . .	= 14½ kts.	Tubes . . .	= 192	Cut off in each cyl.	= 15 in.
Weight of Engines	= 22 tons.	,, Diameter	= 3¼ in. O.D.	Indicated Horse-Power	= 300.
,, Boilers in		Grate surface .	= 33 sq. ft.	Diameter of Paddles	= 12 ft.
,, king trim	= 23 tons.	Total heating surface	= 1298 sq. ft.	Breadth . . .	= 6 ft.
		Pressure . .	= 100 lbs.	Immersion . .	= 2 ft. 3 in.

Digitized by Google

links, L_2, the upper ends of these being coupled first to sliding blocks, S B (working in curved guides, C G), and the extreme end to the valve connecting-rod, V R, which terminates at and is fixed to the valve spindle, V S, with its accompanying

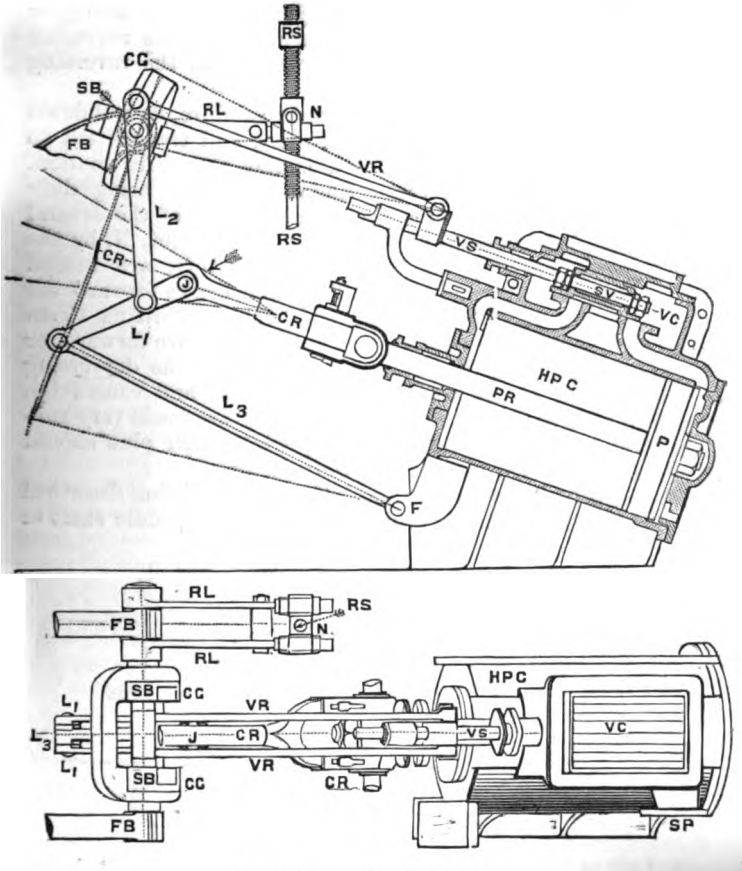

JOY'S PATENT VALVE GEAR.

slide valve, S V. The lower end of the double links, L_1 L_1, is connected to a radial rod or link, L_3, terminating in a fulcr F, fixed to a bracket on the high-pressure cylinder, H

Digitized by Google

wherein is shown the piston, P, and piston-rod, P R. Precisely the same arrangement is carried out with respect to the low-pressure cylinder and slide valve. The double (curved) guide, C G, is free to move to the right or to the left in bearings carried by the main framing brackets, F B (see also the perspective and general views of the engine). The reversing or starting wheel, S W, is keyed at the upper end of the reversing screw, R S, which screw has a nut, N, fixed to the reversing levers, R L.

It will thus be seen, that the combined to-and-fro, up-and-down motion of the connecting-rod, is converted and transmitted to the valve spindle, in the form of a merely to-and-fro motion. The eccentricity of the connecting-rod's motion being duly corrected by the relative positions and lengths of the several links, L_1, L_2, L_3, &c., and that by elevating the nut, N, by the reversing screw, R S, the curved guides, C G, are turned backwards or from the cylinder; this action draws forward the valve rod with valve spindle and slide valve, admitting steam behind the piston, and causing the engine to move forward, or in other words putting it in forward gear, while the depressing of the nut, N, effects precisely the opposite, and causes the engine to revolve backwards. All the joints are made very substantial and should be case-hardened, while their pins should be of steel to prevent wear and obviate rattling.

Alley's Patent Flexible Coupling.—The engines being described were fitted with this invention, which allows the paddle shaft to

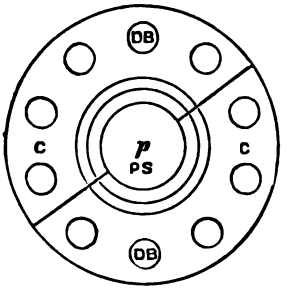

FACE OF COUPLING.

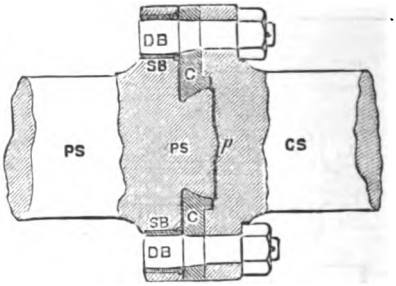

LONGITUDINAL SECTION.

accommodate itself to the yielding of the paddle boxes and the hull of the vessel as it vibrates and changes form when working in a sea-way. It is equally applicable to the shafting of screw steamers. The hull of a vessel cannot be made absolutely rigid, and therefore it is wron[redacted]e the shaft rigid. With

Digitized by Google

a rigid shaft and a flexible hull the result is an enormous amount of friction in the bearings, which consumes power, and often causes the bearings "to fire." Scarcely a month passes that we do not hear of some steamer breaking a main shaft, often to the danger of life and property, and this in many instances may be traced to a want of trueness in the line of the bearings, due to the vessel having warped from uneven stowage, or from having encountered heavy weather.

The coupling consists of a projection formed on the end of the paddle shaft, P S, which is part of a ball, the centre of this projection being formed into a blunt point at, *p*. This point rests hard against the crank shaft, C S, and transmits any thrust along the line of shafting. The outside of the projection is clasped by the coupling ring, C, turned to fit the ball joint. This ring, C, is made in halves (as may be seen by the end view), and is secured to the crank shaft by means of the driving bolts, D B. The concave portion of this ring takes any pull that may come on the shaft along the line of shafting. The ends of the driving bolts, D B, project as shown into holes in the paddle shaft, P S, and thus act as drivers. These projecting pins are made 2½ times the diameter of the bolts usually employed for main-shaft coupling flanges. These pins are slightly barrel-shaped in form, and made an easy fit for the holes in which they work. The holes are lined with hard steel bushes, S B, while the pins are case-hardened to prevent chafing and wearing away. It will be observed that there is a small space left clear between the paddle shaft flange and the coupling ring, C, to permit of perfect up and down or side play, or un-linement between the crank and paddle shafts for the reasons already mentioned.

Relief Valves.—On referring to the perspective view of the engines, it will be seen that relief valves, R V, are fitted not only to the front and back of the high- and low-pressure cylinders, but also to the back of the low-pressure slide valve casing, for the purpose of preventing damage to these parts through water gathering in them. These relief valves consist of ordinary mushroom valves, held down by strong spiral springs, and adjusted to any desired pressure by hand wheels and screws, as shown.

Drain Cocks, D C, are fitted to the back of the high-pressure slide valve casing, and to the bottoms of both cylinders. The pipes leading from them are all connected to the condenser. These cocks are opened before starting the engines, so as to clear away any water that may have resulted from condensation of steam, and also when the engines have to be stopped for any length of time.

Digitized by Google

Paddle-Wheels.—Having briefly described the different forms of engines used for driving paddle-wheels, we now naturally refer to the wheels themselves, leaving a description of the screw propeller until after we have noticed the styles of engines more particularly adapted to driving it.

The efficiency of the paddle-wheel falls off when the wheel is too deeply immersed, consequently for long voyages, where the draught of the vessel decreases as it proceeds, due to consumption of coal, &c., if the wheels are to be immersed to the proper depth at the end of the voyage, they must of necessity be too deep at the beginning. This variable immersion of paddle-wheels is the most serious objection to their use for long voyages. Also, in a heavy sea the *rolling* of the vessel, besides causing the engines to race, induces unequal straining of the machinery, since one wheel lifts out of the water, while the other sinks more deeply in it. Neither of these disadvantages is found in the screw propeller, for the screw is immersed considerably below the surface of the water, and since it is placed in the centre line of the ship, the rolling motion has no effect on it. The heaving of the ship in a fore and aft direction causes racing of the engines, but no unequal straining is set up. For short voyages, however, and where the draught is practically unchanged during the voyage, the paddle-wheel still holds its own with the screw, and for navigation in shallow rivers it is very valuable; the screw, in such a case, being quite unsuited, on account of its nearness to the bottom of the vessel. The vibration set up by the motion of paddle engines also is not so great as that from the fast-running engines necessary for the screw propeller.

Radial Paddle-Wheel.—This form of wheel is the simplest, strongest, least expensive, and least liable to derangement, but is also unfortunately the *least efficient*. It consists of radial arms, which are attached to a cast-iron boss at the centre, and are bound at their outer extremities by one or two wrought-iron rings. Flat boards are fixed rigidly to these radial arms, parallel to the axis of the wheel, and are known as "floats," and it is the thrust or push which these boards or floats exercise upon the water as the wheel rotates, which propels the vessel. The floats of a wheel of this kind, of necessity enter and leave the water in an oblique manner, and are only perpendicular to the surface of the water when they come immediately below the centre of the wheel. Therefore, since the pressure which a float produces is perpendicular to its surface (*i.e.*, perpendicular to the radius of the wheel), it is only when the floats are passing their lowest point, that the whole of the pressure they exert is utilised

Digitized by Google

in propelling the vessel; in all other positions, it is only the horizontal component of the pressure which exercises any propelling effect, and the greater the obliquity of action, the less is this horizontal component. A large proportion of the power spent in driving paddle-wheels of this form, is wasted in beating and churning the water with the floats, when these are in positions on either side of the vertical line through the centre. The deeper the immersion of the radial paddle-wheel, and the smaller its diameter for a given depth of immersion, the greater is the obliquity of action, and therefore the greater is the loss of efficiency.

Radial wheels are sometimes made in such a way that the floats can be quickly detached and fixed in positions nearer the centre of the wheel. This is advantageous, when from an increased load, the draught of the vessel becomes greater, thus causing greater immersion of the paddle-wheels, since then the diameter of the wheel is reduced, and thus by reducing the immersion of the floats, diminishes the loss from oblique action. This operation is known as *reefing* the paddle-wheels.

Radial wheels, double the diameter of feathering ones, are about equal in efficiency, but then the engine is quite twice as heavy. See American Engine.

Feathering Paddle-Wheels.—This form of paddle-wheel, as illustrated, is designed with the object of getting rid of the disadvantages which arise from the obliquity of action of the radial wheel.

The floats are not fixed rigidly to the radial arms, but are hinged to them, and are provided with levers, G L, so that they may be turned into any position. These levers are connected by rods to a boss or eccentric strap, E, which rotates on a central fixed pin on the sponson beam. This central pin is so placed in relation to the centre of the wheel, that the floats enter the water edgewise, and when in the water, are kept by the levers in a position nearly perpendicular to its surface. The radial arms of the paddle-wheel, F, are forged with small brackets on them at right angles to their lengths, so as to receive the round pins about which the floats hinge.

To find the position of the eccentric pin in order that the floats may enter the water edgewise, and pass through it nearly perpendicular to its surface, the following simple construction is necessary:—Suppose the lower edge, P, of a float to be just entering the water, then, in order that the float may enter edgewise, the resultant of its own velocity of rotation and the horizontal velocity of the vessel, must lie in the plane of the fl
Let, P A, represent the velocity of the vessel, and, P B, th

Digitized by Google

the wheel (drawn tangential to a circle which has, C, as centre, and passes through, P), then, completing the parallelogram, P R

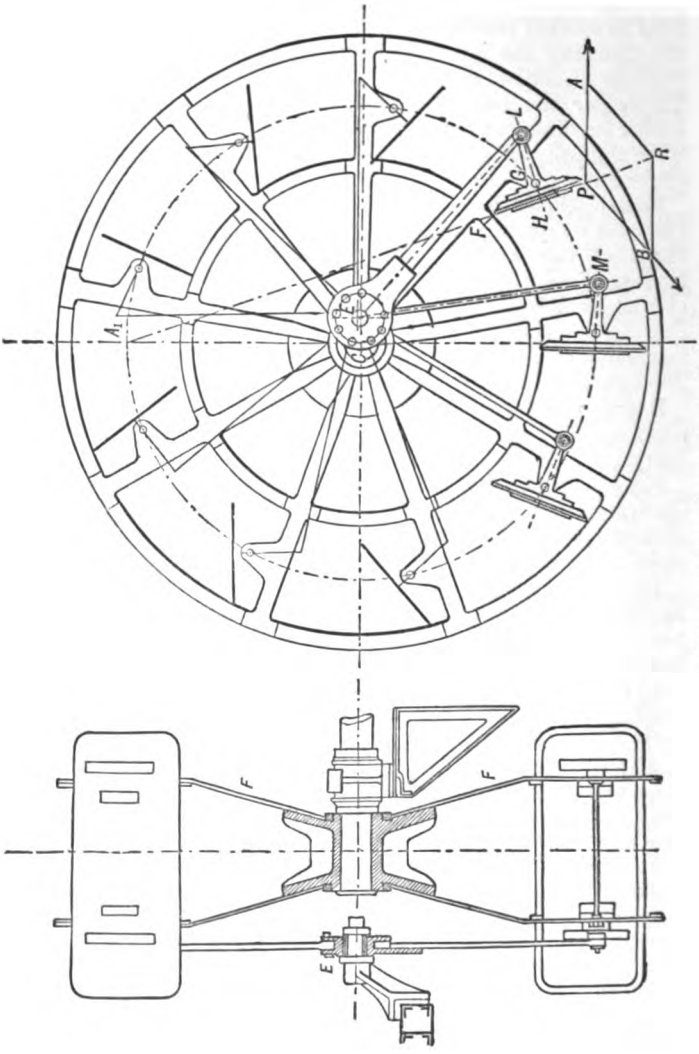

PADDLE-WHEEL WITH FEATHERING FLOATS.

Digitized by Google

is the resultant, and the plane of the float must contain P R. Produce, R P, to cut the vertical through the centre, C, at, A_1, and at right angles to the line, R A_1 (which is the line of the float); lay off, H G, equal to the distance from the face of the float to the centre of the hinge, and, G L, equal to the length of the lever. Now set off in outline another float immediately under the centre of the wheel, with its face perpendicular to the surface of the water, and having the end of its lever at M. With, M, and, L, as centres, and radius equal to, G C, describe arcs intersecting at, E, then, E, is the centre of the eccentric pin. Having thus determined the position of, E, the complete wheel may be drawn down and the proper pitch given to the floats. In actual practice the probable slip of the paddle-wheel has to be taken into account, and, therefore, a smaller circle than that with radius, C G, will be the rolling circle. The floats must, therefore, be so adjusted by moving the eccentric, E, that when entering and leaving the water they shall point to a position on the vertical centre line, considerably higher than the point, A_1, as shown by the right-hand figure. It is, however, advisable to make the floats enter the water a little flatter than the position so calculated for the assumed amount of slips, in order that the pressure of the water shall not come on the forward side of the floats. The speed of the paddle-wheel and of the ship should be carefully compared on the trial trips, and the eccentric shifted, if need be, until the best results are obtained. A considerable increase of speed of certain ships has been recorded by thus finding the most suitable place for the feathering eccentric.

The feathering paddle-wheel, although much more efficient than the radial wheel, is more liable to derangement, since any accident to the feathering apparatus would paralyse the action of the entire wheel. For this reason it did not find general favour when first introduced, but now it is almost universally adopted. It requires to be made specially strong, and all the pins and wearing parts should be cased with brass to prevent corrosion. The boss or eccentric, E, which carries all the rods for feathering the floats, runs loose on the fixed eccentric pin, and is turned round by one specially strong rod, known as the *driving* or *king rod*, shown at L E. The floats for large paddle-wheels are now frequently made of steel and curved slightly concave,)⟶ towards the direction of meeting the water when steaming ahead.

Digitized by Google

Lecture XX.—Questions.

1. Sketch and describe by an index of parts a side and an end view of the general arrangement of diagonal direct-acting engines, as fitted into a river passenger steamer, including the boiler.

2. Why are compound-diagonal direct-acting engines preferred to oscillating or other kinds of engines for shallow river paddle-wheel steamers?

3. Sketch and describe by an index of parts, side views and a plan of a compound direct-acting diagonal engine.

4. Sketch and describe by an index of parts, Joy's valve gear, pointing out its advantages and disadvantages as compared with eccentrics and link-motion.

5. Steamer main shafts often break, or their bearings give trouble by heating, account for this, and describe a plan or plans for alleviating this evil.

6. Sketch and describe a simple radial paddle-wheel. For what reasons has this form of wheel been abandoned?

7. Sketch and describe, by an index of parts, a modern feathering float paddle-wheel. What advantages has it over the older form of paddle-wheel?

8. Describe how you would design and construct the arms, floats, and feathering arrangements for a paddle-wheel.

Digitized by Google

LECTURE XXI.

CONTENTS.—Early Invention of the Screw propeller—Geared Engines—Penn's Trunk Engine—Maudslay's Return Connecting-rod Engine—Horizontal Direct-Acting Engine—Vertical Direct-Acting Engines.

Early Invention of the Screw Propeller.—As we remarked before, when reviewing the early history of the marine engine prior to the beginning of this century, Daniel Bernouilli invented in 1752 a screw propeller which he proposed to drive by a steam engine, and John Fitch experimented with a little screw steamboat on the "Collect" Pond, New York, in 1796. In 1804, Colonel John Stevens of Hoboken, America, completed a steamboat 68 feet long, and 14 feet beam, which he fitted with a water tubular boiler, and a direct-acting high-pressure condensing engine, having a 10-inch cylinder of 2 feet stroke, driving a screw with 4 blades, and of a form which even at the present day appears quite good.*

A model of his boiler, engine, and screw, is preserved in the Mechanical Engineering Lecture Room, at the Stevens' Institute of Technology. In 1805, Stevens built another boat, introducing twin screws. Several other engineers proposed, and some of them tried, screw propulsion, but it was not brought into general use until John Ericsson, a Swedish engineer residing in England, and E. P. Smith, an English farmer, perfected and pushed its introduction in Great Britain, and in America, in 1836-37.

Geared Engines.—Within a few years from this date, the style and speed of steamship engines became entirely altered from what had been used in connection with the paddle-wheel; yet, engineers naturally tried at first to adapt the then existing forms of paddle-wheel engines to drive the screw. The screw has, however, to be run at many more revolutions per minute than the paddle-wheel, and since engineers in those days regarded anything over 200 feet per minute of piston speed as dangerous, or likely to derange their machinery, they preferred to get up the necessary speed by gearing. Thus, beam, side-lever, oscillating, and some of the various other forms of engines already mentioned in Lecture XIX., were made to do duty in driving the screw propeller by means of stepped cog-wheels. Shortly after the successful commercial introduction of the screw as a propeller for

* See Prof. Thurston's *History of the Steam Engine.*

Digitized by Google

merchant ships, the Admiralty were induced to build two ships of the same model and size, viz., the *Rattler* and the *Alecto*, fitted with engines of the same power, but the former was provided with a screw, and the latter with paddle-wheels. A series of competitive trials were made with these two vessels, and the great success of the *Rattler* so satisfied the Admiralty and all engineers of the advantages possessed by the screw, that it very soon came to be generally adopted for ocean-going steamers. By gradual steps and improvements in the arrangement, and construction of the machinery, direct-acting fast-speed engines were adopted, until nowadays a piston speed of 700 feet per minute is not uncommon.

We now propose to briefly notice a few of the most successful styles of screw-driving engines before explaining the screw itself, and in a future lecture we shall describe in full detail a set of compound inverted cylinder vertical engines. In the navy, where the machinery has to be placed below the water line, the three principal types of horizontal engines that have in turn found favour with the Admiralty, are—(1) Trunk, (2) Return Connecting-rod, and (3) Horizontal direct-acting. In the merchant service, the vertical inverted-cylinder direct-acting engine has been generally adopted for the last thirty-five years.

Penn's Trunk Engine.—The difficulty of obtaining a sufficiently long stroke from the direct-acting horizontal engine in the case of a man-of-war, where the engines had to be placed as near the keel of the ship as possible, was solved by Mr. John Penn of

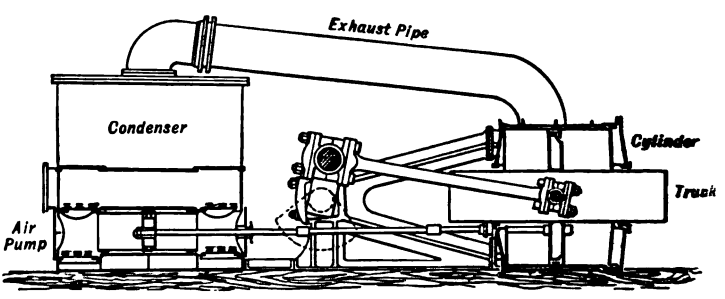

Greenwich. He hinged the connecting-rod direct to the centre of the piston by means of a gudgeon, surrounded by a brass cylindrical case or trunk, concentric with the steam cylinder, as seen in the following figure. This trunk was fixed to the piston, and protruded from each end of the cylinder through stuffing boxes, thereby not only giving additional support to the piston, but also permitting access for oiling the gudgeon and

Digitized by Google

connecting-rod end, and preserving an equal area to the pressure of the steam on both sides of the piston.

Seaton, in his *Manual of Marine Engineering*, says—"This engine is the lightest and most compact of all the forms of marine screw engines, when constructed of the same materials; and for large sizes with the *lower steam pressures*, has been unsurpassed by any other type of engine. The length of stroke is considerably more than that of the ordinary direct-acting engine, and the connecting-rod much longer than that of any other form, being from two and a half to three times the length of the stroke; the weight of the piston is taken by the trunks in a great measure, and there are no piston-rod guides. But with the increase of pressure the defects of this form become more apparent, and lie with the very part that distinguishes it—viz., the trunk.

"The friction of the large stuffing-boxes is very great; in fact, may be so great by unduly tightening the glands as to stop the engine. The loss of heat from the large surface of the trunks being alternately exposed to steam and to the atmosphere, is very great, as is also that from their inner surfaces. The gudgeon brasses are exposed to a very high temperature and liable to become heated, and when heated cannot easily be cooled, as from their position they are not readily adjusted."

Penn arranged his engine so that the direction of motion of its crank when going ahead caused the thrust of the connecting-rod to be upward, and thus, as far as possible, to relieve the bottom of the cylinder from the tear and wear due to the weight of the piston. Some of the largest and most powerful ships in the British Navy have been engined with this Trunk form, such as—H.M.S. *Neptune*, 9000 I.H.P., H.M.S. *Sultan*, *Hercules*, *Minotaur*, *Northumberland*, *Warrior*, *Black Prince*, *Devastation*, &c.

Maudslay's Return Connecting-Rod Engine.—Another modification of the horizontal engine, or rather of the old steeple

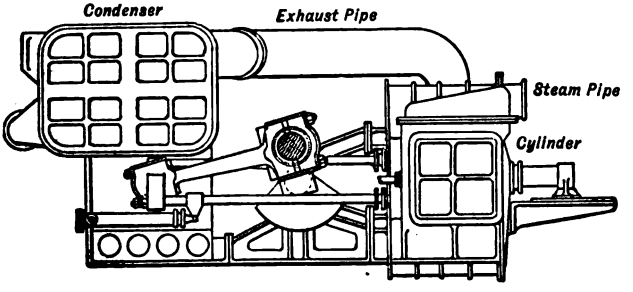

Digitized by Google

form, is that known as the return connecting-rod, by which the same object is attained as in the last type, viz., a sufficiently long stroke and connecting-rod in the narrow cramped space of the hold of a vessel. The general arrangement will be at once understood from the preceding figure.

By the above design, the cylinder may be got close up to the turning range of the crank pin and connecting-rod head, that a longer stroke is obtainable than by any other plan of horizontal engine arrangements. The difficulty in small engines of getting in a small high-pressure cylinder alongside of the larger low-pressure one (with the object of compounding the engines), owing to the necessity for two piston-rods from each cylinder clearing the crank shaft, is overcome in most instances by placing the high-pressure cylinders immediately behind the low-pressure ones—tandem fashion—with one piston-rod only, protruding from behind each of the low-pressure cylinders, and attached to the high-pressure piston. The chief objections urged against this form of engine are—(1) The double piston-rods from the front ends of both cylinders; this entails double the number of stuffing-boxes, and the keeping of the crank shaft bearings from being close to the crank arms. (2) The eccentric-rods are also of necessity very short, unless placed, as is sometimes done, on the same side as the connecting-rod. The engines of H.M.S. *Monarch* and *Raleigh* are of this type, and have four piston-rods to each cylinder.

Horizontal Direct-Acting Engine.—This form of engine having its connecting-rod directly between the piston-rod crosshead (on the cylinder side) and the crank is certainly the simplest and most convenient type for a gun-boat or large naval vessel, where sufficient room can be obtained. Most of the late Admiralty orders are being constructed on this plan, *e.g.*, the *Australia* and *Galatea* by Messrs. Robert Napier & Sons, and the six ships of the *Scout* and *Archer* class* by Messrs. J. & G. Thomson of Clydebank.

They have the same essential parts, and work on the same principle as the compound inverted-cylinder engines which we shall describe in the next lecture; and we only omit explaining and illustrating their distinctive features and details from want of time, space, and diagrams at our disposal.

Vertical Direct-Acting Engines.—The simplest form of marine engine used for small tug-boats and for steam launches at the present time, is that of the compound inverted-cylinder non-condensing type. The following illustration shows the general

* For perspective views and a description of the *Scout's* engines, see *The Engineer*, December 18, 1885.

Digitized by Google

arrangement of one of a pair of these small engines manufactured by Messrs. Alexr. Shanks & Son, of Arbroath; from which it will be seen, that the high and low-pressure cylinders are supported at the back upon two cast-iron columns, and at the front by two wrought-iron stanchions. All four supports are fixed to a strong cast-iron sole-plate, which is bolted to the ship's floors. The back columns form the guides for the cross-heads of the piston-rods. The valve casings are placed on the

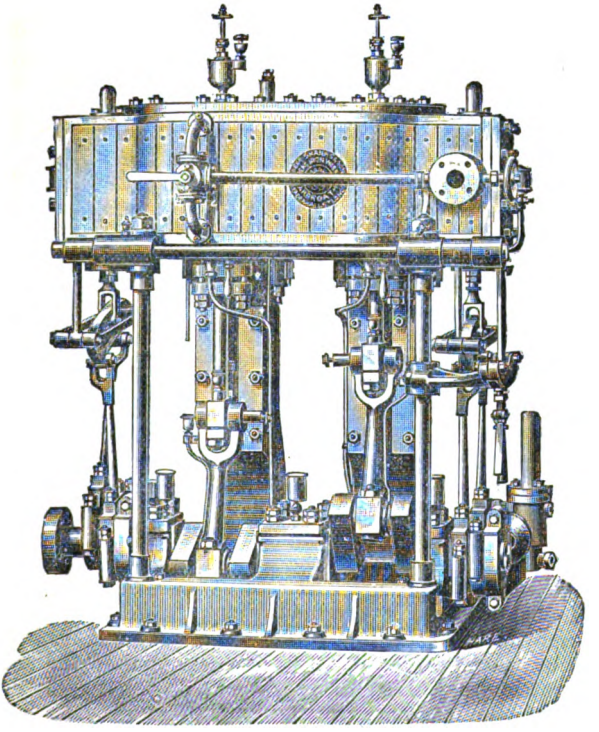

SHANK'S COMPOUND NON-CONDENSING ENGINE.

fore and aft ends of the cylinders, which admits of the slide valves being readily inspected and adjusted. The slide valves are worked and reversed by the ordinary double eccentrics with link-motion. A boiler feed-pump is worked from one end of

Digitized by Google

crank shaft, and a bilge-pump from the other end, both being driven by eccentrics, &c., as shown. The whole of the outside moving parts are easily got at for oiling and for adjustment, and all wearing parts are arranged so that the wear and tear may be readily taken up. It will be observed that the upper ends of both connecting-rods are provided with projecting pins on their inner ends. This is for the purpose of working air and circulating pumps by means of levers, should it be found desirable to work the engines as condensing engines; in which case, a surface-condenser is placed separate from them in some convenient corner of the engine-room. The speed of these engines varies from 230 to 300 revolutions per minute. In Lecture XXVIII. we illustrate and describe the form of boiler considered most suitable for supplying steam to these engines.

The style of engine which has been almost universally adopted in the Merchant Service for the last fifteen years is that known as the "*Inverted Cylinder Compound Surface-Condensing Engine.*" In the attached folding page, we give a front perspective view of a pair of engines of this type, supplied by Messrs. Alex. Shanks & Son, for the S.S. *Eagle*, one of Messrs. Huddart, Parker & Co.'s, of Melbourne Steam Fleet, from which the student will be able to gather a good general idea of the arrangement of such engines before studying in sectional detail the various parts in our next lecture. It will be observed that the engines are started, reversed, and stopped by means of Brown's patent hydraulic starting gear, seen supported vertically at the front centre of the sole-plate. The stop-valve handle is supported by a small wrought-iron bracket fixed to the right hand front column, which column, as well as the corresponding one at the after end, is made of steel, finished bright. An impulse valve for assisting the engineer in starting the engines is fitted to the low-pressure cylinder, and is worked by the aftmost gab-lever opposite the forward connecting-rod. The two intermediate and similarly placed and arranged levers work the water-drain cocks for the high- and the low-pressure cylinders and valve casings, while the fourth or most forward of these handles is used for actuating the throttle valve fixed in the steam pipe between the stop valve and the entrance to the high-pressure cylinder valve casing. Steam gauges communicating with both cylinder valve casings and with the condenser are shown fixed to the wood lagging on the low-pressure cylinder valve casing. Two small wheels are seen just above the stop-valve wheel. One of these opens and shuts the small steam pipe for supplying steam to warm up the whole engine before starting, while the other, or after one, works the donkey engine or steam-winch stop valve.

Digitized by Google

Digitized by Google

THE NEW YORK
PUBLIC LIBRARY

ASTOR, LENOX
TILDEN FOUNDATIONS

Digitized by Google

Lecture XXI.—Questions.

1. On the introduction of the screw as a ship's propeller geared engines were at first adopted, why? What advantages have direct-acting over geared engines?

2. Sketch a section, through the cylinder, air-pump, and condenser of Penn's trunk engine. Describe generally the arrangement of the engine, and show the connection of the piston with the screw shaft. Why is this style of engine being discontinued in the Navy?

3. Describe, with a sectional sketch, Maudslay's return connecting-rod engine, and point out its advantages, and disadvantages. In what class of ships are Maudslay's and Penn's horizontal engines used, and why?

4. What style and arrangement of engine is now being chiefly ordered by our Admiralty, and why?

5. How would you arrange the cylinders for compounding a pair of simple condensing Maudslay's return connecting-rod engines.

6. Give a general outline freehand sketch with concise description of a pair of inverted-cylinder compound non-condensing engines. For what classes of ships is this style of engine suitable, and why?

7. Give a general outline freehand sketch with concise description of a pair of inverted-cylinder compound condensing engines. Indicate and name all the necessary starting and reversing handles, and state how they are manipulated. For what class of ships is this style of engine particularly suitable, and why?

8. Sketch and describe an escape valve as fitted to the cylinder of a marine engine. Why is such a valve required, and where is it placed?

Digitized by Google

LECTURE XXII.

SCREW-PROPELLERS.

CONTENTS.—Generating a Screw Surface—Pitch of a Screw—Length of Screw Blade—Depth of Thread—Angle of Screw—Circumference of Screw—Moulding a Screw—How to find the pitch of a finished Propeller—Early forms—Ordinary form—Griffith's, Hirtsch's, Magin's, and Thornycroft's Screws—Slip of the Screw—Thrust—Negative Slip—Best Diameter, Revolutions and Pitch for a Screw-propeller.

Generating a Screw Surface.—Each blade of a screw propeller may be regarded as a portion of the thread of a screw of great pitch and depth. The following figure illustrates how the surface of a screw-propeller blade is swept up and moulded in the foundry.

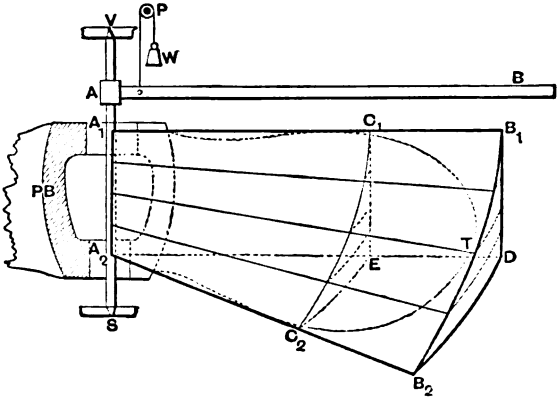

Erect a vertical spindle, V S, held in centres or pivots at, V, and, S, with an arm or loam board, A B, at right angles to the spindle. This loam board is free to move up and down the spindle, V S, as well as to turn round it, owing to its being fitted with a collar at, A. A counter weight, W, attached to a wire or rope passing round a pulley, P, and fixed to a hook on the board or on the collar, A, balances, A B, in any position. Now, suppose this arm to be moved uniformly down the vertical spindle from position, A_1, to position, A_2, and at the same time to be revolved uniformly around it. It is clear, that the outer end of the arm will travel from position, B_1, to position, B_2, and thus trace out a spiral curve. Every r[illegible]long, A B, will trace at

Digitized by Google

the same time a spiral curve, *e.g.*, C_1 to C_2; consequently, the whole surface swept through will be a spiral or screw surface.

Pitch of Screw.—If the board, A B, had made a complete revolution around the vertical spindle while it descended from A_1 to A_2, then the height, $A_1 A_2$, would have been equal to the pitch of the screw; or the distance between two consecutive threads measured parallel to the axis of the screw is the pitch. In other words, it is the forward distance through which the screw would advance in one revolution, if the nut in which it turned were solid and fixed.

Diameter of Screw.—The diameter of a screw propeller is the diameter of the circle described by the tips of the blades when revolving, or 2 $A_1 B_1$ in the figure. The area of this circle is called the *disc area* of the screw.

Length of Screw Blade or Depth of Thread.—The length of blade or depth of thread is the distance from the tip to root of the blade where it enters the boss measured radially.

Angle of Screw.—In screws such as we are now considering, viz., with a constant pitch throughout the blade, the angle of the blade to the vertical axis gradually increases from the tip at, T, towards the root; thus, the angle at the tip or radius, $A_1 B_1$, in the figure is, $B_1 B_2 D$, and this is less than the angle, $C_1 C_2 E$, at the radius, $A_1 C_1$.

Circumference of Screw.—The circumference is 2π times the radius of the blade, or $2\pi \times A_1 B_1$.

If we plot down a vertical line to scale for the pitch, and a horizontal line from the same point to the same scale for the circumference, and join their extremities, then the angle of the screw is represented by the angle contained between the hypothenuse and the base or circumference line; or, the tangent of the angle of the screw = pitch ÷ circumference.

Moulding a Screw.—Referring again to the figure, we now see that all we have to do in order to form the flat or forward surface of a screw-propeller blade is, (1) to erect in the foundry the vertical spindle, V S, with the loam board, A B, and to set up a wooden templet, $B_1 B_2 D$, at the extremity of the radius, having the proper angle to give the desired pitch; (2) to build up with bricks a firm solid backing behind the curved surface, $A_1 B_1 B_2 A_2$, covering it with moulder's loam, sweep it smoothly down with the board, A B, dry it, and wash it down with black carbon wash; (3) to cut away the central part of the curved surface so as to admit of the propeller boss pattern, P B, or the flange (see next figure), and mark off on the curved surface, the contour of the blade, $A_1 C_1 T C_2 A_2$; (4) to fix wooden thickness—piece the following shape ◺ around this curved surface; (5) to

Digitized by Google

the intervening space with loam and dry it; (6) to take a negative impression of this back or curved ⌒ surface of the blade; (7) to remove the thickness pieces and the curved loam between them; (8) to wash down with moulder's carbon wash both the flat and the curved or back surface of the blade mould, and put the halves together, adjust the central core, dry the whole, and pour in the metal.*

How to find the Pitch of a finished Propeller.—(1) Plumb the axis or level points on the blades equidistant from the centre; (2) describe a circle with the axis as a centre on the upper face of the boss; (3) draw a radial line on the boss from the centre in line with the front edge of one blade; (4) lay a long wooden straight-edge (such as, A B, in the last figure), level and fair along this radial line, and measure the vertical distance from its under or straight surface to any desired point, such as, C_1, at a radius, $A_1 C_1$, from the centre; (5) move this straight edge round $\frac{1}{12}$ of the circumference of the circle on the boss, *i.e.*, through an angle of 30°, level it again, and measure at the same radius as before, the vertical distance from its under surface to a point on the blade. Then, since there are 12 inches in a foot, the difference between these two vertical measurements in inches represents the pitch of the screw-propeller blade in feet. This is the practical method adopted in marine engine works.

Early Forms.—The earliest screw propellers were single-threaded screws, and consisted of part of a true helix cut off by parallel planes at right angles to the axis. They were made much longer in the direction of the axis than is general at the present time, and even after double-threaded screws came into use, it was supposed by some that a full turn or more of the thread was necessary in order to form an efficient propeller. Properly speaking, the single-threaded screw had only one blade or arm; but this form of screw was not long in use, and the two-bladed or double-threaded screw was the one which was employed almost without exception for many years. The length was made only about one-sixth the pitch. The usual number of blades in the screw propellers employed at the present time is two, three, or four; and, except in large sizes, the blades are cast along with the boss, which is of a spherical or of an oval shape. The pitch of the blades is usually uniform, but sometimes the pitch of the leading half is made less than that of the following half, so as to make the effort of the blade on the water more gradual. The two-bladed screw propeller is very efficient so long as it is wholly immersed; but in rough weather when the ship pitches, its efficiency rapidly falls off, due to a portion of screw rising out of the water. In war vessels, where the screw

* If the metal is of cast-iron, as much wrought-iron scrap as practicable should be melted with it in order to r[illegible]e blades tough.

Digitized by Google

requires to be raised out of the water while the vessel is under sail, two-bladed screws are necessary and have been frequently used. The three-bladed screw is not now so much used as formerly for large screws, since it is open to the objection that if one blade is broken, the screw is badly balanced and throws serious stresses on the engines.

The four-bladed screw is the one which is now most generally adopted, both in the merchant service and in the navy, when it is not necessary to lift it out of the water.

Ordinary Forms.—The diagram below illustrates the form of screw propeller which is commonly used in practice.

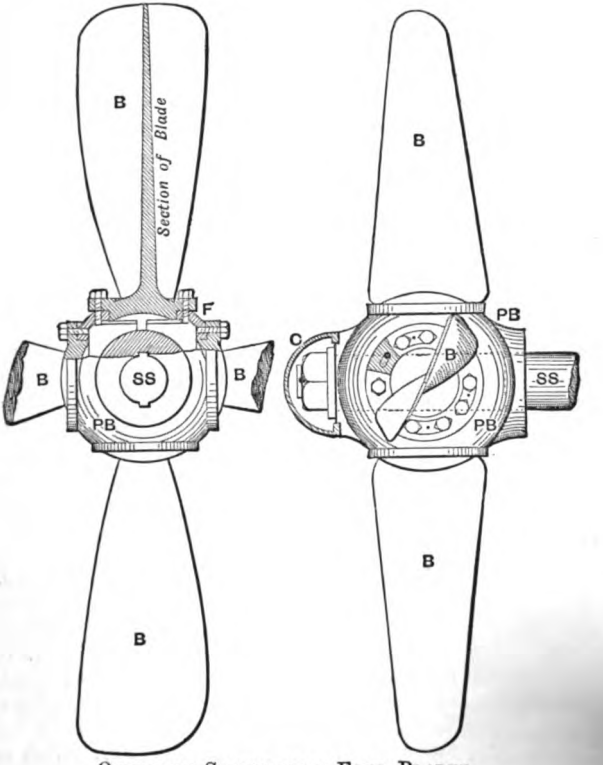

ORDINARY SCREW WITH FOUR BLADES.

PB for Propeller boss.
B ,, Blades.
F ,, Flanges.

SS for Screw shaft.
C ,, Cap for preventing a vacuum forming at after end.

Digitized by Google

The boss, P B, is usually of cast-iron and spherical in form, and has four recesses in it to receive the blades, B. The hole in the boss for the reception of the screw shaft is tapered, and the boss is fixed to the shaft by one or two long keys or feathers which are sunk into the shaft, and fit a key-way in the boss. The boss is prevented from being drawn off endwise by a large nut, which is of opposite screw to the propeller, and usually has a small tapered pin behind it, which passes through the shaft and prevents the nut from slacking back. The nut is prevented from forming a vacuum at after end by a brass or gun-metal cap, C, which is fixed to the boss, as shown in the drawing. The boss is usually forced tightly on the screw shaft by hydraulic pressure or ramming, before the nut is screwed up. The blades of the screw are formed with flanges on their inner ends, and these flanges are faced and bolted in to the recesses formed to receive them in the boss. The holes in the flanges of the blades are not round, but are elongated as is shown on the drawing, so that each blade may be turned round a little, and its pitch altered slightly if required. The spaces between the bolts and the ends of the holes are filled in with small pieces of brass or lignum-vitæ, to prevent the blade from shifting after the pitch has once been adjusted. Thin wrought-iron plates fixed down by a small screw pin are fitted between the nuts which hold down the blades, so as to prevent the nuts from turning. In moderate sizes of screw propellers, the boss is always cast along with the blades; and since there are no nuts or projections on it, it offers less resistance to the water than when the blades and the boss are separate. In the drawing of the screw propeller, the flanges of the blades are shown projecting above the general outline of the boss; but this need not be the case, since the flanges may be rounded on the top (as shown in the Fig.), and recessed down flush with the boss, with the nuts also recessed into the base of the blade. In the best practice large screws are made with a neat metal cap so fitted and fixed to the flanges of the blades as to cover in the heads of the nuts and studs; or, as is sometimes done with cheaper propellers, the projecting angles of the flanges and nuts are smoothed over with a strongly adhering kind of plaster, which resists the action of sea water and prevents corrosion. The great advantage of constructing the screw with the blades separate from the boss is, that if one of the blades

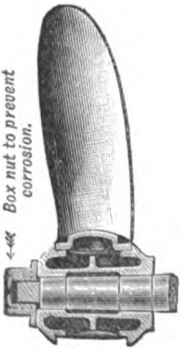

DELTA-METAL SCREW FOR RUSSIAN CRUISER.

Digitized by Google

should be damaged it may be replaced without the expense of an entirely new screw, and without the necessity of taking the ship into dock in order to have the boss forced off. It has, however, been adopted for large vessels only, since it is much more expensive.

The blades of screw propellers were until recently made exclusively of cast-iron; but in modern practice, steel, manganese or phosphor-bronze, and Dick's Delta-Metal have been used, and in most cases with improved results. When the blades are made of steel they may be much thinner than when of cast-iron, and steel being a more ductile as well as a stronger material, they are more reliable. Steel blades are of course more expensive, and corrode more rapidly than iron blades; but, since the thickness of the blades is less, they are more efficient. Blades of phosphor-bronze and of manganese-bronze have proved very efficient, but they are much more expensive than steel blades. They may also be made thinner than cast-iron blades, since the metal is tougher and stronger, and there is no loss by corrosion. They are very smooth on the surface, and the frictional resistance is very small. Messrs. John Elder & Company (The Fairfield Works, Govan) invariably make their propellers of bronze. The propeller for a Russian Torpedo Cruiser, lately built in Sweden, was made of Dick's Delta-Metal, of which the figure at the side on the last page is a section. The inventor claims for this material (which is simply an improved kind of brass), that it resists the action of sea-water, and that the galvanic action is less between it and the iron or steel of the ship than that from bronze. He also claims that it can be made as tough as wrought-iron, and as strong as mild steel, with the further advantages, that it can be forged, stamped, or rolled hot, or worked, drawn, and spun when cold.

Griffiths' Screw.—In the early forms of screw the boss was made very small in diameter, no larger in fact than was absolutely necessary for strength. The roots of the blades were consequently almost close to the shaft, and therefore in the case of screws with large pitch, nearly in a fore and aft direction, or at right angles to the plane of rotation. The effect of this was to throw off the water at the roots nearly at right angles to the shaft, thus adding very little to the propelling effect. A considerable amount of power was expended in simply churning the water, besides seriously disturbing the water upon which the outer and more effective portion of the blades had to act. The ends of the blades were very broad

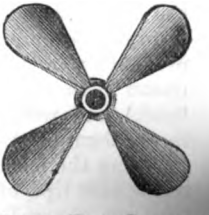

SMALL BOSS SCREW.

Digitized by Google

square, and thus absorbed a good deal of power by surface friction. To obviate these defects, Mr. Robert Griffiths devised his well-known propeller which is very much used in large first-class steamers and in the Navy. It has three

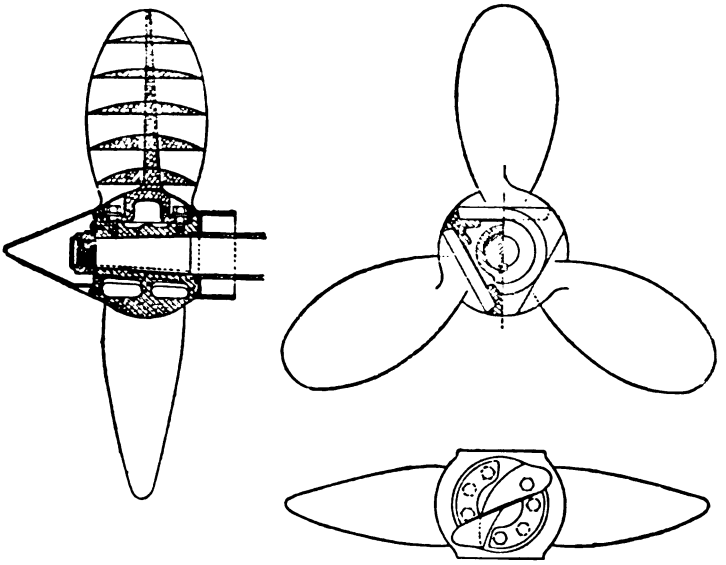

GRIFFITHS' SCREW.

important features. The first of these is the very large spherical boss. Mr. Griffiths originally had the boss made $\frac{1}{3}$ the diameter of the whole screw; but now it is seldom made more than from $\frac{1}{4}$ to $\frac{1}{5}$ of the diameter. The use of such a large boss will at once be understood from what we have said about the early forms of screws. It fills up the space that was formerly occupied by the useless inner portions of the blades, prevents wasteful agitation of the water at the centre (for the round boss revolves quietly, and causes little frictional resistance), and reduces the vibration. The second improvement is in the form of the blades, which are tapered off at the tips, thus reducing the former loss from friction. In the original Griffiths' screw the tips of the blades were bent slightly forward; now they are generally straight, and are sometimes bent backwards. The third improvement which resulted directly from the first, is that the heads of the nuts and studs can easily be covered in by

Digitized by Google

a neat metal cap, and that there is plenty of room for admitting of the adjustment of the pitch to the required amount. This is an important consideration; for it is sometimes difficult to hit upon the best pitch for a vessel until after she has been tried, and it is extremely convenient to be able to alter the angle of the screw-blade without having to make a new propeller.

Hirsch's Screw.—In this propeller there are generally four blades, which are curved towards the direction of rotation like the hands of a man in the act of swimming, or like the point of an oar. It is advocated that this curved form of blade diminishes the vibration of the screw, and arrests the tangential force of the water, thus throwing the water more directly sternwards than an ordinary straight blade does. The pitch is not uniform throughout the blade, but increases towards the point, and towards the root; whilst the following side of the blade has a somewhat less pitch than the leading side, so as to let the water escape more freely sternwards.

Mangin's Screw.—This propeller consists of two sets of blades, the one being placed immediately behind the other, and fixed to the same boss. There is consequently a space between the forward and the after set of blades. It is supposed not to rotate the water so much as a propeller with one set of blades; and when a ship is under sail with the propeller fixed, there is not so much resistance as with an ordinary two-bladed one of the same power, since the transverse section of the former is only about one-half that of the latter.

Thornycroft's Screw.—This screw, which has been very successful in torpedo boats, for which the inventor's firm is famous, was thoroughly described, along with a series of interesting experiments, by Mr. Sidney W. Barnaby, M.I.N.A., in a course of lectures delivered in 1885 at the Royal Naval College, Greenwich.*

It has broad short blades so as to obtain the necessary blade surface, and at the same time to keep the propeller completely immersed below the surface of the water, which is difficult to attain with the ordinary form of blade, owing to the small draught of the torpedo boat. So long as a propeller is immersed sufficiently far below the surface of the water to prevent it drawing in air, any further immersion within the limits obtainable in a ship, has little beneficial effect, for the speed with

* Mr. Barnaby has issued these lectures in book form, published by Messrs. E. & F. Spon, under the heading "Marine Propellers," which should be carefully perused by all students interested in the construction of steamers. We are indebted to him for our brief description and sketch of Thornycroft's screw, as well as for the Figs. of Griffiths' screw.

Digitized by Google

which water can follow up the blades of a screw depends upon the direct vertical pressure on the water; and, since the pressure of the atmosphere corresponds to a head of 34 feet of water, a few feet more due to immersion of the blades in the water has but a corresponding effect. Messrs. Thornycroft and Barnaby, in their experiments with a model Thornycroft screw, found

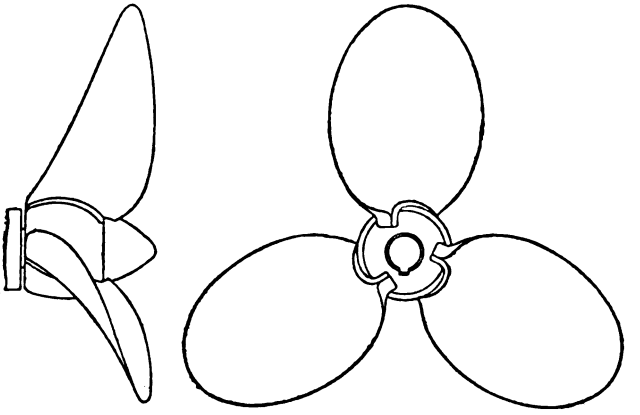

THORNYCROFT'S SCREW.

that the efficiency fell from 70 to 50 per cent. when the screw-blades were permitted to break the surface of the water.

Thornycroft's propeller has at the middle of the blades an increasing pitch, gradually becoming uniform towards the tips and towards the roots. The reason for adopting this is, that if the water be accelerated too much, it turns round the points to the back of the blades, and the rotation of the water being naturally greatest towards the roots owing to the angle of the blade there, it is not advisable to increase this evil effect. The blades are inclined sternwards, and are slightly concave on the driving side, in order to restrain the centrifugal or tangential force of the water, and throw it as far as possible fair astern. Since this centrifugal action is naturally greatest at the root, owing to the greater angle of the blades, the inclination and curvature given to the blades is greatest near the roots.

Many other forms of screw propellers have been devised, but we have given those in general use. Feathering propellers have often been proposed and tried, but the mechanism required to enable the screw to be properly feathered, *i.e.*, to turn the blades in a fore-and-aft direction when the ship is under sail, is liable to get out of order, and is only adopted under exceptional

Digitized by Google

cases, such as yachts or sailing ships requiring auxiliary power. Twin screws are used where the draught of water of the ship will not permit of a single screw of sufficient diameter being used for the required horse-power, and where quick turning and manipulation of the ship's movements are advisable, as in a man-of-war or in a telegraph cable ship.

Slip of the Screw.—If the screw worked in a solid unyielding nut, then the distance travelled by the ship in a given time would be equal to the number of revolutions made by the screw in that time, multiplied by the pitch of the screw. But the water which forms the nut for the screw propeller is not unyielding. The result is, that the ship does not progress a distance equal to the pitch of the screw for each revolution. The difference between the speed of the ship and the speed of the screw (*i.e.*, the pitch × the number of revolutions), is termed the "*slip*" of the screw. This, however, is only the *apparent slip*; in order to find the *real slip* of the screw, the velocity of the stream of water which always follows a ship, and in which the screw works, must be known. When a common screw works in a solid nut, it advances for each revolution a distance equal to the pitch of the screw, and the nut remains stationary; but when the nut is formed of a yielding medium such as water, then the screw slips. The water does not remain stationary during the rotation of the screw, but is projected backward by the screw in a direction opposite to that in which the ship is travelling. The *actual* velocity of this column of water thrown back by the screw therefore represents the true or *real slip* of the screw.

Thrust.—When a screw steamer is moving forward at a uniform speed, the reaction of the mass of water projected backwards by the propeller is exactly equal to the resistance opposed to the forward motion of the vessel. It is, therefore, absurd to attempt to get a screw propeller to work without any slip, for if there was no real slip, then there would be no resultant propelling reaction.

If W = weight of water acted on in lbs.
S = slip of screw in feet per second.
g = acceleration due to gravity = 32·2 feet per second.

$$\text{Reaction} = \frac{WS}{g} \text{ in lbs., urging the vessel forward.}$$

Or, this is the thrust of the screw on the ship along the line of screw shafting in pounds. Professor Rankine in his *Rules and Tables*, p. 275, Rule V., reduces the above equation to a more convenient form for practical use, viz.:—*To calculate the thrust of*

Digitized by Google

propelling instrument (jet, paddle, or screw) in pounds; multiply together the transverse sectional area in square feet, of the stream driven astern by the propeller; the speed of the stream relatively to the ship in knots, the real slip, or part of that speed which is impressed on that stream by the propeller also in knots; and the constant 5·66 *for sea water, or* 5·5 *for fresh water.*

Thus—

Let A = Area of stream driven back in square feet.
S = Speed of screw in knots per hour.
s = Speed of ship „ „
$\therefore$ S − s = Apparent slip.

Then—

The thrust in pounds = A × S (S − s) 5·66.

Example.—Find the thrust of a screw propeller, 16 feet diameter, having a boss 4 feet diameter, when driving a ship at 15 knots an hour; the slip of the screw being 10 per cent.

$A = \pi (r_1^2 - r_2^2) = 3{\cdot}1416\,(8^2 - 2^2) = 188{\cdot}5$ square feet.
s = 15 knots.
S = (90 : 100 : : 15 knots : S) = $16{\cdot}\dot{6}$ knots.
$\therefore$ A × S (S − s) 5·66
= $188{\cdot}5 \times 16{\cdot}\dot{6}\,(16{\cdot}\dot{6} - 15)\,5{\cdot}66 = 29{,}630$ lbs.

Negative Slip.—In every screw propeller, as we have already shown, there must be a certain amount of actual or real slip, due to the yielding nature of the water which forms the nut for the screw. The curious phenomenon of negative slip, or, in other words, the speed of the screw being less than that of the ship, has received a good deal of attention from various writers on the screw propeller, and has given rise to various theories on the subject, but in reality there can be no such thing, if we duly take into account all the circumstances. Some have attributed the observation of negative slip to a wrong determination of the effective pitch of the screw, which is rather a difficult thing to measure accurately in the case of a screw having a variable pitch; others have tried to explain it by pointing out that the screw works in the "wake," or disturbed stream of water which follows and rushes in to fill up the space left by the ship when moving forward, so that the velocity of the ship with respect to this following body of water is less than the real velocity of the ship, with respect to the dead water some distance away from her. Whatever may be the true cause of negative or rather apparently negative slip (and which is more apparent with some ships and with some forms of pro-

Digitized by Google

pellers than others), one thing is certain, that, should it be observable, it is a sign that the screw is not working efficiently; and the sooner it is changed for one that will give a moderate but not an excessive amount of real slip (say from 10 to 15 per cent.) the better.

Best Diameter Revolutions and Pitch.—Mr. Barnaby, in his *Treatise on Marine Propellers* (p. 49), points out, "that in designing the propelling machinery for a new vessel, the thing to start with is the size of the propeller, and not the size of the engines. The engines exist only to drive the propeller, and should be subordinated to it. Having therefore a given speed of vessel and a given horse-power to start with, fix upon the diameter of the propeller, then upon the revolutions suitable for that propeller. With these things fixed it is then easy to find the size of the engine. It is an entire reversal of the proper process to say, 'I will run my engine at such and such a speed, and make a propeller to suit.'" He gives the following rules* for finding the diameter and revolutions:—

Take the data from an actual propeller driving a ship of certain proportions which is known to give a good performance, and treat the same as a model for the new vessel having similar proportions.

The diameter is proportional to the $\sqrt{I.H.P.}$, and inversely proportional to the square root of the cube of the speed.

Example—

Let d = diameter of model propeller = 5·0 feet.
D = diameter of required propeller.
p = I.H.P. of the model propeller = 670.
P = I.H.P. of required propeller = 1800.
v = speed of vessel with model propeller = 18 knots.
V = " " required " = 20 "

Then—

$$D = \sqrt{d^2 \times \frac{P}{p} \times \frac{v^3}{V^3}}$$

$$= \sqrt{5^2 \times \frac{1800}{670} \times \frac{18^3}{20^3}} = 7 \text{ feet (if model smaller).}$$

Or $$\frac{D}{d} = \sqrt{\frac{P}{p} \times \frac{v^3}{V^3}} = \sqrt{\frac{1800}{670} \times \frac{18^3}{20^3}} = 1{\cdot}4$$

$\therefore$ $D = 1{\cdot}4\ d = 1{\cdot}4 \times 5 = 7$ feet.

* The advanced student should also study the rules given by Seaton in his *Manual of Marine Engineering*, pp. 288–297.

Digitized by Google

The revolutions per minute are proportional to the speed, and inversely proportional to the diameter.

Using the same letters and data as above.

Let r = revolutions per minute of model propeller = 400.

R = " " required "

Then—

$$R = r \times \frac{V}{v} \times \frac{d}{D}$$

$$= 400 \times \frac{20}{18} \times \frac{5}{7} = 318 \text{ revolutions.}$$

If the model used is larger the ratios are reversed.

$$\therefore r = 318 \times \frac{18}{20} \times \frac{7}{5} = 400 \text{ revolutions.}$$

The pitch of the propeller should then be made the same ratio to the diameter as in the model. The pitch should never exceed $2\frac{1}{2}$ times the diameter.

LECTURE XXII.—QUESTIONS.

1. Describe briefly and show by a sketch, the method of moulding a screw-propeller blade.
2. Define the pitch, length, angle, and circumference of a screw propeller, as well as the depth of thread, and exemplify them by means of sketches.
3. How would you find the pitch of a finished screw-propeller blade?
4. Sketch and describe by an index of parts an ordinary modern four-bladed screw propeller. How may a blade be replaced by a new one without unshipping the propeller? How can the pitch of a blade be altered within limits, and of what advantage is this device to the engineer?
5. Sketch and describe Griffiths' screw. What important advantages has it over the older forms of screw propellers; and why?
6. Describe the general arrangement of Hirtsch's and Magin's screw propellers.
7. Sketch and describe Thornycroft's torpedo-boat propeller, and give the reasons assigned for adopting this form.
8. What is meant by the slip of a screw? Distinguish between apparent and real slip. Can there be any such effect as negative slip; if so, how; if not, why not?
9. How is the thrust from a screw propeller calculated? Find the thrust from a screw, whose slip is 10 per cent. and the speed of the ship 12 knots; the diameter of screw is 14 feet; and that of the boss 3 feet. *Ans.* 14,790 lbs.
10. Show how to find the best diameter, revolutions, and pitch for a screw propeller. Taking as a model the example given in the lecture, find the diameter, revolutions, and pitch for a ship's propeller of 2000 I.H.P., having a speed of 15 knots. *Ans.* 11·3.
11. When designing the machinery for a new vessel, what data should be given, what should first be determined, and why? A ship attains a speed of 16 knots per hour, the mean pitch of the screw is 18 feet, and the number of revolutions per minute 88, what is the slip per cent.? Is it positive or negative? *Ans.* 37 feet per minute, and negative.

Digitized by Google

LECTURE XXIII.

COMPOUND MARINE ENGINES.

CONTENTS.—Description and complete specification of the engines of the S.S. *St. Rognvald*, built and engined by Messrs. Hall, Russell & Co., Aberdeen.

As an example of compound marine engines in general use at the present time, and the arrangement of these with their boilers in the ship, we give in this chapter a number of diagrams illustrating the engines* of the S.S. *St. Rognvald*, made by Messrs. Hall, Russell & Co., of Aberdeen, in 1884. A complete specification of these engines will be found at the end of this chapter. They are of the two-cylinder compound type, and indicate fully 1,500 horse-power. The high-pressure cylinder is 36 inches diameter, and the low-pressure cylinder 70 inches diameter, both with a stroke of 4 feet, and the steam pressure is 90 lbs. per square inch.

The steam enters the valve casing of the high-pressure cylinder by the stop valve, S V, and is admitted to that cylinder by the slide valve, S V_2. Full steam is admitted to the cylinder for a portion of the stroke, until the expansion valve cuts off the supply. After this point, the work of moving forward the piston is performed by the expansive force of the steam, and the steam falls in pressure and temperature from this point to the end of the stroke. At the end of the stroke the steam is exhausted through a belt or passage round the high-pressure cylinder (shown in the plan and side elevation), into the casing of the low-pressure cylinder. The casing of the low-pressure cylinder, along with the exhaust passages from the high-pressure cylinder, forms the receiver of the engine, and when the steam exhausts into this receiver its pressure falls by expansion, since the volume of the receiver is greater than that of the high-pressure cylinder.

* Diagrams of the boilers of this vessel with a complete description will be found in Lecture XXVIII. We are indebted to Mr. John Scott, managing partner of the engineering department in the above firm, now head partner of Messrs. John Scott & Co., shipbuilders and engineers, Kinghorn and Kirkcaldy, for the diagrams and specification. Advanced students should refer to *The Engineer*, August 6, 1886, for a complete set of engravings and description of the Triple-Expansion Engines of the S.S. *Matabele*, by Messrs. Hall, Russell & Co.

Digitized by Google

FRONT ELEVATION.

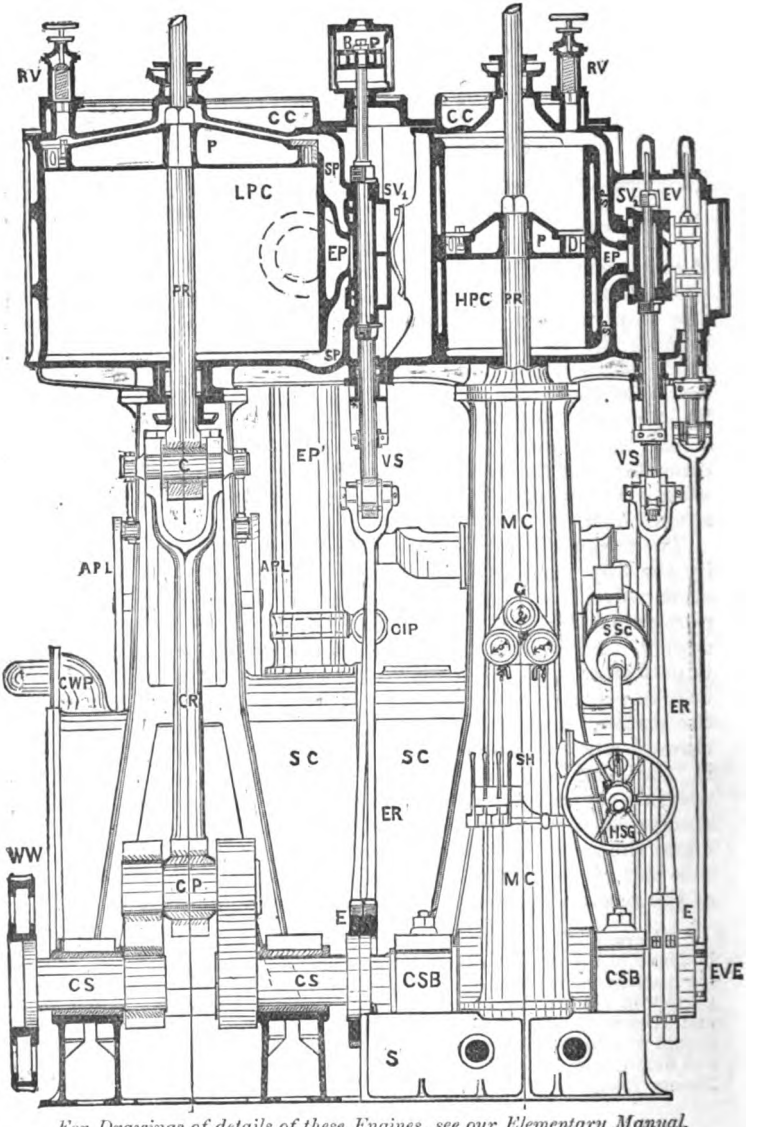

For Drawings of details of these Engines, see our Elementary Manual, Lectures XXI. to XXV.

Digitized by Google

SIDE ELEVATION.

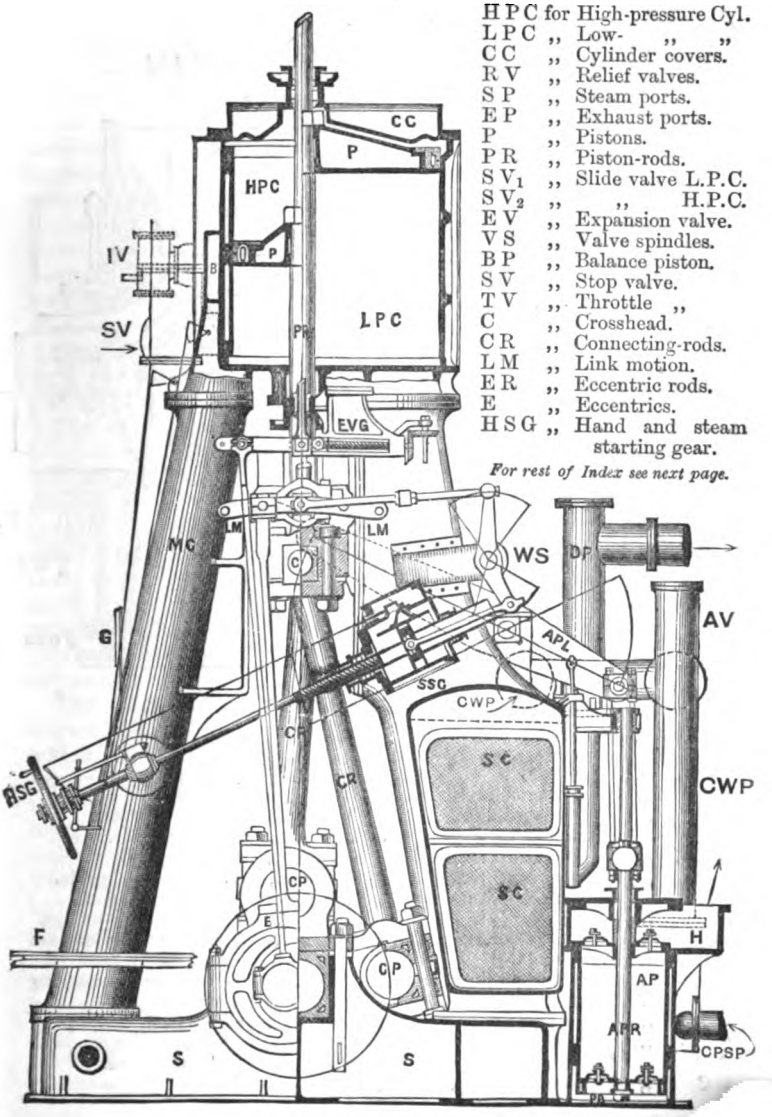

INDEX TO PARTS.

H P C	for	High-pressure Cyl.
L P C	,,	Low- ,, ,,
C C	,,	Cylinder covers.
R V	,,	Relief valves.
S P	,,	Steam ports.
E P	,,	Exhaust ports.
P	,,	Pistons.
P R	,,	Piston-rods.
$S V_1$	,,	Slide valve L.P.C.
$S V_2$	,,	,, H.P.C.
E V	,,	Expansion valve.
V S	,,	Valve spindles.
B P	,,	Balance piston.
S V	,,	Stop valve.
T V	,,	Throttle ,,
C	,,	Crosshead.
C R	,,	Connecting-rods.
L M	,,	Link motion.
E R	,,	Eccentric rods.
E	,,	Eccentrics.
H S G	,,	Hand and steam starting gear.

For rest of Index see next page.

Digitized by Google

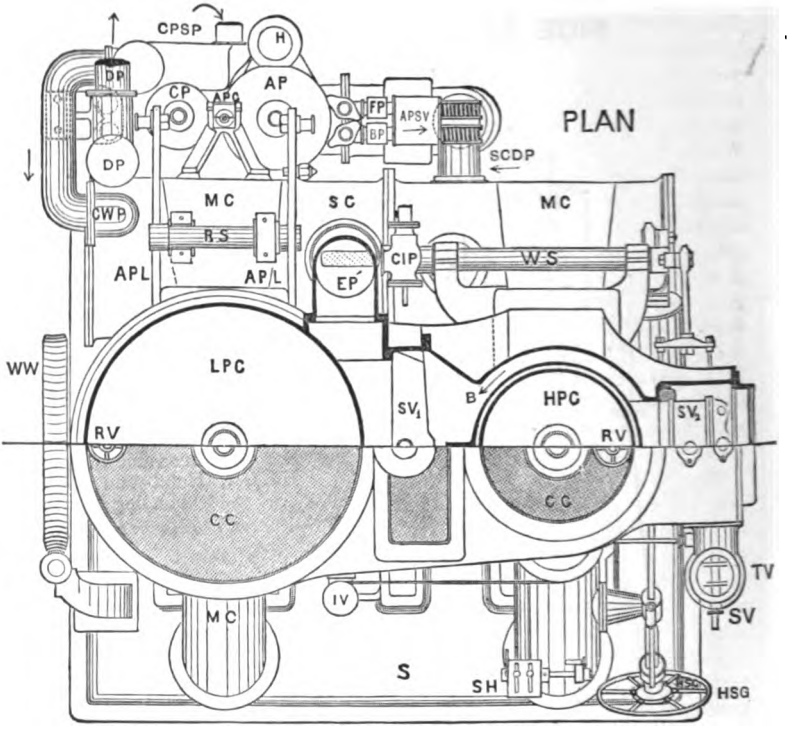

PLAN OF S.S. "ST. ROGNVALD'S" ENGINES.

INDEX TO PARTS.—*Continued.*

S S C	for	Steam starting cylinder.	H	for	Hot-well.
W S	,,	Wyper shaft.	A P L	,,	Air-pump levers.
E V G	,,	Expansion valve gear.	R S	,,	Rocking Shaft.
E V E	,,	Expansion valve eccentric.	A P R	,,	Air-pump rod.
			A P G	,,	,, ,, ,, guide.
S H	,,	Starting handles.	P B	,,	,, ,, bucket.
S	,,	Sole-plate.	F P	,,	Feed and bilge pumps.
M C	,,	Main columns.	G	,,	Gauges, steam, vacuum and receiver.
E P'	,,	Exhaust pipe.			
S C	,,	Surface condenser.	W W	,,	Worm wheel for turning gear.
F	,,	Flooring.			
C S	,,	Crank shaft.	C W P	,,	Circulating water pipe.
C S B	,,	,, ,, bearings.	C I P	,,	Common injection pipe.
A P	,,	Air pump.	D P	,,	Discharge pipe.
C P	,,	Circulating pump.			

Digitized by Google

This fall of pressure is an apparent source of loss to the system; but since the steam while expanding into the receiver does no work, it cannot lose heat except that given off by radiation and conduction, which is as far as possible prevented by the lagging, and therefore if it fall in pressure it must become superheated. Whilst expanding in the low-pressure cylinder it will not be so liable to liquefaction, and will be more efficient than ordinary saturated steam, so that theoretically there should be no loss due to this receiver. The steam is admitted to the low-pressure cylinder by the double-ported slide valve, S V_1. The expansion is completed in this cylinder, and the remaining available energy given up by the steam. From the low-pressure cylinder it is discharged through the exhaust pipe, E P', into the surface condenser, S C, and is there condensed in the manner explained in Lecture X. When condensed, it falls to the bottom of the condenser, and is pumped by the air pump, A P, into the hot well, H, from which it is drawn off by the feed pumps, F P, and forced back into the main boilers.

The high-pressure cylinder is fitted with variable expansion gear, so that the point of cut-off of the steam may be changed to suit circumstances. The variation of the point of cut-off, is effected by means of the expansion valve gear arrangement shown at, E V G, in the end elevation, by which the travel of the valve may be altered. In the low-pressure cylinder the weight of the slide valve, together with the valve rod, links, and eccentric rods, is supported by a small balance piston, B P, fitted to the upper end of the valve rod, so that what would otherwise cause great pressure and consequent friction between the eccentrics and their straps and other points, is considerably diminished.

The steam starting gear, S S G, is very simple, and is clearly shown in the side elevation. It consists of a small steam cylinder, which is bolted to the side of the forward condenser column, and has a trunk piston fitted to it. One side of the piston is attached by a small connecting-rod to one end of a bent lever, this lever being connected at its other extremity, to the centre of reversing link motion, L M, of the high-pressure cylinder, and another lever which is attached to the same wyper shaft, W S, being connected to the link motion of the low-pressure cylinder. The other end of the piston, which is also of the trunk form, is screwed with a very fast pitched thread to fit the screw on the round rod to which the reversing or hand-starting gear wheel, H S G, is attached. This reversing wheel is loose upon the rod, but may be attached to it by means of a clutch which is fitted to the rod. The slide valve of this steam starting cylinder is worked by hand, and by admitting steam to one end of it, the links of the main slide valve

Digitized by Google

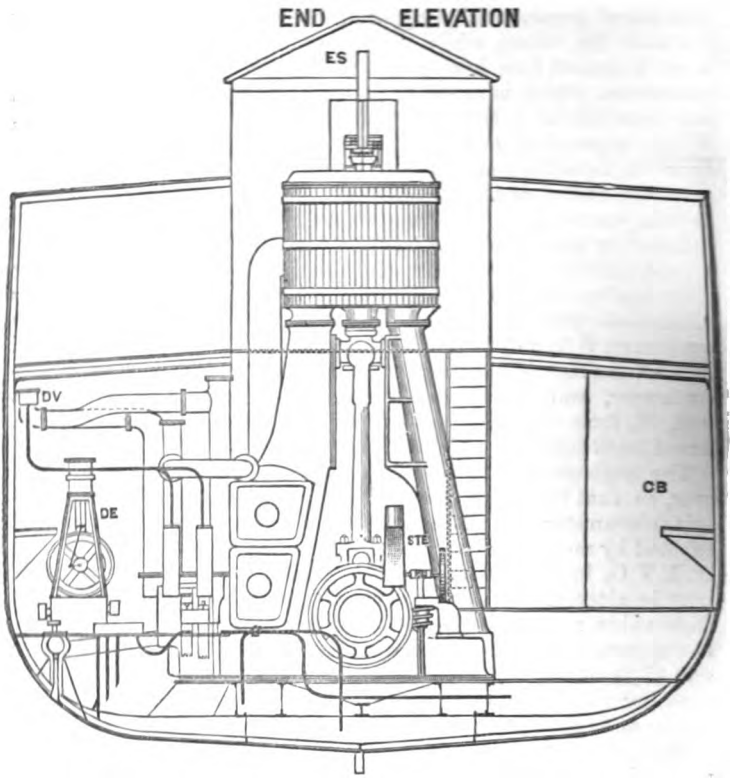

END ELEVATION OF S.S. "ST. ROGNVALD."

INDEX TO GENERAL ARRANGEMENT.

See above and next Three Figures.

C B	for	Coal bunkers.
M B	,,	Main boilers.
B S	,,	Boiler seatings.
B F	,,	,, furnaces.
V	,,	Ventilators.
U	,,	Uptakes.
F	,,	Funnel.
S D	,,	Steam dome.
$S V_1$	,,	Stop valves.
$S V_2$	,,	Safety valves.
M S P	for	Main steam pipe.
E	,,	Engines.
S T E	,,	Steam turning engine.
D B	,,	Donkey boiler.
D E	,,	,, engine.
D C	,,	Distribution chest.
F P	,,	Feed pipes.
D V	,,	Discharge valves.
E S	,,	Engine-room skylight.

Digitized by Google

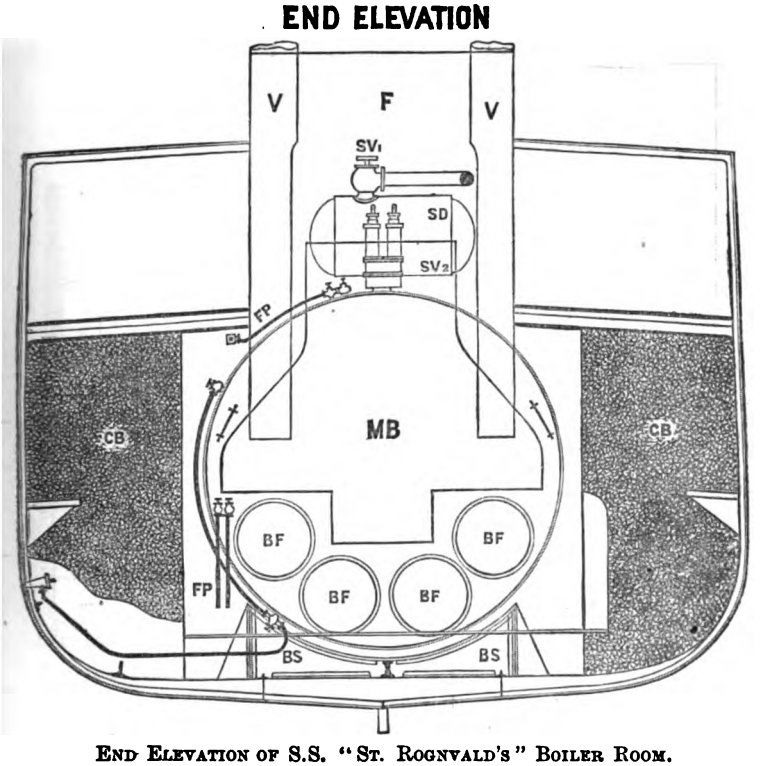

END ELEVATION OF S.S. "ST. ROGNVALD'S" BOILER ROOM.

gear may be moved at pleasure, and the valves thrown into gear with the ahead or the astern-going eccentrics. In order to reverse by hand, it is only necessary to throw the clutch into gear with the reversing wheel, and to revolve the wheel, when the piston which is prevented from turning, is moved directly by the action of the screw. In reversing by steam, the piston presses against this screw on the rod, and the pitch of the screw being great, it causes the rod to revolve, but the reversing wheel does not revolve since the clutch is not in gear.

The air pump, circulating pump, feed and bilge pumps are all worked by the levers, A P L, which are attached to the crosshead C, of the low-pressure cylinder.

An ordinary condenser injection pipe, C I P (see plan), with a rose on its end, is fitted to the exhaust pipe, E P, close to the

Digitized by Google

SIDE ELEVATION

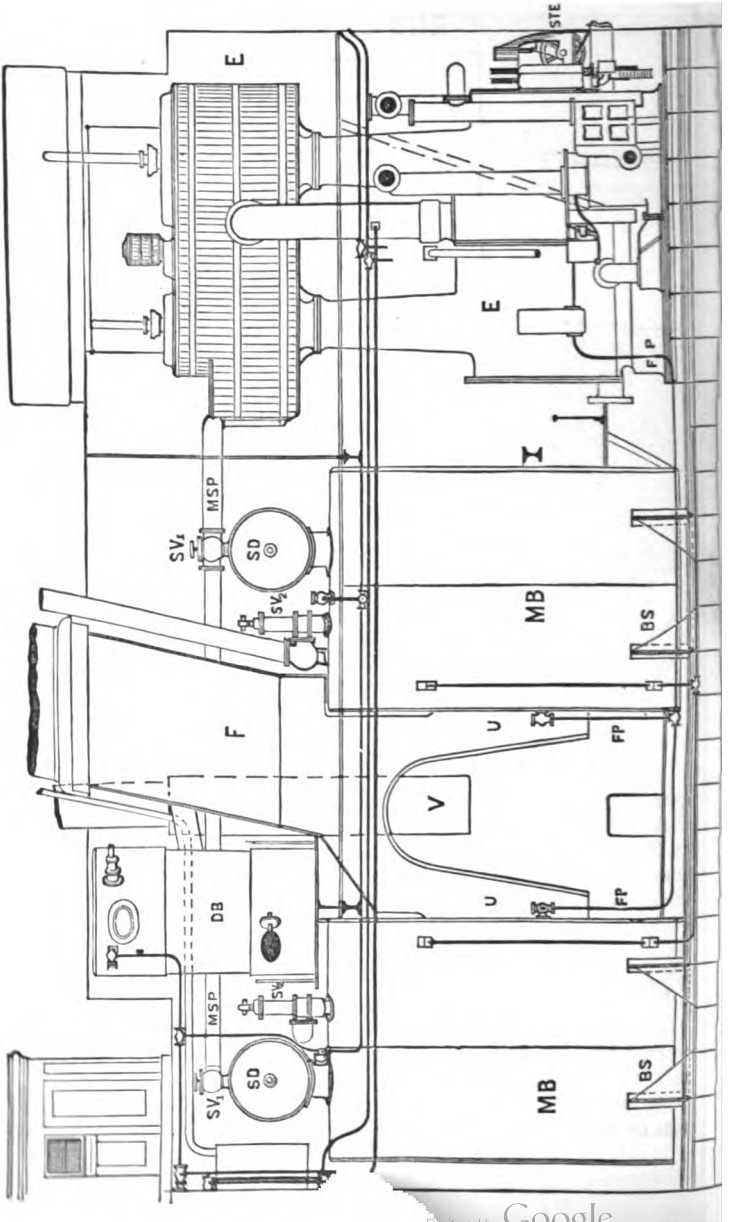

Digitized by Google

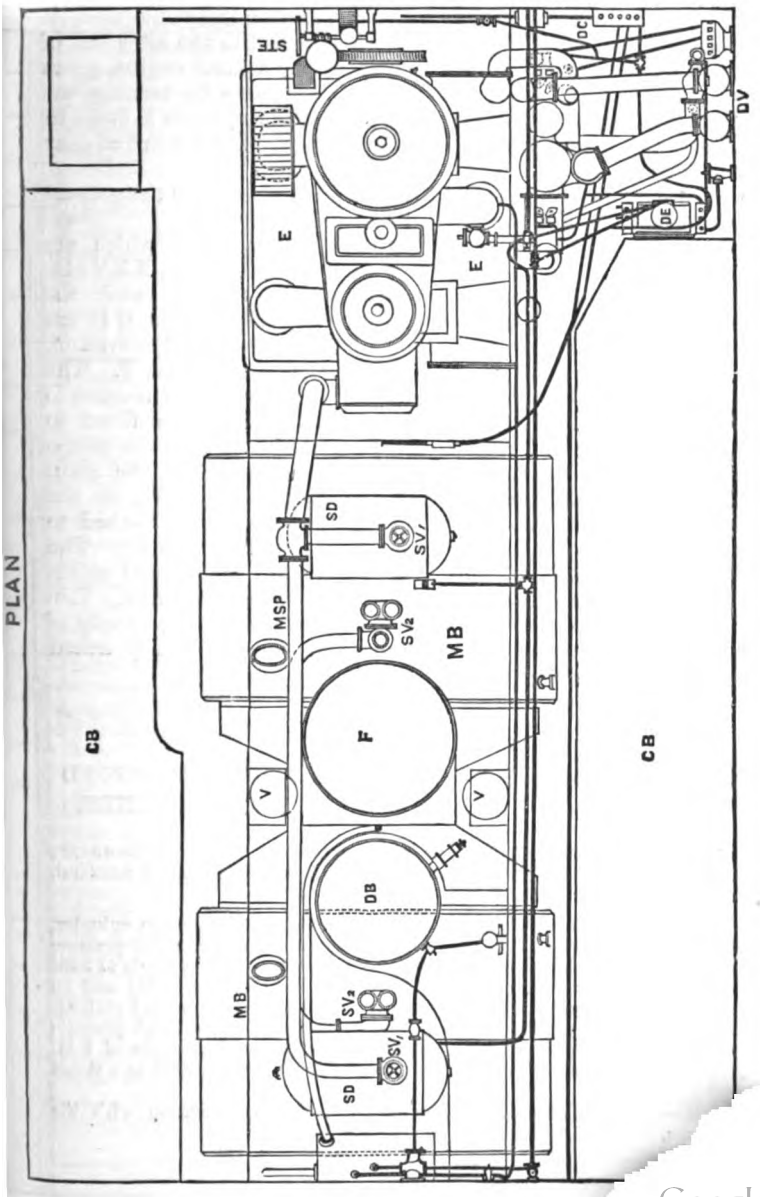

Digitized by Google

of the condenser, so that jet condensation may be used if necessary. A worm wheel, W W, is attached to the after end of the crank shaft, C S, and a worm, driven by a small engine, gears with this wheel. This arrangement is necessary for turning the engines while the vessel is lying in port, and the worm is fitted in such a way that it may be easily and quickly thrown out of gear when the main engines are working.

The diagrams on pages 238 to 241, illustrate clearly the general arrangement of the engines and boilers in the vessel.

There are two single ended main boilers, M B, which are fully described with complete diagrams in Lecture XXVIII. The boilers are situated forward of the engines, with the furnaces, B F, facing each other; and the coal bunkers, C B, are fitted up the sides of the vessel, as shown in the end elevation. The uptakes, U, unite immediately below the funnel, F. The boilers rest upon wrought-iron seats, B S, which are riveted to the ship's floor. Two spring safety valves, S V_2, are fitted to each boiler, and both sets of valves are connected with the escape pipe for waste steam at the back of the funnel. The main steam pipe, M S P, passes from the stop valves, S V_1, on the domes of the boilers, into the engine-room, and is attached to the stop valve outside the high-pressure cylinder casing. The donkey boiler, D B, for supplying the donkey pumps and steam winches, is fitted on cross beams above the main boilers. Two ventilators, V, are fitted above the stokehold for the supply of fresh air. The several pipe connections may be clearly traced from the diagrams given.

SPECIFICATION OF INVERTED CYLINDER COMPOUND DIRECT-ACTING SURFACE CONDENSING ENGINES.

Designed and constructed in 1884 by Messrs. HALL, RUSSELL & COMPANY, Aberdeen, for the S.S. *St. Rognvald*, belonging to the North of Scotland, Orkney and Shetland Steam Shipping Company.

1. *Cylinders.*—To have one high-pressure and one low-pressure cylinder, the high-pressure cylinder to be 36 in. in diameter, and the low-pressure cylinder 70 in. diameter, each with a stroke of 4 feet. To be made of hard close grained cast-iron, strongly ribbed and feathered on sides and on bottoms, of a minimum thickness of 1¼ in., with escape valves and stuffing-boxes fitted at top and bottom of each cylinder. The high-pressure cylinder to have a cast-iron liner, 1⅛ in. thick, fitted with a space of 1 in. between it and outside casting, the space thus formed to be used as a steam

Note.—Students should carefully compare this specification with the drawings.

Digitized by Google

jacket if required. This jacket space to have a water trap fitted below the level of cylinder bottom with a gauge glass at least 18 in. long, with suitable brass cocks (asbestos packed). The water from trap to be taken into hot well by a copper pipe, $\frac{3}{4}$ in. diameter, having a brass stop valve for regulating the flow of water. The cylinders and valve casing sides to be covered with silicate of cotton, 2 in. thick, and lagged with teakwood in strips 3 in. broad, and secured by brass straps and screws. The bore of each cylinder to be made so that the packing rings of pistons shall work $\frac{1}{4}$ in. past it at each end, a recess to be formed above and below the bore $\frac{1}{8}$ in. deep to allow for the cylinders being bored out. A separate valve face to be fitted to high-pressure cylinder, fastened with brass pins. The bottom piston-rod stuffing-boxes to be 10 in. deep, and fitted with brass neck rings, $3\frac{1}{2}$ in. deep; glands to be bushed with brass, and fitted with an arrangement whereby all the nuts can be tightened up at once. The escape valves to be fitted with polished cast-iron covers, with brass regulating screws, fitted with polished cast-iron hand wheels. A man-hole, 15 in. diameter, to be fitted in bottom of low-pressure cylinder, and a hand-hole, 8 in. diameter, in bottom of high-pressure cylinder for cleaning purposes.

2. *Cylinder Covers.*—To be of strong cast-iron, $1\frac{1}{8}$ in. thick, fitted with strong T feathers on top, covered with wrought-iron chequered plates. Flanges to be polished, and secured to cylinders with studs and polished steel nuts. Stuffing-boxes to be fitted, 7 in. deep, with saucers for catching the waste oil from the tail rods.

3. *Slide Valves.*—To be placed on the forward side of their respective cylinders. The low-pressure cylinder valve to be double ported, the high pressure cylinder valve to be single ported, and both to be made of hard close grained cast-iron. These valves to be carefully fitted to valve face by scraping, and rendered perfectly steam tight.

4. *Expansion Valve.*—To be fitted to the back of the high-pressure cylinder slide valve, and arranged to cut off at from 12 in. to 36 in. of the stroke of piston, and so made, that the different grades of expansion can be adjusted from the starting platform while the engines are at work.

5. *Valve Motion.*—To have double bar link motion, each bar of which to be of mild steel, $1\frac{1}{4}$ in. thick and 4 in. broad, with studs for upper ends of eccentric rods, $2\frac{3}{8}$ in. diameter, $2\frac{1}{2}$ in. long. The centre part to have a boss, 3 in. diameter and $2\frac{3}{8}$ in. deep, for receiving drag link pins, all forged on solid. Eccentric rods, $2\frac{1}{4}$ in. diameter at smallest part, tapering to $3\frac{1}{4}$ in. diameter at lower end, to have double jaws at upper ends with hard brasses and wrought-iron covers, and secured with steel bolts and double nuts. Lower ends to be T-shaped and secured to eccentric straps with steel studs and double nuts. Valve spindles to be of forged mild steel, $3\frac{1}{4}$ in. diameter, with large eye at lower end, lined with hard brass for valve link block (which is to be of cast steel with hard brass adjusting slips above and below link). To have adjustable guides attached to under sides of valve casings, with rectangular hard brasses secured with wrought-iron covers and studs. Upper end of high-pressure cylinder valve rod to have brass dome guide. Upper end of low-pressure cylinder valve rod to have a balance piston and cylinder, 12 in. diameter, on top of valve casing cover. Eccentric pulleys to be $3\frac{3}{4}$ in. broad, of cast-iron, keyed on crank shaft couplings, by single key with head, and steel pinching screws, and to have straps fitted to them made of gun-metal with cast-iron parting pieces, and secured with steel bolts and double nuts. Drag links to be of wrought-iron (double), and made adjustable at all the working parts with hard brass bearings.

Digitized by Google

6. *Pistons.*—To be of cast-iron, 1¼ in. thick, turned to size of cylinders, and made hollow with strong feathers uniting top and bottom metal, fitted with approved patent packing rings and springs. The pistons to be turned tapered for inner edge of junk ring so that it can be easily removed. The junk ring to be secured with square-headed screw pins, screwed into brass nuts recessed into body of piston; the heads of the screw pins to be secured with solid guard rings. No core holes to be made in top or bottom metal of pistons.

7. *Piston-Rods.*—To be forged of mild steel, well fitted to the pistons, and secured to same by a nut (not recessed into piston). Rods to be 6½ in. diameter below pistons, and 4½ in. diameter above pistons. The lower ends (or crossheads) to be forged solid, slotted, and fitted with strong hard brasses (flat top and bottom) secured with malleable-iron covers and two steel bolts, 3¾ in. diameter, with guard rings on the nuts. Steel pinching pins, also split pins, to be put through the points of these bolts.

8. *Connecting-Rods.*—To be forged of best selected scrap iron, with solid double jaw at upper end. Smallest diameter of rods to be 6½ in., tapering to 8 in. at lower end, length between centres 9 ft. Hard brasses to be secured to lower ends, with two well-fitted steel bolts, 3¾ in. diameter, having guard rings with steel pinching pins, and split pins through points of bolts. The lower end brasses to have four strips, ½ in. thick, of approved white metal, each 2 in. broad, fitted in each half of brass with ¼ in. of brass between them, and finished $\frac{1}{16}$ in. above surface of brasses. Parting pieces of cast-iron, 3 in. thick, to be fitted between brasses, so that they can be removed without taking out the bolts for the purpose of stripping and taking up the wear.

9. *Starting and Reversing Gear.*—Reversing gear to be arranged so that it may be worked either by hand or steam, and placed in a convenient position. All handles, viz., cylinder drain cocks, impulse valve, and throttle valve handles to work in one brass quadrant bracket, with engraved index for each, and placed as near as possible to reversing wheel. An impulse piston valve to be fitted to low pressure cylinder, supplied with steam from pipe leading to donkeys, and fitted with a stop valve worked from starting platform. A stop valve to be fitted in main steam pipe on high-pressure casing, also worked from starting platform, this stop-valve casing to contain separate throttle and governor valves.

10. *Shafting.*—Crank shaft to be built of best forged mild steel, made in two pieces, interchangeable and reversible, bolted together with bolts 2¼ in. diameter. Crank webs to be 10 in. thick, and carefully shrunk on shafts and crank pins, and keyed upon shafts with steel keys 1⅞ in. deep, 2¼ in. broad. Crank pin bearings to be 14 in. long, and 13 in. diameter; and crank shaft bearings 18 in. long, and 13 in. diameter. The whole of the bearing parts to be turned perfectly true, after being fitted together, and the finished shaft to be carefully fitted into its bearings.

Propeller shaft to be of best forged mild steel 12¼ in. diameter, and covered with brass liners ⅝ in. thick, for stern post and stuffing-box bearings.

Intermediate shafts to be forged of best selected scrap iron 12¼ in. diameter, turned all over, made with solid couplings, and secured with well-fitted bolts and double nuts. Thrust shaft to be made of best selected scrap iron 12½ in. diameter, and not more than 12 feet long, with 4 solid collars 18⅝ in. diameter outside, and 2½ in. thick. Bearings, lined with approved white metal, to be supplied for shafting in tunnel where required, each fitted with a water cock and tallow box on top, and saucers below the fore and after sides of each bearing. Wrought-iron stools to be made for

Digitized by Google

the support of each bearing properly secured to ship's floors. A strong handrail and platform to be fitted all along the tunnel.

11. *Thrust Bearing Block.*—To be a strong casting of iron, fitted with 4 cast steel horse-shoe pieces, faced with approved white metal, and finished $\frac{1}{16}$ in. above the surface of cast steel. Each horse-shoe piece to be independently adjustable in a fore-and-aft direction on two mild steel rods $1\frac{7}{8}$ in. diameter, with brass adjusting nuts. The sole of block to have $4\frac{1}{2}$ feet of bearing fore and aft and 3 feet athwart ships, securely fastened with turned and fitted bolts, and nuts, to a very strong wrought-iron stool, worked on to ship's floors and keelson; the rivet holes of which, are to be all rimered perfectly fair before riveting. A large box to be formed at bottom of bearing, with a drain cock and pipe led through water-tight bulkhead. A large oil box and water cock to be fitted to each collar.

12. *Main Columns.*—The two columns on port side of engines to be cast in one piece with condenser, and to take the thrust of connecting-rods when the engines are going ahead. Separate guide plates to be bolted to these columns, with a recess between them and the columns for cold water, with inlet from circulating pump discharge, and outlet to bilges with regulating cock where required. Columns on starboard side to be of cast-iron, round section $1\frac{1}{4}$ in. thick, and of ample strength with astern guide faces cast on. Round flanges, at upper and lower ends, to be firmly secured to cylinders, and to sole-plate, with turned and fitted bolts and nuts.

13. *Sole-Plate.*—To be made of sound cast-iron of strong hollow box section $1\frac{1}{4}$ in. thick, and fitted to receive main bearing brasses. These brasses to be four in number and rectangular, bearing all over top, bottom, and sides (no fitting strips), made extra heavy of best bush brass. The bottom flanges of brasses to be cut away, so that the whole length of the brass may bear on sole-plate recess. Covers to be of wrought-iron, polished. Each bearing to have two iron bolts $3\frac{1}{4}$ in. square in lower part, $3\frac{1}{4}$ in. round in upper part, secured into sole-plate by mild steel cotters bearing all the way through sole-plate and bolt, and having finished nuts above covers, with guard rings and steel pinching pins. Sole-plate to be fixed down securely by 22 bolts 1 in. diameter, and 6 turned and fitted bolts $1\frac{1}{4}$ in. diameter, to a strong wrought-iron platform properly fitted and riveted to ship's floors. A space of $1\frac{1}{8}$ in. to be left between the sole-plate and platform, packed up with at least 12 cast-iron slips, and between the slips with hard-wood wedges.

14. *Condenser.*—To be of the horizontal surface-condensing type, placed in a fore and aft position on port side of sole-plate. The metal to be $1\frac{1}{4}$ in. thick, with strong ribs under columns, and the condenser to be well secured to sole-plate and cylinders, with turned and fitted bolts and nuts. Tube plates to be $1\frac{1}{4}$ in. thick, of cast-brass, and secured by brass bolts to condenser flanges. Tubes to be solid drawn brass $\frac{3}{4}$ in. external diameter, 18 B.W.G., except the two top rows, which are to be 16 B.W.G. All tubes to be tinned inside and outside, and to have a total condensing surface of 2,800 square feet. The ends of the tubes to be packed with best red rubber rings, and so fitted as to provide for expansion and contraction. Brass stay plates $\frac{5}{8}$ in. thick to be fitted inside condenser where required, and secured by brass studs and nuts. Condenser to be fitted with spray pipes, so as to be able to work as a jet condenser if necessary. Doors to be fitted in top and bottom of condenser where required, for examining or cleansing it. Condenser end doors to be made in two pieces, each having snugs for lifting shackles, and sight doors 10 in. diameter opposite ends of tubes. A brass supplementary feed cock 1 in. diameter to be fitted to the condenser to admit circulating water.

Digitized by Google

15. *Air Pump.*—To be 21 in. diameter and 28 in. stroke, worked by forged wrought-iron levers from the crosshead of after engine. The chamber to be $\frac{5}{8}$ in. thick, it, as well as the bucket, valves, seats, and pump-rod covering, to be all of cast-brass. The foot valve to be placed clear of bottom of pumps for easy examination. Patent metallic valves, of approved make, to be fitted throughout, and a drain cock 2 in. diameter to be fitted to bottom of pump. A small air valve to be fitted to pump under discharge valve.

16. *Circulating Pump.*—The engines to be fitted with one double-acting circulating pump, 11 in. diameter and 28 in. stroke, placed alongside of air pump, with cast-brass chamber and solid brass bucket. Valve seats, guards, and pump-rod liner to be of cast-brass, and valves of best red rubber. Pump to have a $5\frac{1}{2}$ in. suction non-return valve, with pipe from engine-room bilge fitted with a lead rose box. All the bolts and nuts in and about these pumps and condenser which are exposed to sea water to be of brass. A small air valve to be fitted to each end of pump.

17. *Feed and Bilge Pumps.*—To have two feed and two bilge pumps. All plungers to be $3\frac{3}{4}$ in. diameter and 28 in. stroke, and worked from air pump crosshead. To have cast-brass plungers, valves, valve seats, and valve chests. Each pump to be made to work independently of the others. The feed pumps to have a strong cast-iron chest containing independently worked inlet suction valves, escape valves, and discharge valves to boilers. A large air vessel to be fixed on, or near this valve box in connection with discharge pipe to boilers. The bilge pumps to draw through a large mud box from a valve box placed above the engine-room platform, and to be so arranged as to pump at will, from the well at after end of tunnel, from after hold, from three places in engine-room, and from the forehold. Each valve to be marked with the part of the vessel to which its pipe leads, and each pump to be fitted with a small test cock.

18. *Sanitary Pump.*—To be fitted on back of condenser, and worked from a stud on side of air-pump lever. The plunger to be of brass, 3 in. diameter and 12 in. stroke. To have a suction pipe from sea, and discharge pipe leading to distributing tank above the bridge deck. A branch pipe between this discharge and donkey pump discharge to deck, to be fitted so that water can be pumped into this tank by donkey pump, when the vessel is in port.

19. *Donkey Pump.*—A double-acting steam donkey pump to be fitted with 8 in. cylinder, 10 in. stroke, and having connecting-rod, crank shaft, and fly-wheel. To be arranged with all the necessary valve chests, to enable it to draw from sea, and from bilge of all compartments, or from the hot well, and to discharge into main and donkey boilers, or through condenser, or overboard, or on deck. The pump-rod liner, valves, valve seats, stops for valves, glands, and neck rings to be all of cast-brass.

20. *Hand Pump.*—A hand pump to be fitted near the donkey pump in engine-room, capable of drawing and discharging in the same ways as the donkey pump, and to be worked with hand lever from the gratings round cylinders at the level of main deck.

21. *Stern Tube.*—To be of very strong cast-iron $1\frac{3}{4}$ in. thick, firmly secured into sternpost and fastened with a strong wrought-iron nut outside. To have a brass bush at outer end 3 ft. 9 in. long, lined with staves of lignum-vitæ, and fastened into the tube with an outer flange and 6 brass screw pins $1\frac{1}{4}$ in. diameter. Inner end of tube to have a stuffing-box 12 in. deep, with brass neck ring 10 in. deep. The gland to be bushed with brass, and to be secured with 6 brass studs $1\frac{1}{4}$ in. diameter, having brass nuts. Two of these studs to be long enough to [illegible] of stuffing-box being packed

Digitized by Google

without taking off the nuts. A water cock to be fixed near gland in the same way as the tunnel bearings.

22. *Propeller.*—Propeller boss to be of very strong cast-iron, and fitted with four removable blades of mild cast-steel, each of which is to be fastened to the boss with flanges 29 in. diameter, 2⅜ in. thick, by 9 mild steel studs 2¼ in. diameter. The studs to be fitted with brass nuts, capped, and each provided with a brass pinching pin, to prevent slacking back. The after end of shaft to be tapered ¾ in. to 1 foot, and boss secured to it with a key the whole length of boss (2¼ in. broad by 1¼ in. thick), and a strong wrought-iron nut with a steel cotter pin put through point of shaft to prevent the nut slacking back.

23. *Valve Chests and Cocks.*—All valve chests of cast-iron to have cast brass valves, valve seats, spindles, and glands. All valve chests of 3 inches diameter and smaller to be entirely of brass. All cocks exposed to boiler pressure to have jointed covers and packing glands. Blow-off cock on ship's bottom, to have spigot and brass flange outside, secured through ship's plating with brass bolts and nuts, and to have four feathers from bottom flange to sides of cock. The sea suction valve chest for circulating pump to be a very strong casting of tough iron, enlarged where riveted to ship's plating to at least three times the area through valve, and fitted with a cast-brass rose plate secured with brass studs and nuts.

24. *Pipes.*—All pipes, except bilge suction pipes, in connection with the engines and boilers to be of copper. Main steam pipe to be No. 3 B.W.G.; main feed and blow-off, No. 6; discharge pipes from air and circulating pumps, No. 7; and waste steam pipe, No. 11 B.W.G. All sheets for outside bends to be one number of the W.G. thicker than specified. All copper pipes above ¾ inch bore to be secured together with flanged joints. Pipes to be all tested with water pressure to double their working pressure before being fitted on board, and secured where necessary with wrought-iron straps lined with sheet lead. Bilge suction pipes to be of lead, 3 inches inside diameter, and fitted together with flanged joints and wrought-iron washer rings, in lengths of not more than 12 feet. These pipes to be supported by hard-wood rests secured firmly to ship's floors.

25. *Packing Glands.*—All glands about the engines and boilers which are not of brass to be bushed with brass, and to have brass neck rings. The piston-rod and valve spindle glands to have saucers cast on them for catching oil.

26. *Governor.*—An approved patent governor to be fitted in a convenient position in engine-room, and connected to a separate throttle valve in main steam pipe.

27. *Turning Gear.*—To have small steam engine, say cylinder 5 inches diameter, and 6 inches stroke, with a fly-wheel on its crank shaft, in a suitable position for working by hand. The turning arrangement to consist of two sets of worm gearing, both worms wrought-iron or steel, the large one to be capable of being easily and securely put out and into gear, and to be fitted with a square on head of spindle, with strong ratchet lever for working by hand.

28. *Indicator Gear.*—Indicator cocks and pipes ¾ inch diameter (inside), to be fitted to both cylinders with all necessary gear for conveniently taking diagrams.

29. *Gauges.*—One steam gauge for each of the main boilers to be fitted in stoke-hole, one steam gauge for donkey boiler, and one steam, one vacuum, and one compound gauge to be fitted in engine-room. All gauges made by approved makers, and all 7 inches diameter, except the one for donkey boiler, which is to be 4 inches diameter. Gauge pipes to be all of drawn copper, jointed with ground screw-couplings.

Digitized by Google

30. *Telegraph.*—To be fitted from both upper and lower bridges to engine-room on the reply principle. The communication between the dials to be effected by means of wires and copper chains, with brass guide pulleys at all angles. Both bridge-stands to be of brass, and the dials fitted with lamps in the usual way.

31. *Clock and Counter.*—A neat engine-room clock and revolution counter combined, to be fitted in a convenient position.

32. *Steam Whistle.*—A steam whistle 3 inches diameter on the organ principle, to be fitted on front of funnel at approved height from bridge deck. The whistle steam pipe to be connected to both main boilers, and also to donkey boiler.

33. *Oil Lubricators.*—An approved patent lubricator to be fitted to high-pressure casing or main steam pipe. All oil boxes on engines to be made of cast-brass, with hinged covers also of cast-brass where required. Piston-rods, connecting-rods, and piston-rod and valve-spindle guides to be supplied with oil from central boxes fixed to sides of cylinders, or where found most convenient, with separate compartments for each syphon. These boxes to be all finished bright. The crank pins to have each two oil pipes $\frac{3}{4}$ in. diameter, one on each side of connecting-rods.

34. *Water Cooling Pipes and Cocks.*—One brass water cock to be fitted in a convenient position near each of the main bearings, and two brass water cocks to be fitted for each crank pin, all with $\frac{1}{2}$ in. diameter brass telescope pipes. The water to be supplied direct from the sea, and a branch pipe to be led all along tunnel with a brass cock at each bearing for intermediate shafting. The thrust shaft collars to have each a brass cock and pipe. A brass cock 2 in. diameter, to be fitted to discharge from circulating pump to condenser, suitable for connecting to an india-rubber hose of same diameter, and of sufficient length for the conductor to reach any of the bearings in engine-room.

35. *Steam Pipe Covering.*—All steam pipes in engine-room and holds to be thickly covered with hair, felt, or other approved non-conducting material, and neatly covered with canvas.

36. *Painting.*—The whole of the engines (with the exception of bright work and copper pipes which are not covered), to be painted with three coats of best oil paint in any colour that may be required, and to be finished with two coats of bright varnish.

37. *Overhauling Gear.*—Strong beam and two sets of screw gear to be fitted for lifting cylinder and casing covers, also shackles, eye bolts, &c., to be fitted where required, for convenience in overhauling main bearings, condenser doors, pump covers, &c.

38. *Store-Room.*—To be fitted up where required with waste locker, drawers, shelves, &c., with sufficient accommodation for spare gear and engine and boiler working tools and stores.

39. *General Finishing.*—Gratings, ladders, handrails, &c., to be fitted where required for the convenient working, overhauling, and cleaning of the engines and boilers. Engine-room and stoke-hold to be well lighted with strong copper or brass lamps, fitted with plate glass and fixed where most convenient. The engine room and stoke-hold floors to be of cast-iron foothold plates, fitted upon wood or iron sleepers as may be required, the wing plates in stoke-hold to be bolted down.

Digitized by Google

URE XXIII.—QUESTIONS.

y an index of parts a front and a side elevation
, crosshead, connecting-rod, and crank shaft
der of a compound inverted-cylinder marine
cification in your own words for these various
t in your sketch by the index letters.
the expansion and ordinary slide valve, with
high-pressure cylinder of a compound inverted-
Also include the valve spindles, link motion,
rics, and write out a complete specification of
g to them by the letters on your drawing and

sure cylinder double-ported slide valve, with
, balanced piston, link motion, eccentric-rod, and
tted to a compound inverted-cylinder marine

ler engine, sketch a sectional side elevation only,
cylinders, and describe some mode of construc-
orking may be carried out in the high-pressure

t elevation only, and describe by an index of
der covers, slide valves, valve spindles, valve
ods, with glands complete, of a modern compound
ngine. Write out in your own words a specifica-
shown in your sketches, referring to each part by

, by index of parts, the general arrangement of an
inverted-cy... ind marine engine, showing by a front and side section and plan the steam cylinder, the air pump, and the condenser, &c. What advantages and disadvantages has this form over the simple condensing engine of the same type?

7. You are required to describe the complete general arrangement by a sketch and index of parts of some form of compound-cylinder marine engine of the condensing type, with boilers and principal pipe connections. Show clearly the manner in which steam is conveyed from the boilers to the engines, and distributed between the cylinders, and how it finally passes into the condenser, also how the condensed water is returned to the boilers.

8. Explain the principle of the compound or double-cylinder engine. State all the advantages and disadvantages of the compound engine as compared with the simple condensing engine, and clearly point out the action of the steam in each case.

9. Sketch any arrangement with index of parts, and describe thoroughly how it is worked for starting, stopping, and reversing a marine engine by steam starting gear.

10. Sketch a section through the cylinders and valve of a compound engine where *one valve placed between the cylinders* is used for the distribution of the steam. Explain the action of the valve by any sketches which may be necessary. (*Adv. S. and A. Exam.*, 1889.) This is an obsolete arrangement consisting of two long D or Murdock's slide valves placed back to back, and moulded into a single hollow but closed pipe, with ports at each end. See Prof. Goodeve's *Text-Book on the Steam Engine*, p. 236.

Digitized by Google

LECTURE XXIV.

TRIPLE- AND QUADRUPLE-EXPANSION ENGINES.

CONTENTS.—Theory of Triple-Expansion Engines*—Triple-Expansion Engines of the S.S. *Arabian*—Rankin & Blackmore's Quadruple-Expansion Disconnective Engines—Brock's Patent Quadruple-Expansion Engines for the S.S. *Buenos Aires*.

Theory of Triple-Expansion Engines.—Economy of coal is one of the chief things to be kept in view by engineers in designing most kinds of steam engines, but more especially in the engines for steamers intended for long voyages. Not only does every ton of coal saved mean a ton of freight earned, but it also means a saving of expense in firing, and in many trades of time in stopping to coal at outlying ports, where the fuel is expensive.

Within the last twenty years the chief direction in which economy has been sought, has been by a gradual increase of the steam pressure. Unfortunately, however, as we increase the pressure, we do not gain proportionately in efficiency (as will be seen from the following table), and a time must come when it will not pay to increase the pressure further, from the difficulty of keeping the cylinders lubricated at high temperatures, as well as from the untrustworthiness of steel for the furnaces at a blue heat (about 470° F.), and the necessarily increased thickness of the boiler plates, &c.

As we pointed out in Lecture XII., the utmost efficiency possible with a steam engine (supposing no practical difficulties intervened to prevent its realisation) is represented, *by the difference between the absolute temperatures of the boiler steam and that of the condenser, divided by the absolute temperature of the former.*

Or by the formula—

$$\frac{\tau_2 - \tau_1}{\tau_2},$$ (see page 90).

Where τ_2 = the absolute temperature of the boiler steam,
and τ_1 = „ „ „ of the condenser.

* The student, before commencing this Lecture, should again review what we said in Lecture XII. and the latter parts of Lectures XIV. and XV.

Digitized by Google

Now, assuming the temperature of the condenser to be 100° Fah., the efficiency as we increase the pressure from steam of atmospheric pressure to that of 300 lbs. on the square inch, is given in the following table:—*

For	0 lbs.	or Atmospheric pressure		the efficiency	= 16·6 per cent.
,,	10 ,,	boiler pressure by gauge		,,	= 20·0 ,,
,,	20 ,,	,,	,,	,,	= 22·1 ,,
,,	30 ,,	,,	,,	,,	= 23·7 ,,
,,	40 ,,	,,	,,	,,	= 25·0
,,	50 ,,	,,	,,	,,	= 26·1 ,,
,,	60 ,,	,,	,,	,,	= 27·0 ,,
,,	80 ,,	,,	,,	,,	= 28·6 ,,
,,	100 ,,	,,	,,	,,	= 29·8 ,,
,,	125 ,,	,,	,,	,,	= 31·1 ,,
,,	150 ,,	,,	,,	,,	= 32·2 ,,
,,	200 ,,	,,	,,	,,	= 33·9 ,,
,,	250 ,,	,,	,,	,,	= 35·3 ,,
,,	300 ,,	,,	,,	,,	= 36·5 ,,

From the above table it will at once be seen that Watt, in working with low pressure steam, had at his disposal the most prolific portion of the efficiency curve, and as we gradually raise the pressure, the rate of increase of efficiency becomes less and less, until about 300 lbs. the curve becomes very flat.

The actual efficiencies of steam engines must, in practice, for many reasons, be always much less than the above values; the chief reason being the condensation of steam in the cylinder or cylinders. Nevertheless, the ratio of the above figures, or the curve plotted from them, will be proportional to, or represent to scale, the relative efficiencies of engines working at different pressures, if we assume that the sum of all the losses which contribute to the reduction of the actual below the theoretical efficiency, is proportional to the work done in the engine cylinder or cylinders. In advancing from 60 lbs. (the usual pressure adopted on the introduction of the compound engine and for several years afterwards) to 150 lbs. (the pressure now being used in most triple-expansion engines), we see that the efficiency rises from 27·0 to 32·2 = 5·2. Or, as $27 : 5{\cdot}2 :: 100 : x = 19{\cdot}25$ per cent. increase of efficiency. But from the actual trials of a mail steamer, the engines of which were altered from compound to

* The student should verify the accuracy of the above table for himself by calculation, referring for the temperatures corresponding to the various steam pressures (absolute) to table, p. 62, and for the percentage efficiencies to the data given at p. 90; he should then plot out an efficiency curve, using the boiler pressures for abscissæ and the corresponding efficiencies for ordinates.

Digitized by Google

triple-expansion, the decrease in the consumption of coal was 33* per cent., while the speed remained the same.†

Several other instances of increased economy due to the adoption of higher pressures and triple-expansion engines, are given by Mr. Parker, Chief Engineer Surveyor of Lloyd's Register, whose position gives him exceptional opportunities for observing the improvements being effected throughout the world in marine engines. One other of these instances we shall quote here. "Two large passenger steamers of over 4500 gross tonnage, having engines of about 6000 I.H.P., built of the same dimensions, from the same lines, with similar propellers, are exactly alike in every respect except so far as their machinery is concerned. One vessel is fitted with triple-expansion engines, working at a pressure of 145 lbs. per square inch, whilst the other vessel is fitted with ordinary compound engines, working at a pressure of 90 lbs. per square inch. Both vessels are engaged in the same trade, and steam at the same rate of speed, viz., 12 knots per hour. The latter vessel on a round voyage of 84 days burns 1200 tons more coal than the former."

The fact that a greater increase in economy is actually realised with triple-expansion engines than what we might have been led to expect, from merely taking the performances of compound engines and the proportionate increase of pressure into account, shows, that the triple-expansion engine works under conditions more nearly approaching to those required for the maximum efficiency. This may be partly accounted for from the circumstance, that the range of temperature through which the steam passes in any one cylinder in the course of one revolution is less, and consequently the wasteful condensation of steam is reduced.

For example.—(1.) Take steam of 60 lbs. boiler pressure, doing work in a compound engine.

Then 60 lbs. = 75 lbs. absolute = 307° Fah. (See Table, p. 60).

Let this fall in temperature through two cylinders to the condenser at 100° Fah.

$\therefore \frac{307° - 100°}{2 \text{ cyls.}} = 103°{\cdot}5$ for the fall in temperature in each cylinder, supposing the fall to be equal in each.

* The compound engine was poor, and 25 per cent. sufficient.

† See paper "On the Progress and Development of Marine Engineering," by W. Parker, Esq.—read before the Institute of Naval Architects, July 29, 1886, and reported in *The Engineer and Engineering*, Aug. 6, 1886.

Digitized by Google

(2.) Take steam of 90 lbs. boiler pressure, doing work in a compound engine.

Then 90 lbs. = 105 lbs. absolute = 331°·3 Fah.

$$\therefore \frac{331°\cdot3 - 100°}{2 \text{ cyls.}} = 115°\cdot6 \text{ for the mean fall in each cylinder.}$$

(3.) Take steam of 150 lbs. boiler pressure, doing work in a triple-expansion engine.

Then 150 lbs. = 165 lbs. absolute = 366° Fah.

$$\therefore \frac{366° - 100°}{3 \text{ cyls.}} = 88°\cdot6 \text{ for the mean fall in each cylinder.}$$

(4.) Take steam of 200 lbs. boiler pressure, doing work in a quadruple-expansion engine.

Then 200 lbs. = 215 lbs. absolute = 388° Fah.

$$\therefore \frac{388° - 100°}{4 \text{ cyls.}} = 72° \text{ for the mean fall in each cylinder.}$$

(5.) 200 lbs., with five expanding cylinders, gives a mean fall of 57°·6 Fah. for each cylinder.

The leakage of heat energy to the condenser is also less, for the same power developed by the engines on the triple and quadruple expansion principle. No doubt a great deal of the greater economy that may be obtained from triple- and quadruple-expansion engines depends upon properly proportioning the areas of the several cylinders and receivers, so as to take as full advantage of the expansion of the steam as possible. In order to illustrate this point, Mr. Parker of Lloyd's, in the paper already referred to, instances two sets of engines made by two well-known firms. "In engine No. 1, the cylinders are proportioned as 1 : 2·5 : 7·11; the boiler pressure is 150 lbs. per square inch, and the mean pressure of the three cylinders reduced to the low-pressure cylinder, is 25·61 lbs. In engine No. 2, the cylinders are proportioned as 1 : 2·5 : 5·28; the boiler pressure is 135 lbs. per square inch, and the mean pressure reduced to the low-pressure cylinder, is 32·1 lbs. per square inch. It will be seen at once that engine No. 2 is not using the steam so expansively as engine No. 1, and in proportion to the size of low-pressure cylinders, it is doing $\frac{32\cdot1}{25\cdot61}$, or 1·253 times as much work as No. 1. On measuring the amount of steam used per

Digitized by Google

revolution from the indicator diagrams, it was found, however, that engine No. 2 used 1·494 times as much weight of steam as engine No. 1; and as it only did 1·253 times as much work, the efficiency of No. 1 must be $\frac{1{\cdot}494}{1{\cdot}253}$, or 1·19 times greater than that of No. 2; in other words, No. 1 engine would give 19 per cent. more power than No. 2, from the same weight of steam used.

Engineers and the owners of steamships generally are fast recognising the advantages of the triple-expansion engine over the ordinary compound form; so much so is this the case, that 41 sets of triple-expansion engines have been built during the first half-year of 1886, as compared to 60 pairs of compound engines, and there are in hand at present (Aug. 1886) no less than 128 sets of triple-expansion engines, as compared to 71 pairs of compound, independent of 23 sets being built for the British Royal Navy, which are expected to equal 130,000 combined I.H.P. The chief stimulus to this rapid change was given by Mr. A. C. Kirk of Messrs. Robert Napier & Sons, who in 1881 designed and built the engines and boilers of the S.S. *Aberdeen* (referred to at p. 132); for, previous to that, no one had had the courage to use steam of 125 lbs. at sea for large vessels in a boiler of the ordinary marine type.

Seeing that we are so close to what appears to be the limit of pressure that can be economically and safely used in large marine engines, engineers will soon have to turn their attention in other directions than that of still further increasing the steam pressure, in order to save the coal bill; such as better methods of combustion, and of transferring heat from the furnace or fuel to the water,* and to reducing the amount of power absorbed by the machinery itself. At least 50 per cent. of the power developed in the cylinders of the very best marine engines of the present day, is absorbed or lost in overcoming frictional and other resistances, thus leaving only about half the power generated in them for the main and useful purpose of propelling the ship.

Triple-Expansion Engines, S.S. "Arabian."—The following perspective view, and the accompanying folding-page, illustrates† a successful form of small power triple-expansion twin-screw

* See *Industries*, Aug. 27, 1886, p. 197, and *The Engineer*, Sept. 10, 1886, on Marine Boilers.

† We are indebted to Messrs. Rankin & Blackmore for the illustrations, which are from what appeared as a large two-page engraving, and full-page [illegible] in *Engineering*, on July 25, 1884.

[illegible] Students should refer to the Sixth Edition of Seaton's *Manual* [illegible] *Engineering* for views of the different ways by which Triple and [illegible] Expansion have been carried out in practice.

Digitized by Google

engines, manufactured by Messrs. Rankin & Blackmore of Greenock for the S.S. *Arabian*. This steamer, which is employed on the West Coast of Scotland Trade, carries about 240 tons of cargo on a light draught, and is 126 feet long, 22 feet beam, and 9 feet 6 inches depth of hold. On her trial trip, April 26, 1884, she attained a speed of 10 knots, on a mean draught of 5 feet 7½ inches.

The engines are constructed on what is known as the maker's Improved Patent Triple-Expansion Disconnecting Type (of which they have several modifications both for screw and paddle steamers), suited to an initial pressure of 150 lbs. on the square inch.

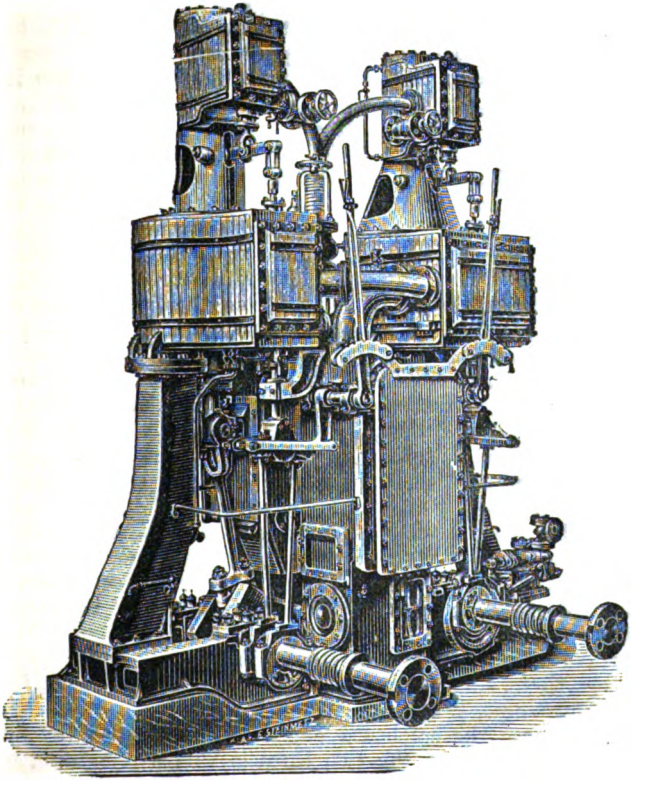

TRIPLE-EXPANSION TWIN-SCREW ENGINES.
BY MESSRS. RANKIN & BLACKMORE.

Digitized by Google

Arrangement of Cylinders.—Referring to our illustrations and to the "Index to parts" on the folding page (which should be carefully compared by the student before reading the following description), it will be seen that each screw-shaft has but one crank-shaft, C S, above which are mounted two cylinders tandem fashion. Above the port shaft, are a high-pressure cylinder, C_1, 9 inches in diameter, and an intermediate cylinder, C_2, 18 inches in diameter, while above the starboard shaft are another high-pressure cylinder, C_1, also 9 inches in diameter, and a low-pressure cylinder, C_3, 32 inches in diameter. The stroke in all cases is 22 inches. The intermediate cylinder is surrounded by a receiver, which is divided into two parts, of which the lower is connected to the exhaust pipes, E P_1 and E P C_1, from the two high-pressure cylinders, C_1, C_1, by the steam pipe, S P C_2, to the intermediate cylinder, C_2. The upper part of this receiver is in communication with the exhaust pipe, E P C_2, from the intermediate cylinder, and is also connected by a pipe, S P C_3, with the valve chest of the low-pressure cylinder, C_3. This pipe is fitted with a spring-loaded relief-valve, R V, opening to a pipe which can discharge into the atmosphere any steam passing the relief-valve. There is also a smaller spring-loaded relief-valve R V^1, the casing of which has two branches, the one communicating with the upper, and the other with the lower portion of the receiver, surrounding the intermediate cylinder. This arrangement permits steam to pass from the lower to the upper part of the receiver, as soon as the pressure in the lower part exceeds a certain amount.

Course of Steam Under Different Conditions of Working.—(1.) With both engines at work, steam is admitted from the boiler by the steam pipes, S P C_1, S P C_1, and stop-valves, S V, S V, to the valve chests of both high-pressure cylinders, C_1, C_1, while the exhaust steam from them passes down through the exhaust pipes, E P_1, and E P C_1, and steam pipe, S P C_2, to the lower part of the receiver which surrounds the intermediate cylinder, C_2, and passes from thence to the valve chest of that cylinder. After having done its work in the intermediate cylinder, it is exhausted into the upper part of the surrounding receiver, and is then led through the horizontal pipe, E P C_2,—S P C_3, to the valve chest of the low-pressure cylinder, C_3, and after doing its work there, it is finally exhausted into the condenser, Co, by the exhaust pipe, E P C_3, in the usual way.

(2.) Suppose the starboard engine to be stopped (by means of the reversing gear, the two throttle valves remaining open) and the port engine to be worked alone. Under these circumstances the steam from the port high-pressure cylinder will

Digitized by Google

THE NEW YORK
PUBLIC LIBRARY

ASTOR, LENOX
TILDEN FOUNDATIONS

Digitized by Google

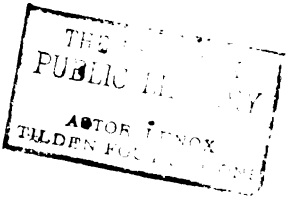

Digitized by Google

exhaust into the lower part of the receiver surrounding the intermediate cylinder, passing thence into the valve chest of that cylinder, doing its work in the intermediate cylinder, and exhausting into the upper part of the receiver. The starboard engine being stopped there is no escape for the steam through the low-pressure cylinder, so it will accumulate in the upper part of the receiver until the pressure is sufficiently high to raise the large spring-loaded valve, the steam then escaping into the atmosphere.

(3.) On the other hand, if the port engine be stopped and the starboard engine be worked alone, the steam from the starboard high-pressure cylinder exhausts into the lower part of the receiver around the intermediate cylinder, and, there being no escape through the intermediate cylinder valve chest, it accumulates there until the pressure is sufficiently high to lift the smaller spring-loaded valve, R V^1, when it escapes into the upper part of the intermediate receiver, and hence through the connecting exhaust pipe to the valve chest of the low-pressure cylinder, where it is utilised, and finally exhausted into the condenser in the ordinary way.

It will thus be seen that when both the engines are running they are of the triple-expansion condensing type, while the port engine, when running alone, is of the compound non-condensing class, and the starboard engine when working alone, of the compound condensing class. These explanations of the courses taken by the steam under different conditions of working may appear rather complicated to follow, but there is not in reality any complication in the matter, and the spring-loaded valves being automatic in their action the arrangement does not involve any extra work in handling the engines.

Details—Piston, Cylinders, &c.—The high-pressure pistons are fitted with Ramsbottom's rings, and the intermediate and low-pressure pistons with Buckley's rings and springs, the latter being adopted to avoid the necessity for frequent overhauling. It will be seen from the illustrations, that the high-pressure cylinders are mounted on standards or distance-pieces which are cast in one with the top covers of the intermediate and low-pressure cylinders respectively. All the cylinders have their lower ends cast solid with them, and there are no loose liners or steam jackets. The intermediate and low-pressure cylinders are each supported on one side by projections from the condenser which stands between them, while on the side next the sides of the vessel each of these cylinders is carried by an independent standard or column as shown. The bed-plates with the crank-shaft bearings are both bolted to the condenser, so that the two engines form one solid structure.

Digitized by Google

Valve Motion.—The link-valve motion, L M, is marked by some special features, it having been designed to keep clear of the condenser, which would have been in the way of ordinary double-plate quadrants when working in full gear ahead. To avoid this difficulty, there is bolted to the end of each valve spindle a double-head which carries the quadrants within it, and which enables them to be made much shorter than would be possible with the ordinary arrangement with a solid spindle head between the quadrants. The double-heads on the valve spindles look somewhat massive, as they have of course to be made large enough to allow of the eccentric-rod heads passing between them; but the arrangement seems to answer thoroughly well. The whole of the working parts of the valve gear are made adjustable.

High-pressure Slide Valves.—As will be seen from the views on the folding-page, each valve of the high-pressure cylinders is driven by its valve spindle from a pin guided in a slot of a rocking lever; one end of each of these levers being a fixed fulcrum, while the other is coupled by a connecting-rod to the corresponding lower valve spindle. The high-pressure valves are thus given a travel equal to half that of the valves of the larger cylinders below.

Pumps.—The air, circulating, feed, and bilge pumps (one of each) are worked from the crank-shaft of the starboard engine by eccentrics, the port engine driving no pumps. The air and circulating pumps are each double acting, and are 10 inches in diameter by 10 inches stroke. They are of the pattern in which a plunger works to and fro through a central partition, as shown by Fig. 1, on the folding-page, from which their arrangement will be readily seen. The pumps with these valve chambers form part of the condenser casting. The only packing used for the plungers is water, which is admitted round the plunger where it works through the partition by the apertures shown. This arrangement is found to give excellent results; the pumps work with exceedingly small friction, and the vacuum obtained is quite as good as with pumps having packed buckets. In fact, Messrs. Rankin & Blackmore state that they have repeatedly obtained from 28 to 29 inches vacuum in engines working with steam admitted for three-fourths of the stroke. The section, Fig. 1, just referred to, is taken through the circulating pump which is fitted with india-rubber valves. The air pump is fitted with Kinghorn's metallic valves for both suction and delivery. The feed and bilge pumps are plunger pumps, and are worked by [illegible] from the rods of the circulating and air pump as shown.

[illegible].—The condenser contains 555 solid-drawn brass

Digitized by Google

tubes, 5 feet long between tube-plates, ⅝ inches in diameter and No. 18 W.G. thick. The condensing surface exposed being 545 square feet. The tubes are packed with cotton cord and screwed brass glands. The condensing water is forced through the tubes, making three runs of the length of the condenser.

General.—The engines above described have, as we have already stated, been designed for a working pressure of 150 lbs. per square inch, and the boiler provided in connection with them is illustrated and described in Lecture XXVIII. The slide valves of the two high-pressure cylinders are set to cut off at three-fourths of the stroke, while those of the intermediate and low-pressure cylinders cut off at five-eighths of the stroke.

The total indicated horse-power was 336, and the consumption of coal was but 1·75 lbs. per horse-power-hour with ordinary Scotch coal.

The student should study the several indicator diagrams, with all the data attached, on the folding-page, and as a useful exercise he should plot out an enlarged combined-indicator-diagram-curve, in order to check the one furnished by the makers, and thus revive his acquaintance with the information given at the end of Lecture XV.

Quadruple-Expansion Engines.—Quadruple-expansion engines have not been much used as yet, but there can be little doubt, that as surely as the compound engine replaced the simple condensing engine ten to fifteen years ago, and the present form of triple-expansion engine (only some five years of age), is fast supplanting the compound engine, so the quadruple-expansion engine will in a very few years be the common type for the propulsion of steam vessels. What we shall come to next remains to be seen, but it seems most unlikely that we can go on much further in the direction of increasing the pressure, the number of cylinders, and the number of expansions, owing to the several causes enumerated at the beginning of this Lecture.

We here illustrate one of the few forms of quadruple-expansion engines that have been put into practice—viz., that by Messrs. Rankin & Blackmore of Greenock. The general arrangement of this engine will be at once understood from the figures and the accompanying index of parts. The object aimed at by this design, besides taking advantage of higher pressures from 180 to 200 lbs. on the square inch, is to so arrange the cylinders and other parts, and especially the connecting pipes and their valves in such manner, that should one cylinder in any way become disa[illegible] or require to be examined or repaired at sea, it and the cyli[illegible] tandem to it, may be disconnected from the other pair of cylin[illegible] by simply uncoupling the connecting-rod of the disabled sid[illegible]

Digitized by Google

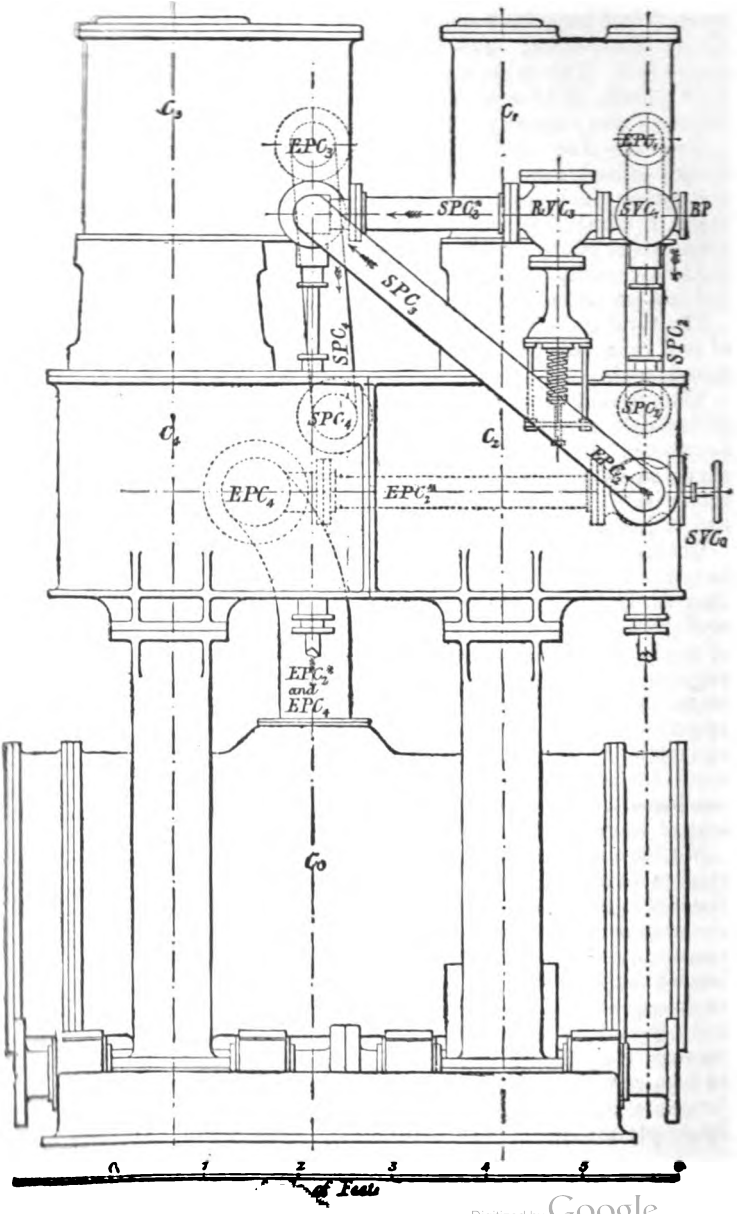

Digitized by Google

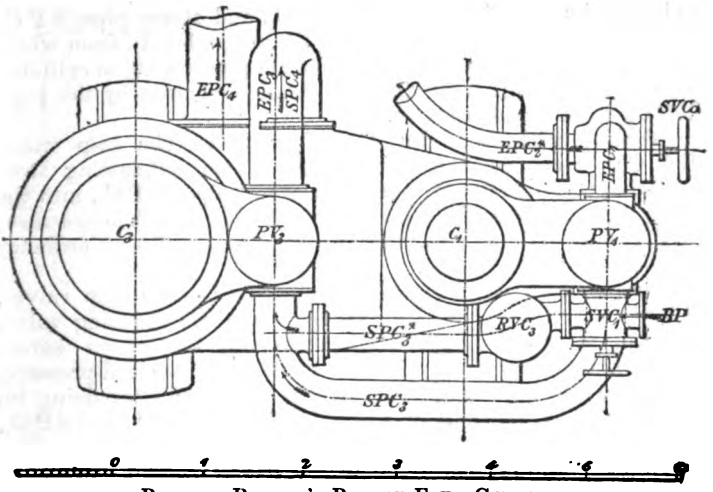

PLAN OF RANKIN'S PATENT FOUR CYLINDER DISCONNECTIVE QUADRUPLE-EXPANSION COMPOUND ENGINE.

INDEX TO PARTS.

C_1,	for Cylinder High-Pres.	S P C_1, S P C_2, S P C_3, and S P C_4,	for Steam Pipes leading to Cylinders, C_1, C_2, C_3, C_4.
C_2,	,, ,, First Intermediate.	E P C_1, E P C_2, E P C_3, E P C_4,	for Exhaust Pipes from Cylinders, C_1, C_2, C_3, C_4.
C_3,	,, Cylinder Second ,,	R V C_3,	for Reducing Valve to Cylinder C_3.
C_4,	,, Cylinder Low-Pres.	Co,	for Condenser.
P V_1, P V_3,	,, Piston Valves.		
B P,	,, Boiler Pipe.		
S V C_1,	,, Stop Valve to C_1.		
S V Co,	,, Stop Valve to Co.		

its crank-shaft end, and the ship kept going by the sound pair of cylinders. The facilities thus provided for working one-half of the engines should the other half become disabled, may be of great practical value at times, for it may be the means of bringing a steamer to port, when otherwise she would be helpless.

As seen from the side elevation and plan, and the index to parts below the plan, there are four cylinders, C_1, C_2, tandem and C_3, C_4, tandem, proportioned and arranged for four stages of expansion.

Ordinary Working.—Under ordinary circumstances, steam enters from the boiler by the boiler pipe, B P, and stop valve, S V Co, to the valve casing of the high-pressure cylinder, C_1. After doing its work in this cylinder, the steam exhausts by the pipe, E P C_1, and steam pipe, S P C_2, to cylinder, C_2, whence it

Digitized by Google

exhausts by the diagonal pipe, E P C_2, and steam pipe, S P C_2, to cylinder, C_3 (the stop valve, S V Co being closed), from which it exhausts by the pipe, E P C_3 and steam pipe, S P C_4, to cylinder, C_4, and after doing work there, it finally exhausts by the pipe, E P C_4, to the condenser, Co.

Working with the After Cylinders Idle.—The stop valve, S V Co, is opened, this permits the steam exhausting from cylinder, C_2, to go direct by the horizontal pipe, E P C_2, into the large exhaust pipe, E P C_4, and from thence into the condenser, so that only cylinders, C_1, and, C_2, are in action like an ordinary tandem compound engine.

Working with the Forward Cylinders Idle.—The stop valves, S V C_1, and, S V Co, are both closed, while the reducing valve, R V C_3, is brought into action, whereby the steam enters cylinder, C_3, direct from the boiler, but at a reduced pressure, owing to the action of the valve, R V C_3, and after doing its work there, it exhausts into cylinder, C_4, by E P C_3, and S P C_4, and from thence into the condenser, Co, by the exhaust pipe, E P C_4, as before, thus leaving cylinders, C_1, C_2, idle, and C_3, C_4, working like an ordinary tandem compound engine.

Last March (1886), Messrs. Rankin & Blackmore constructed the engines and boilers* on the above principle for the Steam Yacht "*Rionnag-na-Mara*," carrying out quadruple expansion by six, instead of four cylinders, or by three pairs of tandem cylinders, the three top cylinders being all high-pressure and 7 inches in diameter, while the two intermediate cylinders were respectively 16 in. and 22 in., and the low-pressure one 34 inches in diameter, all having a stroke of 24 inches. The reasons why six cylinders were adopted instead of four with the arrangement just described, were that the engines might be run very slowly (not more than 15 revolutions per minute), for fishing purposes, and with the view of distributing the power equally over three cranks, so as to make "as sweet working a job as possible." By admitting steam from the boiler simultaneously to the three high-pressure cylinders prompt handling is ensured without the use of starting valves, as the three cranks are set at 120 degrees to each other.

The dimensions of the yacht, which was 311 tons Y.M., were 170 ft. long, 21 ft. beam, and 13 ft. 6 inches depth (moulded), and she attained a speed of 12 knots per hour; the engines developing 528 I.H.P., at 113 revolutions per minute, the steam being expanded to twelve times the original volume to the point of cut-off in the high-pressure cylinders before exhausting into

* These engines and boilers were illustrated and very fully described in *Engineering*, on April 9th, 1886.

Digitized by Google

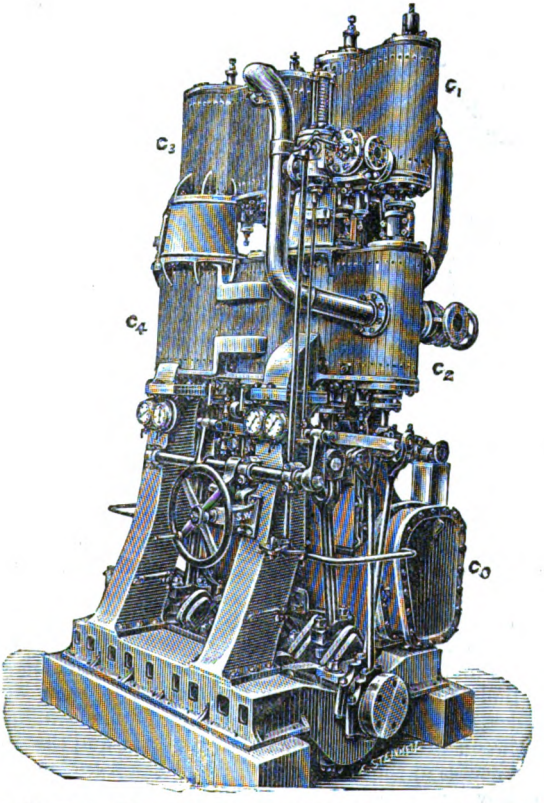

GENERAL VIEW OF RANKIN'S PATENT FOUR-CYLINDER DISCONNECTIVE QUADRUPLE EXPANSION COMPOUND MARINE ENGINE.

Digitized by Google

the condenser. On a further test for coal consumption, the engines developed 412 I.H.P. at 102·2 revolutions, expanding thirteen times, the temperature of the feed water being 150° Fah., and the vacuum 25 inches, using *only* 1·125 lb. of Penrikyber Welsh Coal per I.H.P. per hour. This result, which has probably never been surpassed, was obtained without using any other lubrication for the cylinders than the condensed steam which naturally took place to a certain extent inside them. With larger engines, such as would be required for an Atlantic Liner, the makers believe, that by adopting the quadruple-expansion principle, a consumption of 1 lb. per I.H.P. per hour, will yet be attained. In a cruise of 3,638 knots, the above-mentioned yacht's engines gave a mean consumption of 1·43 lbs. of average coal, including that used for steam to steering-gear and windlass.

Brock's Patent Quadruple-Expansion Engines. — It is unnecessary to go into a description of these engines as a whole, because, with the exception of the cylinders, valves, and connections, the design and arrangements are very similar to those of the best known form of inverted cylinder compound marine engine, such as that described in Lecture XVIII. In fact, this quadruple-expansion engine differs only in the substitution of a pair of tandem cylinders for the single high-pressure cylinder, and another pair of tandem cylinders for the single low-pressure cylinder. The main feature, therefore, of this particular design, is the use of four cylinders; the steam being expanded successively in each. By which means increased economy is obtained, due to higher pressures than can be efficiently used in the "triple-expansion" engine.

The use of tandem cylinders enables the four cylinders to be combined with only two cranks, thus saving the multiplication of working parts involved in the three-crank triple-expansion engine.

Such cylinders as hitherto constructed have been attended with considerable drawbacks, notably the double stuffing-boxes required between the cylinders for the piston-rods, and the difficulty of obtaining access to the lower cylinders for examination or repair, without removing the upper ones. This involved disconnecting valve gear, steam-pipes, and other connections, and consequently entailed considerable waste of time and expense to the owners. In the engines under description, it will be observed from the drawings that—

(1) The upper cylinders have no valves or pipe connections fixed to them.

(2) The distributing valves for all the cylinders are in casings attached to the lower cylinders.

Digitized by Google

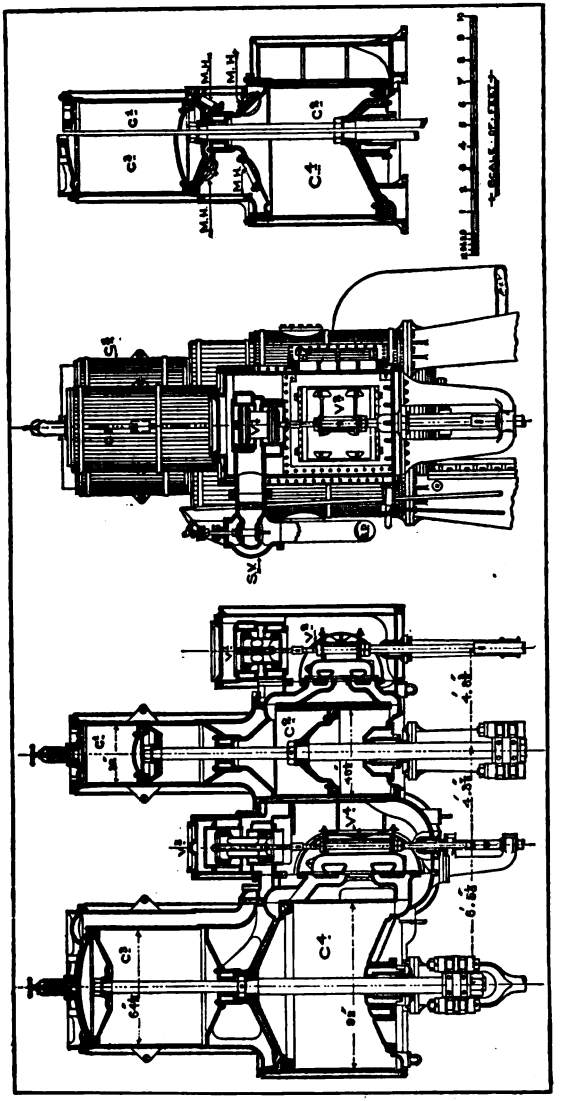

BROCK'S PATENT QUADRUPLE-EXPANSION ENGINES, AS FITTED BY MESSRS. DENNY & CO., OF DUMBARTON, TO THE S.S. "BUENOS AIRES."

Digitized by Google

(3) The number of stuffing-boxes is the same as for an ordinary compound engine, the usual upper tail rod stuffing boxes of such engines being, in this case, represented by the metallic packing for the piston-rods between the two cylinders.

(4) It will also be seen that the upper cylinders, being unencumbered by valve boxes and pipe connections, can be lifted from their place with almost as much facility as ordinary cylinder covers. This is seldom necessary, as it will be observed manhole doors, M H, are fitted in the top or cover of the lower cylinders, by which access is had to their interior, except when the cylinders are too small for this to be done, in which case they are unnecessary, the cylinders themselves being so easily lifted. Two doors opposite each other are also formed in the bottoms of each of the upper cylinders, by which easy access is obtained for examining or overhauling the metallic packing rings of the piston-rods.

The pistons are of cast-steel, formed conical, and of a single thickness of metal. The apices of the cones of the pistons of the upper and lower cylinders are turned towards each other, and the ends of the cylinders being made to fit, sufficient space is thus got between the cylinders for the doors described above, without adding to the total height of the engine. This is clearly shown in the cross-section through each pair of cylinders. It will be observed that the upper cylinders have piston valves, and the lower ones double-ported flat ones of the usual kind, the piston valve and the slide valve for each pair of cylinders being contained in the same casing. The high-pressure cylinder, C^1, and second cylinder, C^2, have one piston valve, V^1, and one slide valve, V^2, mounted on the same spindle, while the third, C^3, and low-pressure cylinder, C^4, have two piston valves, V^3, and two slide valves, V^4 (there being two valve spindles united by a crosshead underneath the stuffing-boxes). The piston valves, V^1 and V^3, are withdrawn when required, by removing the covers provided on the top of the casings.

The lower valves, V^2 and V^4, are arranged so as to slip off their spindles without the latter requiring to be disconnected, and are withdrawn with great facility when required, by doors provided at one side for the second cylinder, and at both sides for the low-pressure cylinder, all as clearly shown by the drawings.

The upper piston of each piston valve is made larger in diameter than the lower, by which means, as the entering steam is between the pistons, the weight of all the valves and gear is balanced, or as much so as may be desired.

The course of the steam through this engine is pretty clearly shown, or can easily be inferred from the figures, but it may be briefly described as follows:—

Digitized by Google

The steam from the boiler passes to the engine by a steam-pipe, S P, and stop valve, S V, and then enters by a passage formed between the two pistons of the high-pressure cylinder valve, V^1, from whence it is distributed in the usual way to passages leading to the top and bottom of cylinder, C^1. In this way, the only parts of the engine exposed to the full boiler pressure, are the small part of the valve casing between the pistons of the high-pressure valve, and the high-pressure cylinder itself.

The steam, on leaving this high-pressure cylinder, exhausts over the ends and down the centre of the piston valve, V^1, direct into the casing beneath for valve, V^2. This casing is made of considerable capacity in order to form a receiver between the two cylinders. The object of this is to enable the steam admission to the second cylinder to be closed sufficiently early to prevent the exhaust pressure in the high-pressure cylinder from falling too low. This was a great defect in the old double cylinder or "Woolf" compound engines, in which the exhaust pressure of the high-pressure cylinder was nearly as low as the final expansion pressure in the low-pressure cylinder, involving much larger ranges of temperature than was necessary.

From this casing the steam is distributed to the second cylinder in the usual way, and is then exhausted into a receiver cast round the second cylinder, as is usual in the high-pressure cylinder of ordinary compound engines. From thence, by suitable passages, it reaches the space between the pistons of the piston valves, V^3, of the third cylinder, and so on as described, for the first pair of cylinders, until it is exhausted into the condenser.

The following set of indicator diagrams have been reduced by photography from tracings of the originals that were taken from the cylinders of the S.S. *Buenos Aires* on the second trial trip run over the Skelmorlie measured mile on November 23, 1887. The diameters of the cylinders were $C^1 = 32''$, $C^2 = 46\frac{1}{2}''$, $C^3 = 64\frac{1}{2}''$, and $C^4 = 92''$, each with a 5-foot stroke. Steam was supplied at 169 lbs. by gauge, the vacuum was $25\frac{1}{2}''$, and the mean revolutions 68 per minute, which gave a total I.H.P. of 4,318, as shown by the sum of the indicated horse-powers of the four cylinders.

Digitized by Google

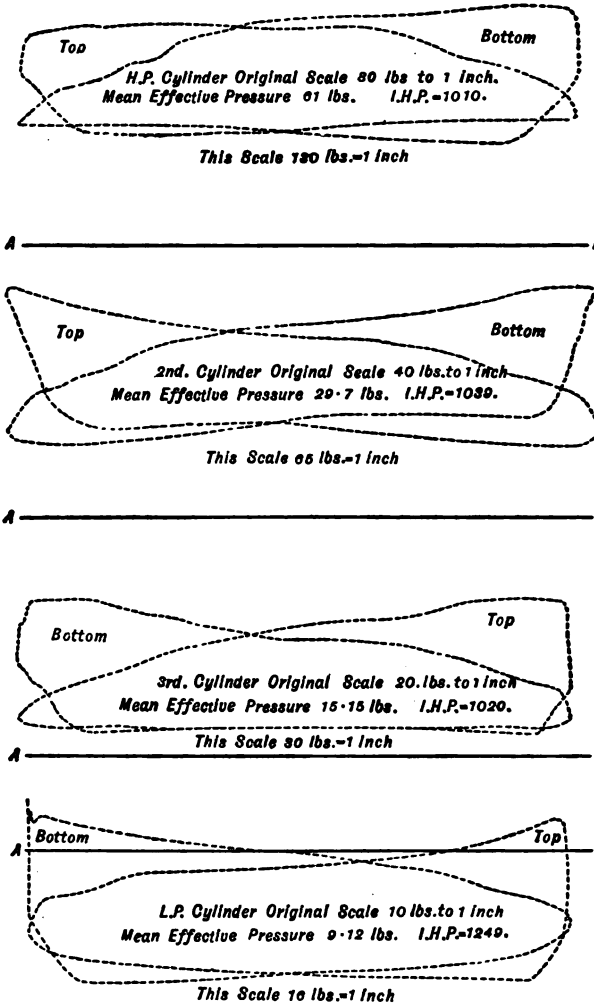

INDICATOR DIAGRAMS TAKEN FROM THE FOUR CYLINDERS OF THE S.S. "BUENOS AIRES" ON THE TRIAL TRIP.

Digitized by Google

LECTURE XXIV.—QUESTIONS.

1. Explain how greater economy of coal may be obtained by the triple-expansion engine than by a simple condensing, or by a simple compound engine. Give any authentic instances of the exact consumption of coal per I.H.P. per hour, by the three kinds of engines.

2. Work out in full and tabulate the maximum theoretical efficiencies due to using steam of different pressures, from atmospheric pressure to 300 lbs. pressure per square inch; also draw an efficiency curve from your results, to a scale of 1 inch = 50 lbs. pressure, and 1 inch = 10 per cent. efficiency.

3. To what causes do you attribute the difference between the maximum theoretical efficiency from using steam of high-pressure and the efficiency actually obtainable in a steam engine even of the best known type?

4. What good reasons have you for supposing that the practical limits of economy and safety have been nearly reached in the direction of high-pressure steam and multiple expansion in marine and other engines? In what other directions must engineers now turn their attention in order to attain greater economy of coal and steam?

5. Make a section through the cylinders and slide valves of a *tandem* engine, where the two pistons are on the same rod, and the steam exhausts directly from the high- to the low-pressure cylinder.

6. Sketch and describe fully by an index of parts any form of triple-expansion, marine, or other engine with which you may be acquainted.

7. Sketch and explain fully by an index of parts any form of quadruple-expansion engine with which you may be acquainted. What advantages are claimed for such engines arranged on Rankin's disconnective plan, whereby one portion of the engine may be worked while the other is idle?

8. Give complete freehand sketches through the cylinders and slide valves of Brock's patent quadruple-expansion marine engines. Explain in your own words the complete action and the advantages of this arrangement of cylinders and valves.

9. Reduce the indicator diagrams from the four cylinders of the S.S. *Buenos Aires* (page 263*e*) to one scale as explained in Lecture XV., pp. 129 to 134. Find the percentage difference of work done in one stroke between the combined area from these four reduced diagrams and the total area included by a curve drawn to the formula $p v^{\frac{10}{9}}$.

10. What would be the probable consumption of fuel per I.H.P. per hour in the most approved "simple-condensing" and "triple-expansion" engines respectively? State succinctly what are the differences, if any, in the initial or boiler pressures, in the grades of expansion, and in the construction of the slide valves of each cylinder of the triple engine, as compared with the single form, in order to obtain higher efficiency in the compounded engine. What reasons do you assign for the better result in the compound engine? (*Honours S. and A. Exam.*, 1889.)

Digitized by Google

LECTURE XXV.

CYLINDERS AND SLIDE VALVES.

CONTENTS.—Details of Engines*—Cylinders—Old D Slide Valve—Ordinary or Locomotive Slide Valve—Double-Ported Slide Valve—Gridiron Slide Valve—Thom's Patent Double-Ported Trick Valve—Piston Valve—Reversing Link Motion.

Details of Engines—Cylinders.—The necessary size of cylinder for any engine may be calculated by the formula relating to horse-power given in Lecture XVI., but in order to impress the method clearly on the memory of the student, we here repeat the formula in a more extended form.

Let D = Diameter of the cylinder in inches.
p = Mean pressure of steam in lbs. per square inch.
S = Speed of the piston in feet per minute.
H P = Horse-power which the engine is required to indicate.

Then, since the area of the cylinder $= \pi r^2 = \frac{\pi}{4} D^2$

We have— $$H P = \frac{p \times \frac{\pi}{4} D^2 \times S}{33{,}000}$$

And: $$D = \sqrt{\frac{H P \times 33{,}000}{p \times \frac{\pi}{4} \times S}} = \sqrt{\frac{H P \times 42{,}016}{p S}} = 205 \sqrt{\frac{H P}{p S}}.$$

Cast-iron is the material universally employed for the construction of steam engine cylinders. The inside of the cylinder barrel is usually fitted with a thin liner, which is made of a hard close-grained material capable of taking on a high polish and withstanding the rubbing action of the piston. If the liner becomes much worn, it may be taken out and replaced by a new one at a very small expense; or it may be re-bored if only slightly worn. In small engines it is not usual to fit the cylinders with liners, but the metal of the cylinder barrel is made thicker than is necessary, so that when the cylinder becomes much worn, it may be re-bored, and fitted with a new piston. When the cylinder is to be steam jacketed, a liner is now always employed, and steam is circulated round the annular space between the cylinder barrel and the liner. Liners are

* Students should compare the details in this Lecture with the specification given in Lecture XXIII.

Digitized by Google

usually constructed of hard cast-iron; but recently compressed steel liners, as manufactured by Sir Joseph Whitworth's patent process, have been largely employed, and have given satisfactory results. The method of fitting in these liners will be readily understood by reference to the diagram, p. 269. The interior of the cylinder barrel has a fitting strip at each end, which projects from $\frac{1}{2}$ in. to $\frac{3}{4}$ in. above the interior surface of the barrel itself; and these strips are bored out so as to fit exactly two similar strips on the external surface of the liner. The annular space between the liner and the cylinder barrel is therefore from 1 in. to $1\frac{1}{2}$ in., and the hot steam from the boiler is passed round this space. The liner is usually fixed in by an internal flange on its lower or inner end, which is sometimes recessed into a space in that end of the cylinder, and is attached to the cylinder end by screwed pins. To prevent waste of steam, it is necessary that the joints between the liner and the cylinder barrel should be steam tight, and at the inner joint this may be effected by the use of red lead, when the liner is being fixed in its place. At the back or upper end, however, a small groove is usually bored out at the joint immediately above the fitting strip, and this groove is packed with soft rope, asbestos, or some of the other packings in general use. The packing is kept in position by a thin wrought-iron ring which is fixed to the top of the liner. A very simple and efficient plan, is to caulk a thin copper ring into a space bored out for it above the fitting strip.

One of the ends of a steam engine cylinder, called the cover, is always bolted on, whilst the other is cast along with the cylinder barrel. Usually it is the back or upper end which is separate from the cylinder barrel. In large engines, and all jacketed engines, this cover is made hollow, and the flat sides are connected by ribs. In small engines, it consists simply of a circular plate of metal. This cover is held down by studs, which are screwed into a flange on the cylinder barrel, and are sufficiently strong to resist the full initial pressure of the steam acting on the area of the cover. The pitch of these studs must not be too great, since it then becomes difficult to keep the joint steam tight.

Relief valves are usually fitted to the cylinder cover and cylinder end, and consist of simple mushroom valves loaded with springs. (See figs., Lectures XX. and XXIII.) Their function is to allow a means of escape for the water which collects in the cylinder, either by the "priming" of the boiler, or by condensation of steam. When the piston approaches the end of its [illegible] forces the water which may have collected in the cyli[illegible] the clearance spaces; and if there is more than sufficie[illegible]

Digitized by Google

to fill the clearance spaces, the pressure put upon it opens the relief valves, and allows it to escape.

The steam ports and passages are almost always cast along with the cylinder barrel, and in small engines, the valve casing also forms part of the same casting. In large engines, however, the valve casing is bolted on. The face of the steam and exhaust ports, against which the slide valve works, is usually planed and scraped up to a true plane surface, so that it may form absolutely steam tight contact with the valve. Sometimes a valve face of a specially hard cast-iron is fixed on to the face of the steam ports (as shown in the figs., pp. 267, 269) so as to prevent excessive wear. It is generally attached by small screws, the heads of which are sunk below the flush of the valve face. In some few cases, bronze valve faces have been used; but these, although forming a good surface for the valve to work against, cannot be recommended, because when so fixed the bronze warps, due to its greater coefficient of expansion by heat.

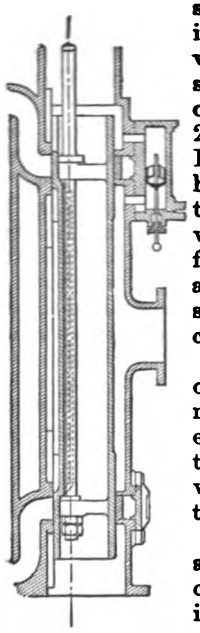

Long D Slide Valve.

Old D Slide Valves.—The action of the ordinary slide valve and the method of determining its principal dimensions were fully explained in Lecture XIII. We now purpose to illustrate a few of the forms of valves which have been or are in common use at the present time.

The first form of slide valve was that known as the D valve, from the resemblance of its cross section to the letter D, and it is shown in the annexed diagram.* This valve consists of a long semi-circular pipe, the flat side of which slides against the face of the ports, whilst the circular part moves steam tight against packing at each end. Steam usually enters at the valve casing by the pipe with the throttle valve, shown in the diagram; and is prevented from passing to the ends by the steam tight packing. Both ends of the casing in which the valve works are in direct communication with the condenser, so that when the valve moves up sufficiently, the inner edge of the upper steam port is opened to steam, while the lower steam port is opened to exhaust; and *vice versa* when the valve moves in the opposite direction.

Locomotive Slide Valve.—The valve which is in general use for

* Compare this figur[illegible] that on page 179 of our Elementary Manual.

Digitized by Google

small engines at the present time, and is generally known as the "locomotive slide valve" or ordinary three-ported valve, was illustrated in Lecture XIII. (see also diagram of Joy's valve gear, Lecture XX.; the triple expansion engines, Lecture XXIV.; and of the locomotive, Lecture XXX.) The great objection to a valve of this form is the large amount of power which is absorbed in moving it. The valve is subjected to the full initial pressure of the steam acting over its whole area, and is therefore pressed against the face of the ports with very great force, thus offering very considerable frictional resistance to motion. Many plans of relieving the valve from back pressure have been devised, and several are used in practice, but none of them have proved thoroughly satisfactory. The power required to move a slide valve depends upon the size or area of the valve, the pressure of the steam in the valve casing, and the length of travel of the valve.

Double-Ported Slide Valve.—In large engines, therefore, especially when working with high pressures, the power absorbed

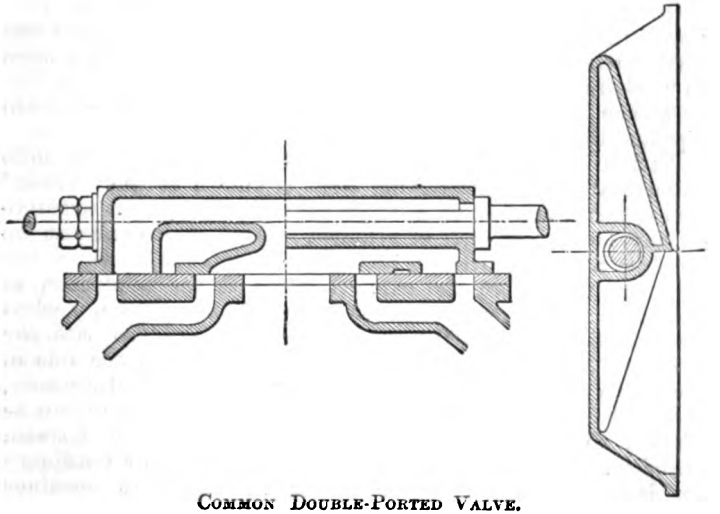

COMMON DOUBLE-PORTED VALVE.

in moving the slide valve becomes a very considerable item; and in order to reduce this absorption of power, double-ported valves have been commonly adopted. This valve is illustrated in the front elevation of the compound engines, Lecture XXIII.,* as applied to the low-pressure cylinder. It aims at lessening the

* See Seaton on *Marine Engineering*, pp. 235, 239, for separate cuts of double-ported slide valves and of relief frames, also our Elementary Manual, Lecture XXIII., by the same publishers.

Digitized by Google

expenditure of power in moving the valve by a reduction of its travel. It will be seen that there are two steam openings leading to the one steam port at each end of the cylinder, which are opened and closed by the slide valve. The upper opening gets steam from the valve casing direct by its upper edge, and exhausts round a passage at the back of the valve into the exhaust port; the inner opening gets steam from the valve casing through a transverse opening in the slide valve, and it exhausts directly into the exhaust port. A valve of this kind thus gives the same opening to steam as an ordinary locomotive slide valve with half the travel, and this would entail just half the expenditure of power in moving it, if the valve was of the same size; but owing to its construction, it is always somewhat larger than an ordinary valve doing the same work. There is, however, a considerable saving in power on the whole in the case of large steam cylinders by using this form of valve instead of the ordinary one, and hence its adoption in practice.

Gridiron Slide Valve.—Slide valves in which the steam port opening is divided into a number of narrow slits, in order to still further reduce the travel of the valve to a minimum, are known as "*gridiron*" valves, and were at one time commonly used as expansion or "cut-off" valves, being placed between the steam pipe and the main slide valve.

Thom's Patent Double-Ported Trick Slide valve.—This slide valve combines in one casting what is known as the "Trick" arrangement, applied to a valve having positive and negative exhaust lap at both ends of cylinder. The negative exhaust lap forming a communication between the opposite ends of the cylinder just before the exhaust opens to the condenser, as shown by the arrows, when the piston is in position, marked "communication open between ends of cylinder" so that the steam at its terminal pressure is transferred from one side of the piston to the other, compressed nearly up to initial pressure, and used over again on the return stroke. This valve can be adapted to suit either single-, double-, or triple-ported steam cylinders. The illustrations show it as applied to an ordinary double-ported marine engine cylinder. The port openings marked, A_1, A_2, are only used for exhausting, whilst those marked, B_1, B_2, are for steam and exhaust. Steam enters at both ends of the valve simultaneously, as shown by the arrows, similar to an ordinary "Trick" valve, but the ports, B_1, B_2, being wider than A_1, A_2, the full advantage of the steam coming through the passage in the back of the valve is obtained. It may also be adapted to suit the ports of an ordinary slide valve with equal width of ports.

Digitized by Google

In the first place, an amount of steam is saved in each revolution of the engine equivalent to the capacity of the steam ports, and clearance between the ends of the cylinder and piston, which in many cases is fully 5 per cent. of the total steam used, in addition to transferring the steam necessary to heat the cylinder after being cooled by communication with the condenser.

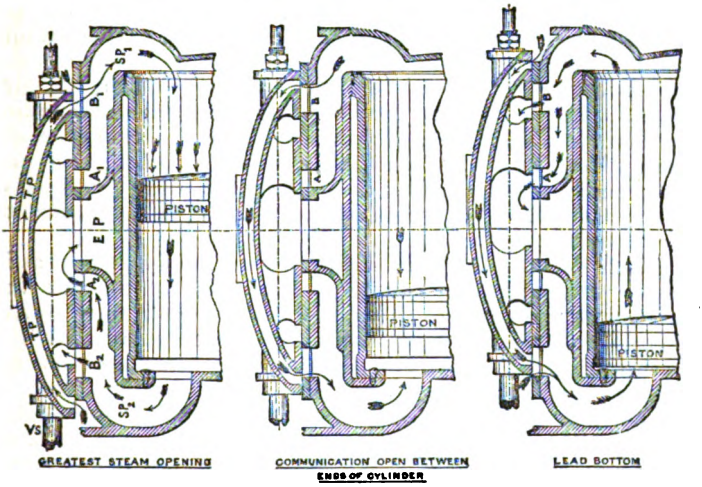

THOM'S DOUBLE-PORTED TRICK VALVE.

In the second place, with the ordinary slide valve, provided the vacuum is good and steam ports large enough, there is nothing or very little to compress in the low-pressure cylinder, and thus severe shocks are imparted to the several joints and moving parts. But, by the adoption of this arrangement of valve, the steam is taken from the other end of the cylinder, after performing all the work possible, and compressed *nearly* up to initial pressure, using the work stored in the piston for this purpose, so that there is a far less shock consequent on changing the direction of the motion of the piston, and more revolutions (the inventor asserts) can be got out of the engines with the same indicated horse-power.

As the change of pressure from the one side of the piston to the other passes through the stages—(1) release by communication opening; (2) compressing steam transferred; (3) exhaust opens to condenser; (4) steam at initial pressure enters—it is obvious that the engine turns the dead points with far less shock, than in

Digitized by Google

the ordinary arrangement of slide valve, where it is sometimes necessary to give great lead to the low-pressure valve, especially on the bottom centre, to arrest the momentum of the vertically moving parts. As, however, in the use of this valve, the work stored in the piston and other moving parts is used to compress steam taken from the opposite end of the cylinder, and is not thrown away against the steam admitted by the lead of the valve, as in the ordinary arrangement, no lead of the valve is necessary as here used, and the engine turns the centre without knocking, even if the brasses are rather slack.

A further advantage in the use of this valve lies in its being lighter than the ordinary double-ported slide valve, and taking up less space in depth, which enables it to be more easily overhauled. By its use, the friction on the cylinder port face is greatly reduced by the fact, that one port is always exposed to the pressure in the cylinder, thereby tending to reduce that on the valve face.

Piston Valve.—As we remarked before, no thoroughly satisfactory plan has yet been devised for relieving the ordinary slide valve from the pressure of steam upon its back surface; consequently, we find that now with the very high steam pressures carried in marine and other boilers (about 100 lbs. for compound, 150 lbs. for triple, and 180 to 200 lbs. on the square inch for quadruple-expansion engines), it has become absolutely necessary in the case of large engines, to adopt another form of valve for admitting and exhausting the steam from the high-pressure cylinders. This form of valve is known as the piston valve, and we illustrate one fitted with Thom's "trick" arrangement for producing sufficient compression on the exhausting side of the piston to turn the dead points smoothly, and to economise steam as explained above. It consists of two pistons, P_1, P_2, of cast-iron, connected together by a cast-iron pipe and fixed to the valve spindle, V S, as shown. These pistons fit and work in liners, L_1, L_2, inserted into the ends of a cylindrical chamber, C, bolted to the side, or to the end of the high-pressure steam cylinder. They are suitably packed with expanding rings, R_1, R_2, R_3, R_4, like locomotive piston rings, which are frequently made of bronze. The pistons, P_1, P_2, open and shut the two steam ports, S P_1, S P_2, from the steam chest, and the exhaust port, E P, in the same way as an ordinary slide valve does; but the area of steam port is much larger than that of an ordinary slide valve of the same size across, and there is no unbalanced pressure owing to its cylindrical form, hence no frictional wear and tear except that due to the pressure of the expansion rings R_1, R_2, R_3, R_4. To prevent these expansion rings from spring

Digitized by Google

outwards beyond the bore of the liners, L_1, L_2, when they come opposite the steam ports, $S P_1$, $S P_2$, the faces of the steam ports

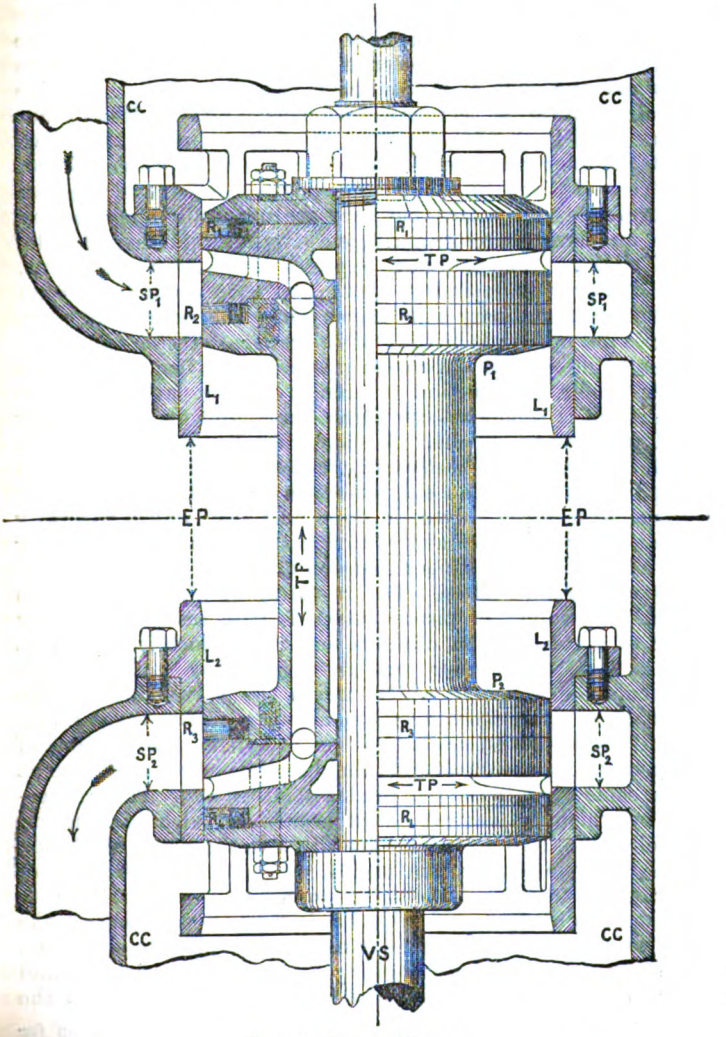

THOM'S PISTON VALVE.

Digitized by Google

in the liners are cast diagonally so —→W. With piston valves, the clearance spaces are naturally rather larger than with the ordinary slide valve, but this is minimised as much as possible by keeping the pistons, P_1, P_2, as far apart as practicable. The trick pipe or passage, for communicating with both ends of the valve, in order to effect the necessary compression when the piston comes near the ends of the cylinder, is seen at, T P. In large vertical piston valves, there is a small balance piston with cylinder (similar to B P, p. 234), fitted to the upper end of the valve spindle, in order to support the weight of the valve, valve spindle, eccentric rods, and links. Piston valves can be made lighter than ordinary slide valves, but they are essentially single-ported valves, and have therefore as a rule a longer travel than double-ported slides. One would have expected that with piston valves, much lighter valve spindles, links, and rods could have been used than with ordinary slide valves doing the same work; but this does not appear to be the case in practice. Piston valves are sometimes fitted with expansion piston valves inside the main valves. Their construction is similar to the latter, but the arrangement is somewhat complicated and difficult to get at for adjustment and for repairs. All the latest Transatlantic Liners, as well as many of the best passenger steamers, have been fitted with piston valves. The only objection or disadvantage usually urged against these valves, is their first cost, which naturally prevents their being commonly fitted to the low-pressure cylinder of compound, or of multiple expansion engines.

Reversing Link Motion.—The reversing of an engine which has ordinary slide * or piston valves, is most easily affected by means of a combination of links and rods, which is known as "*link motion.*" In order that an engine may work in both directions, the eccentric which moves the valve must always remain at a given fixed angle in advance of the crank; and evidently with one eccentric fixed on the shaft, the position of this advance is dependent upon the direction of rotation, and is not the same when the engine rotates in either way. The arrangement by which the desired object is attained with link motion is as follows:—Two eccentrics are fitted to the crank shaft side by side, the one being set in such a position relative to that of the crank, as to control the valve properly when the engine is going in one direction, and the other in a position to control the valve when the engine is rotating in the opposite direction. These eccentrics are connected by separate eccentric-rods and straps to the ends of a link, in which a block connected to the

* We have already described and illustrated the reversing motion for an Oscillating Engine in Lecture XIX., and Joy's Valve Gear in Lecture XX.

Digitized by Google

valve-rod is fixed, and which is capable of sliding from end to end. When the link is drawn to the one side, the block being stationary, comes into line with one of the eccentric-rods, and the valve is worked by that eccentric to which this rod is attached. If the link be pushed over to the other side, the other eccentric comes into play with the valve, and the engine rotates in the opposite direction. If the link be placed in such a position that the block which is connected to the valve stands in the middle of the link, then the engine stops, since the valve is thereby placed in mid-position, and simply travels to and fro over the valve port face, a distance nearly equal to the lap plus the lead.

The construction of these links is very various. One form is shown in the following figure.* It is a very simple form, and

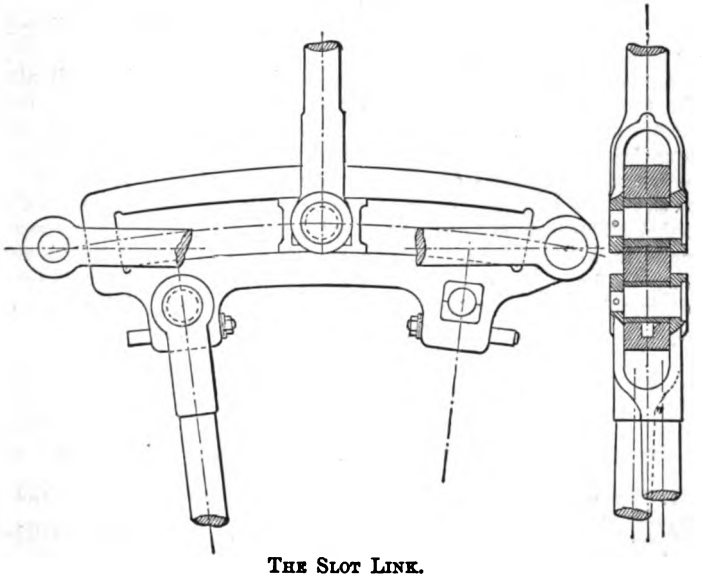

THE SLOT LINK.

has been used for small engines for many years. It consists of a flat piece of iron with a circular slot in it, in which a block attached to the valve-rod is fitted. This block is able to slide lengthwise along the link. The link has two snugs formed on one side for the attachment of the eccentric-rods; and also a

* Other forms are illustrated in Seaton's *Manual of Marine Engineering*, pp. 246–252, and in our Elementary Manual, Lecture XXIII.

Digitized by Google

snug at one end, by which the link is hung, and may be moved back and forward so as to bring the valve-rod over one eccentric-rod or the other. This link gives a more irregular motion to the valve than some of the other forms, although it works on the whole fairly well; but it is more difficult to adjust when it becomes worn.

Another form somewhat similar to the above will be found in the folding-page illustration of the locomotive, Lecture XXX. In it, the eccentric-rods are connected directly to the ends of the link, L, with the reversing gear lever, R G L, fixed to the lower end. The motion is still more irregular than that of the above form, but owing to its cheapness of manufacture, its simplicity, and solidity, it has been for a long time and is still retained in most locomotives; although Joy's valve gear, which we illustrated and explained in Lecture XX., is superseding it on some railway lines.

One of the best forms of link reversing motion (although also the most expensive) is shown in the diagrams of the engine, Lectures XXIII. and XXIV. There, the link is formed of two bars fixed together at the ends, and with the valve block sliding between them. The eccentric-rods are forked, and are attached to the links near the ends by pins, which are forged on to the links. The link is hung at the ends as before. In this arrangement it will be seen, that the centre of the eccentric-rod end may be brought to coincide with the centre of the valve-rod block, which gives a much more regular motion. The plan of adjustment for wear is all that could be desired.

LECTURE XXV.—QUESTIONS.

1. How would you calculate the necessary diameter of a cylinder in order to produce a certain horse-power?
2. Sketch in section, and describe a cylinder cover for a large marine engine.
3. Sketch a section through the cylinder of a powerful marine engine, showing a jacket, liner, the ports and passages, and slide valve with casing. How is the liner attached and fitted? Describe the process of making a liner of compressed steel.
4. Sketch in section a long D slide valve having lap on the steam side, together with the steam ports and passages. Explain the action of the valve, and show the manner in which the exhaust steam is passed to the condenser.
5. Describe a D slide valve without *lap*. Sketch the valve and ports, placing the valve in the middle of its stroke. Then show what you mean by giving *lap* and *lead* to the valve.

Digitized by Google

6. Draw a section of a locomotive slide valve and ports, showing the valve, (1) without lap, (2) with lap.

7. Describe the three-ported valve. How is the valve prepared and faced so as to be fitted for use? Sketch the valve and ports in section. Put the valve at middle of its stroke.

8. Sketch in section and describe a slide valve suitable for a double-acting engine, together with the steam ports or passages leading to the top and bottom of the cylinder. Be careful to show the manner in which the valve provides for the escape of steam. If the engine is single-acting, as in the case of a steam hammer, how should you alter the valve and the ports?

9. In marine engines with large cylinders it often becomes necessary to diminish the travel of the slide valve while keeping a considerable opening of the ports for the admission of steam. Sketch a section through a valve and ports, showing how this can be done, and put the valve in its position at the commencement of the stroke of the piston.

10. Sketch in plan and section any form of double-ported slide valve for a marine engine, and explain its action.

11. Sketch a double-ported slide valve, with a relief ring at the back of the valve. Show also in section the ports in the cylinder with the valve in the position it would have when the piston is at the end of a stroke. Describe the operation of setting the slide valve of a marine engine.

12. Under what circumstances are balanced slide valves employed? Sketch and describe a balanced slide valve for the high-pressure cylinder of a triple-expansion engine. (*Honours S. and A. Exam.*, 1889.)

13. What is an expansion valve? Sketch such a valve, and show where it is placed with reference to the ordinary slide valve, and explain the manner in which it acts.

14. A marine engine is provided with an ordinary three-ported valve, but has a back cut-off valve for varying the grades of expansion. Sketch the combination in section and explain its action.

15. Describe any form of valve suitable for an expansion valve, such as a gridiron valve in a condensing engine. Show the method of actuating such a valve, making any necessary sketches.

16. Sketch in section a double-ported slide valve with an expansion valve working at the back of it.

17. Sketch and describe, by an index of parts, Thom's double-ported "trick" slide valve.

18. Sketch and describe a piston valve. What are the reasons for adopting this form of valve in preference to ordinary slide valves? Explain its advantages and disadvantages.

19. Describe, with a sketch, the mode of reversing a marine engine when fitted with a single eccentric, and show that the mechanism becomes self-acting after the reversal.

20. Sketch Stephenson's double eccentric and link motion, name the several parts, and explain its action upon a slide valve. (*Adv. S. and A. Exam.*, 1889.)

21. Sketch and explain the mechanism for opening and closing the steam valve of a single-acting Cornish pumping engine. (*Adv. S. and A. Exam.*, 1887.)

22. Describe the modified form of D slide known as a double-ported slide valve. Sketch a section through the valve and ports, showing the position of the valve when just opening for steam. When is it desirable to adopt a valve of this construction? (*Adv. S. and A. Exam.*, 1887.)

Digitized by Google

LECTURE XXVI.

PISTONS, CONDENSERS, PUMPS, &c.

CONTENTS.—Details of Engines continued*—Pistons and Piston-Rods—Crossheads—Connecting-Rods—Crank Shafts—Main-Shaft Bearings—Thrust Bearings—Condensers, Jet and Surface—General Remarks on Condensers—Air Pumps—Air-Pump Valves—Circulating Pumps—Gwynne's Centrifugal Pumps.

Pistons and Piston-Rods. — A good piston, besides having sufficient strength to withstand the pressure to which it is subjected, should be absolutely steam tight, and should exert a uniform pressure all round its circumference; but this pressure should not be so great as to create excessive friction between it and the cylinder. The simplest form of piston is that used in locomotives and small engines (see folding-page of locomotive, Lecture XXX.) It consists of a simple disc of metal with a flange round one side, and a small boss in the centre to receive the piston-rod. The piston is kept steam tight by two or three metal packing rings, which are known as Ramsbottom's rings. These rings are turned rather larger in diameter than the bore of the cylinder, and are afterwards cut across, so that they may be compressed into it. They are fitted into recesses turned in the piston, and the cut joints of the rings are set at opposite sides of it. This form of piston is one of the very best yet devised, both for small cylinders and large, where high pressure steam is used.

Engine pistons above 20 inches diameter are usually constructed hollow, and the two sides are connected by ribs, although some very large pistons for fast-running engines have been made of cast-steel with only one thickness of metal and cone-shaped to give them sufficient strength, as shown in the first following diagram. The piston-rods are made of mild steel, turned and fitted as shown (see also connecting-rods, p. 282).

The old method of packing large pistons is shown on the opposite page.† One side of the piston is formed with a flange, and the other with a recess to receive the "*junk ring*." Between

* Students should compare the details in this Lecture with the specification given in Lecture XXIII. and Lecture XXI. of our Elementary Manual.

† From Seaton's *Manual of Marine Engineering*, p. 133, where the student will find several other modern forms of pistons illustrated and described. See also Lecture XXIV. for the pistons of S.S. *Buenos Ayres*.

Digitized by Google

Note.—In Mr. Kirk's pistons there is a "floating ring" for the springs to press against, which greatly helps to equalise the pressure round the circumference of the expansion ring.

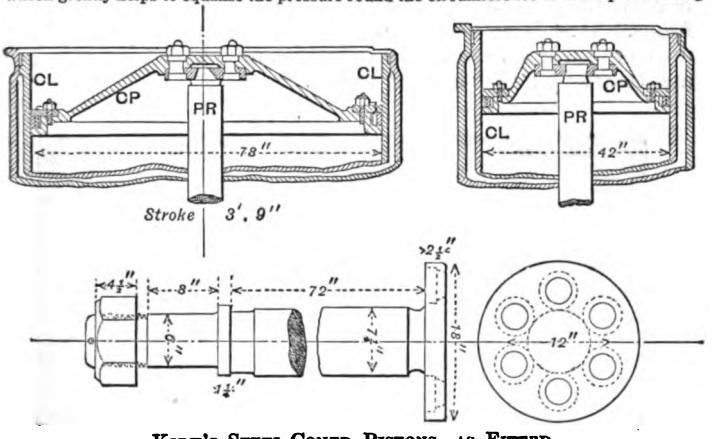

KIRK'S STEEL-CONED PISTONS, AS FITTED BY MESSRS. ROBERT NAPIER & SONS TO ENGINES 2,500 I.H.P.

C P for Coned pistons. P R for Piston-rods. C L for Cylinder liners.

this flange and junk ring, J R, a packing or expansion ring, E R, of cast-iron is fitted. This ring is pressed out against the sides of the cylinder by small springs as shown in the plan. The junk

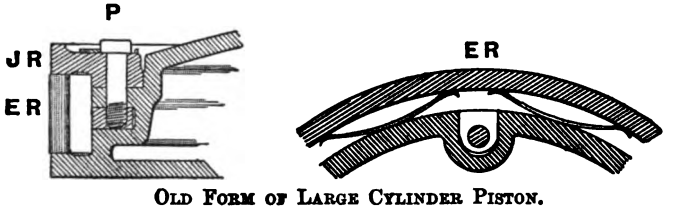

OLD FORM OF LARGE CYLINDER PISTON.

ring is fixed down by screwed pins, P, which screw into brass nuts; these brass nuts being recessed into the body of the piston at suitable intervals round its circumference. The defect of this form of piston lies in the springs, which can scarcely be adjusted to give uniform pressure at all parts of the ring; and since they press against the body of the piston, the packing ring is not free to move laterally, and follow out the bore of a cylinder when it has worn a little out of line with the piston-rod.

There is an immense variety of patent pistons, each having some particular feature or features claimed for it by the inventor

Digitized by Google

or manufacturer. The student has only to turn to the advertising pages of the *The Engineer*, or *Engineering*, and he will find several forms. It is impossible in a book of the present dimensions, to do more than select and describe with an illustration one type, and to briefly mention a few others.

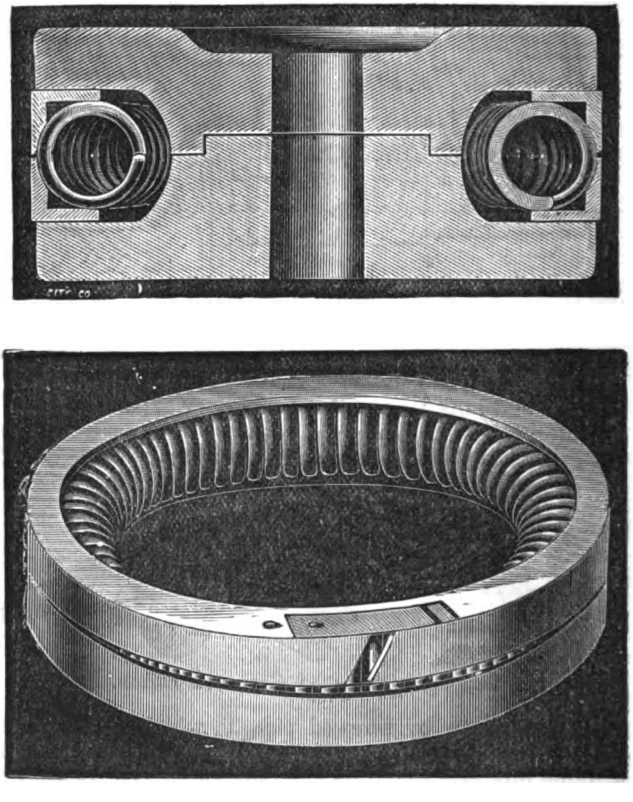

THE LANCASTER SPIRAL-SPRING PISTON.

From the accompanying illustration it will be seen, that the Lancaster piston consists of a straight spiral spring, bent into a circle, which forces the two piston rings out against the walls of the cylinder, and at the same time presses them firmly between the junk rings or halves, into which the piston is divided. The

Digitized by Google

pressure between the piston rings and the cylinder, results from the natural elasticity of the spiral spring trying to regain its natural shape, and does not depend upon screwing down of a junk ring, or bolting together the halves of the piston. There is, therefore, no danger of excessive friction being set up between the rings and the sides of the cylinder, or any opportunity for careless adjustment on the part of the engine-fitter, if the whole has been properly proportioned for the cylinder.

The packing rings in almost all pistons are simply cast-iron rings, which have been turned to a slightly larger diameter than that of the bore of the cylinder, and afterwards cut across to permit of compression, and of inserting them into the cylinder along with the piston. The slits in the rings are connected by a thin plate as shown, and they are placed diametrically opposite each other, in order to prevent the steam passing from one side of the piston to the other.

Buckley's patent piston (see illustration of engines, Lecture XXIII.) is somewhat similar in general design to the one we have just described; but instead of the packing rings being a couple of right angles [in section, they are obtuse angles on the inside thus ⟨ and the spiral spring is oval in form, or like the letter O. In Rowan's piston there are two oval springs instead of one, each spring acting on a packing ring independent of the other.

Mather & Platt's, and Oldham's pistons, have each the packing rings arranged like the "Lancaster," but the rings are pressed outwards against the sides of the cylinder, and upward and downward against the junk ring and the piston, by a spiral hoop having three or four turns, in its endeavour to unwind itself.

Crossheads.—The part which connects the end of the piston-rod to the connecting-rod, is termed the *crosshead*. In direct-acting engines, the crosshead requires to be supported by guides, in order to bear the side pressure thrown on it by the oblique action of the connecting-rod. If the crosshead were not supported, and the piston-rod not guided in any manner, then this side pressure (or pressure at right angles to the direction of motion of the piston) would cause injurious bending of the piston-rod, and very excessive wear of the glands and stuffing-boxes. In the case of a beam engine, the intervention of the parallel motion obviates the necessity for guides, since the piston-rod end moves in a straight line, and the side pressure is supported by the parallel motion bars.

Digitized by Google

There is a large variety of forms of crossheads in general use at the present time. In some engines, the crosshead is separate from the piston-rod, and is attached to it by means of a cotter which passes through both; in others, it is forged to the end of the piston-rod. The guide or slide blocks (which slide against a planed surface on the engine framing which supports the side pressure) are sometimes formed in the same piece as the crosshead, but more usually are separate and are fixed to it in a simple manner. In many horizontal land engines the slide blocks are attached to the ends of a horizontal bar fixed at right angles to the piston-rod, and with a square piece in the centre which forms the crosshead of the engine, and the blocks move over planed surfaces on each side of the engine framing. This plan is not, however, so good as that of supporting the crosshead immediately underneath it, and with the slide bed immediately below (or above, as the case may be) the line of the piston-rod (refer back to the figures in Lecture XVIII.) If the wear at the joint of the crosshead and connecting-rod is intended to take place in the connecting-rod, the pin which passes through both is *fixed* in the crosshead or forms part of it; and the connecting-rod rotates through a certain angle about the pin, and is fitted with bushes in order to provide for the wear. If, however, as is more generally the case, the wear is imposed upon the crosshead, the pin is then fixed in the connecting-rod end, and the crosshead is provided with bushes where the pin passes through it. The pin therefore oscillates with the connecting-rod.

The end elevation diagrams (Lectures XXIII. and XXIV.) show a form of crosshead very generally employed in marine practice. It is forged to the end of the piston-rod, and has a square hole cut out of it, to receive the bush which is formed in halves. The connecting-rod end is forked, and passes over the ends of the bush. The pin is prevented from turning in the connecting-rod, and all the wear takes place in the crosshead bush. The halves of this bush are held together by a wrought-iron cover with bolts passing through it. These bolts must be of sufficient section at the bottom of the thread to withstand a tension equal to the initial effective pressure of the steam multiplied by the area of the cylinder. The crosshead is carried out at the sides to receive two flat cast-iron slide plates or slippers, which bear against the planed columns, and resist the side pressure of the connecting-rod. These plates fit round the crosshead with three flanges only, so that they may be pushed into position, or taken out without disconnecting any of the larger parts; and they are prevented from slipping out

Digitized by Google

at the one side by small screwed pins which are fitted in all round.

For engines which require to rotate in one direction only, a slide block on one side of the piston-rod (that side against which the connecting-rod thrusts) is all that is necessary, and frequently marine engines which are but seldom required to be driven backwards, are thus fitted (see folding page, Lecture XXI.), but there, as in every case, two guide faces are required.

Connecting-Rods.—If an engine connecting-rod were of infinite length (*i.e.*, so long as to remain always parallel to the piston rod), there would be no side pressure on the guides of the engine, and the motion of the piston and crank would be a simple harmonic motion. But in practice, a certain definite length must be assigned to the connecting rod, therefore a certain amount of pressure is always thrown on the engine slides, and a certain amount of irregularity must take place in the motion. The shorter the connecting-rod the greater is the pressure on the guides, and the greater the irregularity in the motion. In practice, the length of the connecting-rod varies from two to three times the length of the stroke of the engine. Connecting-rods as short as the former proportion are found in marine practice, whilst those of the latter length are common in land engines. In some inverted-cylinder marine engines, especially those of the Royal Navy, which must be kept low down in the vessel, there is not sufficient head room for connecting-rods equal to two strokes in length, and, as a matter of necessity, shorter rods require to be put in; but they do not work satisfactorily, and create excessive pressure between the slides and blocks.

Connecting-rods require to stand alternately a tensile and a compressive stress, and to resist the latter without bending. They are usually made larger in diameter at the middle than at the ends, or gradually tapered from crosshead to the crank-shaft end. The ends of connecting-rods are formed in a variety of ways, but, as a rule, the crosshead end is forked, and has simply two solid eyes which receive the pin on each side of the crosshead. This is shown by the illustrations in Lectures XXI., XXIII. and XXIV. For land engines, the crank-pin end is often constructed as follows (see Lecture XVIII.):—The end of the rod proper is made rectangular, and the bushes which fit the crank-pin are made in halves; one-half being semi-circular on the back and the other half square. The rectangular end of the connecting-rod butts against the back of the inner square-half of the bush, and fits between its end flanges, whilst the [illegible] half of the bush is held by a wrought-iron strap which

Digitized by Google

passes round it, and is secured to the end of the connecting-rod by gibs and cotter. This is known as the "strap" end, and is found to work very satisfactorily, since the gib and cotter arrangement admits of adjustment when the bushes have worn slack. It is, however, a little more expensive to manufacture than some of the other equally good forms. The diagrams in Lectures XXIII. and XXIV. represent connecting-rods for marine engines, but rods of a similar construction are now in common use for land engines. The crank-pin end is of a T shape, and has a semi-circular hole cut in it to receive one-half of the crank-pin bush. The cover which is formed to receive the other half bush, is fixed to the T end by means of bolts. The crosshead end of the rod is forked, and fits exactly over the bushes of the crosshead. The crosshead pin is fixed into the forked end of the connecting-rod, and turns in the bushes of the crosshead.

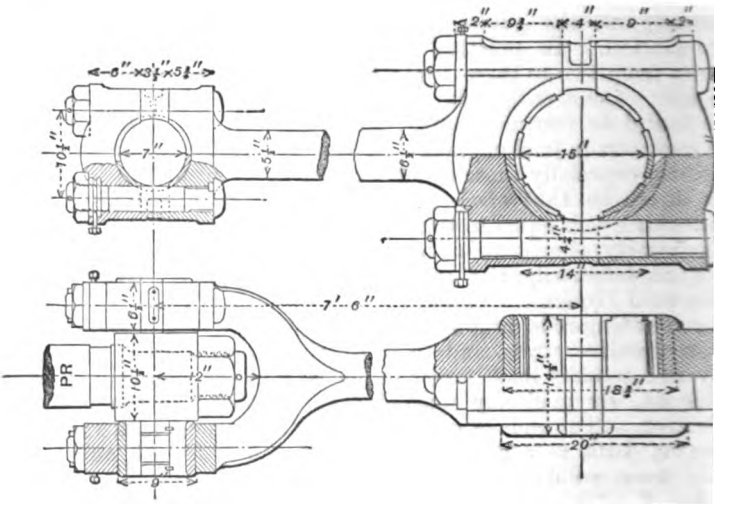

STEEL CONNECTING-ROD AS FITTED BY MESSRS. ROBERT NAPIER & S TO ENGINES 2,500 I.H.P.

As an example of large steel connecting-rods, we here trate those designed by Mr. Kirk for the same engines a steel pistons and piston-rods described at p. 277. The dra is self explanatory.

Crank Shafts.—Crank shafts for land engines have frequ

Digitized by Google

only a single crank, which is fixed to the end of the shaft, and overhung on one side of the main bearing. In marine practice, however, a double crank is almost invariably used. For engines having crank shafts up to 12 ins. or 15 ins. diameter these cranks are always forged with the shaft, but when the crank shaft is of larger dimensions, the cranks are usually built in separate pieces (see specification Lecture XXIII.)

We take the liberty of reproducing the following remarks from a very practical article which appeared in "*Industries*," July 16th, 1886, on the "Building of Crank Shafts," and refer the student to the same for the complete description of how the *City of Rome's* crank shafts were set and fixed.

"With the rapid increase which has of late years taken place in the dimensions of marine engines, a change has also come about in the methods of making crank shafts. The old-fashioned wrought-iron shafts have been partly replaced by those of steel, in order to get rid of the uncertainty which is always felt about the soundness and continuity of the metal in heavy built-up masses of wrought iron, also to reduce the size of crank journals and pins and connecting-rod ends, and thus reduce the friction of the engines; the decreased weight of these parts when made in steel also helps slightly to increase the carrying power of the ship, by keeping down the weight of the propelling machinery to its lowest limits.

"The solid steel cranks which have replaced those of wrought iron have not in every case been successful, as several of them have failed after a comparatively short life, by breaking at the junction of either the crank-pin or shaft with the web. This trouble has been partly overcome by the use of softer steels, and by the careful annealing of the forgings before being sent into the machine shops, and also by increasing the radius of the corners of the necks and pins, and lastly by paying better attention to the rigidity of the engine seats, and adjustment of the bearings, so that the cranks may be only subjected to the stress necessary to drive the propeller, and not to any strains set up by bad workmanship.

"To reduce this evil still further, built shafts were proposed, and scheme after scheme has been patented with the object of allowing the different parts of the crank-shaft to be so independent of each other that no strain would be set up in them by irregular setting or wearing of the bearings, or distortion caused in any other way, and also that if one part should fail the whole crank need not be consigned to the scrap heap.

"The most common method is to simply fasten the shafts and into flat slabs which form the webs, and, given good steel

Digitized by Google

and workmanship, this method is probably as good as any. The usual arrangement of manufacture is to rough-machine the parts, fasten them together, and then turn the crank all over just as a solid forging would be finished; but a great deal of the cost of this operation may be avoided by the use of proper appliances in building up."

The following figure illustrates one of the three cranks of the S.S. *City of Rome*, which were made at Sir Joseph Whitworth's works, Manchester. The whole crank-shaft is one of the heaviest and largest yet made, for when finished and bolted together its weight amounted to 63 tons.

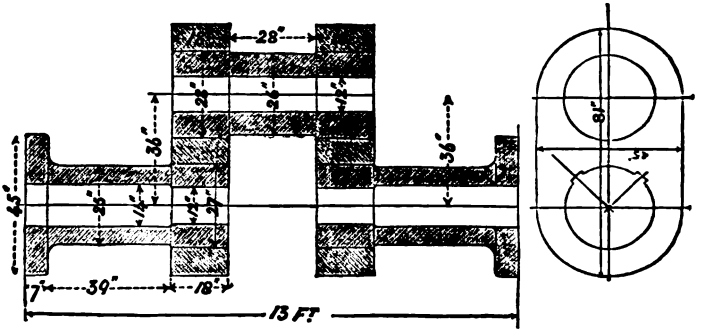

ONE CRANK OF S.S. "CITY OF ROME."

"The crank was made throughout of fluid compressed steel, and was forged entirely under Sir J. Whitworth's patent hydraulic forging presses. The pins were forged hollow, turned to size and rough-bored, oil hardened, and ground up true in the lathe by emery wheels, and polished on the bearings; they were thus completely finished before being shrunk in the webs. The webs were forged from very heavy ingots into slabs, the ends then punched and forged all round the eye on a mandril. They were then planed, bored together in pairs, slotted round the ends, filed, and polished. The shafts were forged hollow, and the collars afterwards forged out to the proper diameter. They were then finish-turned on the parts fitting into the crank webs, rough-bored, and rough-turned all over, one-twentieth of an inch in diameter being allowed for turning and polishing, after the parts had been shrunk together. The webs were keyed as well as shrunk on to the shafts, and so the real operation was to cut the keyways."

The allowance for shrinkage was $\frac{1}{1000}$th of the diameter, which

Digitized by Google

amount was determined as most suitable by trial with specimen pieces, after observing what force was required to push the one part from the other.

In order to estimate the correct diameter of crank-shaft for a given engine it is necessary to construct the diagram of twisting moments by the method shown in Lecture XVII. The maximum twisting moment on the shaft is then obtained, and when equated to the resistance of the shaft to torsion gives the diameter required.* A certain amount of bending is also produced by the pressure on the crank-pin and must also be taken into account by reducing it along with the twisting moment to *one equivalent twisting moment*.† The bending action is greatest when the crank is at the dead points.

Main Shaft Bearings.—The main shaft bearings of most forms of engine present no special feature, unless it be that they are, as a rule, more substantial in construction than ordinary bearings. They are subjected to severe jerks and shocks, due to the irregularities in the motion of the piston, and for this reason should be specially well fitted to, or cast along with, the sole-plate or engine framing. The brasses are sometimes made adjustable so that the wear may be taken up periodically, but when the attainment of adjustment is obtained at the expense of the rigidity of the bearing (as is sometimes the case) it is more a disadvantage than otherwise. Large engines have rarely any special means of adjustment, but the bushes are usually lined with white metal, and when this becomes worn it may be easily renewed. The lubrication of crank-shaft bearings is a matter of great importance and should receive careful attention.

Thrust Bearings.—In marine screw engines it is necessary to provide some means of taking up the longitudinal thrust of the screw propeller. In small engines this is often done by a simple collar on the shaft which bears against the flange of the aft main bush in the sole-plate, but when the thrust is great, this plan is not sufficient and a "thrust block" is fitted. The form of thrust block which, until recently, was chiefly in use is shown in the next diagram.‡ An enlarged portion of the screw shaft has a number of rings cut in it, and these rings fit into corresponding

* The safe stress which can be put on a crank-shaft is pretty much a matter of experience, and hence there are various constants adopted by different makers.

† See Seaton's *Marine Engineering*, p. 157, and Rankine's *Rules and Tables*, p. 227, for solution of the combined action of these two stresses. The bending action is generally the most important element to be taken into account in determining the diameter of the crank-pin, and the dimensions of the webs.

‡ This cut and the next are from Seaton's *Marine Engineering*, to which the student should refer for rules and dimensions of crank-shafts and thrust [illegible] &c.

Digitized by Google

recesses in a large brass bush. These recesses are formed either by having rectangular grooves bored out of the brass or by the insertion of brass rings into checks bored out to receive them, as shown in the above figure. This arrangement has been found to work very well when kept within limits as to size, and when

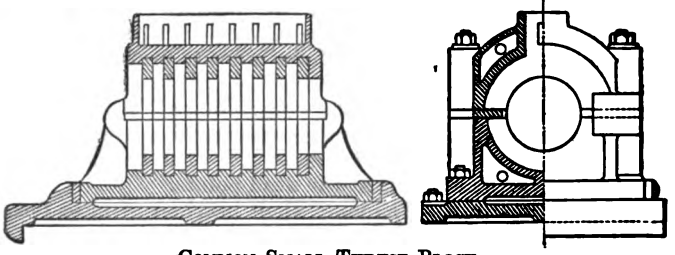

COMMON SMALL THRUST BLOCK.

effectually prevented from heating. When it heats it gives great trouble, and adjustment cannot well be effected at sea.

A much better form of thrust block is shown in the next fig. In this block, the thrust is supported by independent horse-shoe shaped pieces of cast iron, which are faced with white metal. These thrust pieces fit between rings turned on the screw shaft. They are secured on each side of the shaft to the thrust block, but are capable of independent adjustment by means of the nuts and set screws on each side, or, of adjustment as a whole, by the nuts at each end of the rods which support them at the sides. This block has some advantages over the old form, the principal of which are—(1) The thrust pieces are separate and independent of each other, and they may be adjusted, or taken out separately for examination, without stopping the engines. (2) The lubrication is more easily effected, since the hollow casing of the thrust block may be filled with oil and soapy water. The rings on the shaft revolve in this mixture and thus every part of the bearing is kept continuously lubricated with little attention and trouble.

A thrust bearing of course affords no lateral or vertical support to the shaft, its office is simply that of taking the end thrust, and consequently the shaft should always be supported close to the thrust bearing by an ordinary pillow block.*

Condensers.—Condensers are of two kinds, *jet* condensers and *surface* condensers. In the jet condenser the steam is condensed by being brought into actual contact with cold water, while in

* For diagrams and description of Thomson's Coupling for Broken Shafts, see *Industries*, 20th August, 1886.

Digitized by Google

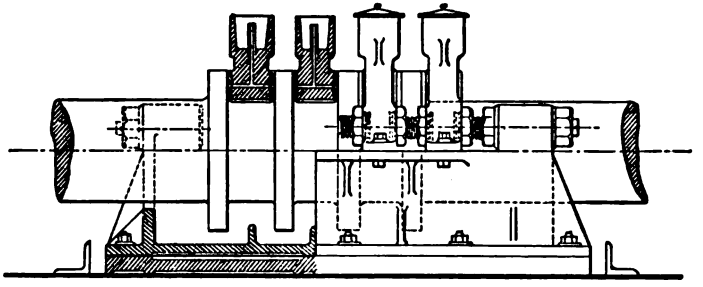

HALF-SECTION AND SIDE VIEW.—LARGE IMPROVED THRUST BLOCK.

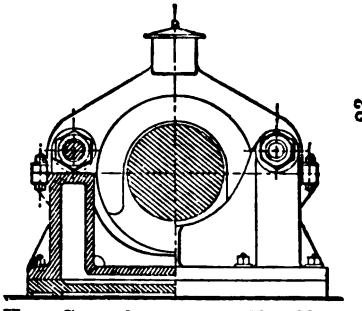

HALF CROSS-SECTION AND END VIEW.

23

the surface condenser the steam condenses upon thin metallic surfaces, which are kept cold by cold water circulating on the other side.

*Jet Condensers.**—Jet condensers may be of almost any form which is suitable for the engines to which they are to be fitted. They consist essentially of a cast-iron chamber, into which the exhaust steam from the cylinder of the engine passes, and comes in contact with a jet or spray of cold water also issuing into it. The bottom of this chamber is connected to a pump known as the air-pump, the function of which is to draw off the water and any air or vapour which may be in the chamber. The condensing chamber or condenser must be of sufficient capacity to prevent flooding, *i.e.*, becoming filled with water, but should not be larger than is necessary, since then the air-pump takes longer to form a vacuum after the engines start. The bottom of the condenser should be inclined towards the side to which the air-pump is connected, so that all the water may run into the suction end of

* See Figures of Watt's Engines, Lecture II., also Lectures XIX., XX., and XXI. for positions and forms of condensers.

Digitized by Google

pump. The inlet for the steam should be high up in the condenser, and is usually a plain pipe. The water injection inlet should be formed with a perforated pipe or rose carried well into the middle of the condenser, or opposite the end of the steam pipe, so that the water may be fairly distributed, and the condensation of the steam be almost instantaneous. If the condenser is very large, or of a long shape, two rose injection pipes may be fitted with advantage. The calculations as to the amount of water required for condensation have been fully gone into in Lectures IX. and X.

*Surface Condenser.**—The surface condenser as usually made, consists of a cast-iron chamber, having a large number of thin brass tubes passing from one side or end to the other. These tubes are kept cold by forcing cold water through them by means of the pump known as the circulating pump. The exhaust steam, which is admitted into the condensing chamber comes into contact with the exterior surface of the tubes, and is condensed by the cooling effect of the water they contain. In some few cases this order of things has been reversed, and the steam passed through the tubes while the cold water is circulated outside. "Baffle" plates are usually fitted immediately opposite the steam entrance, in order to distribute the steam evenly over the tubes. The condenser tubes are usually divided into groups or tiers. The cold water is forced through one tier of tubes, and then returned back across or along the condenser by another tier. The number of tiers is usually from two to four. The best method of working is to cause the hottest water to meet the hottest steam. Thus, if the steam enters at the top of the condenser, and the tubes are horizontal (as in most marine engines), the cold water should be forced in at the bottom, and passed first through the lowest group of tubes, returning along the group next above the lowest. The water is thereby considerably raised in temperature, and just previous to its being discharged from the condenser it passes through the highest group of tubes, which group is first acted upon by the steam. The condenser tubes are usually about $\frac{3}{4}$ inch outside diameter and are of brass. They are fitted into brass tube plates, and packed to prevent leakage. The methods of packing them are very various, but one of the best which is in general use is worthy of notice, and is shown in the figure.† The brass tu

* See Figures in Lectures XXI., XXIII., and XXIV., for position forms of surface condensers; also our Elementary Manual, Lecture XXI

† See Seaton on *Marine Engineering*, page 201, for six different meth of packing condenser tubes.

Digitized by Google

plate is from 1 to 1¼ inch thick, and has holes bored in it to receive the tubes. These holes are bored ¼ inch or thereby larger in diameter than the tubes, for about ¾ inch into the thickness of the plate, and are screwed so as to receive small brass stuffing glands. The diameter of the holes for the remainder of their length being only slightly larger than that of the tubes to allow freedom for packing. Hemp or other suitable packing is wound round the tubes in the annular spaces between the tubes and the plate, and this packing is held firmly in position by the screwed glands. The glands are simply brass ferrules (screwed in long lengths from ordinary brass tubing, cut off with a circular saw, and notched), which fit loosely on the tubes, and are screwed externally to fit the screwed hole in the tube plate. They have a slit on one end, so that they may be screwed home by means of a brace fitted with a screw-driver bit. It will be observed from the figure, that there is a small internal shoulder. This should always be adopted whether the condenser tubes are to be vertical or horizontal for the purpose of preventing any end movement. Even with horizontal tubes a little creeping might take place due to expansion and contraction.

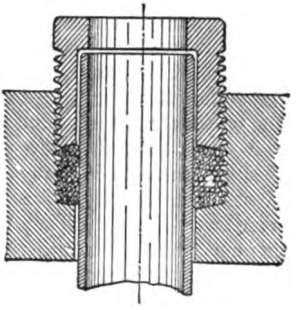

CONDENSER TUBE PACKING.

General Remarks on Condensers.—Jet condensers are largely used for land engines, and as far as mere efficiency goes they are quite as good as surface condensers. The great objection to the jet condenser is, that the water formed by condensing the steam mixes with the water used for condensation; and, since the feed water for the boiler is drawn from the hot well, if the water used for condensation be dirty, or otherwise impure, the boiler becomes clagged with mud, and the plates encrusted with other impurities. This necessitates a constant cleaning out of the boiler, and by corrosion, and the greater tendency to overheating, greatly shortens its life. In land practice, where good water may be obtained for condensation, jet condensers are always used, but if the water to be used for this purpose be impure, surface condensers should be adopted. Although they are more expensive than jet condensers, they will soon repay the difference of first cost in saving the boiler from deterioration. In modern marine practice surface condensers are invariably [illegible] in fact, their introduction marked a new era in marine [illegible], since they render high-pressure steam available

Digitized by Google

for practical use. High-pressure steam cannot be adopted in conjunction with the jet condenser, for the following reasons:— In old marine engines with jet condensers, the highest steam pressure that could be conveniently carried was from 30 to 35 lbs., not from the mere mechanical difficulty of making the boilers strong enough to carry a higher pressure, but from the fact that they got quickly "salted-up" whenever the pressure exceeded that figure. The boilers were practically fed with salt water, for the water employed to condense the steam was drawn direct from the sea, and after mixing with the condensed steam, the major portion of it was thrown back into the sea by the air-pump, while a comparatively small quantity of it was pumped into the boiler by the feed-pump. The consequence of thus feeding boilers with salt water was, that deposits of sulphate and carbonate of lime, &c., took place, but by frequently blowing out the scum and the loose sediment by surface and bottom blow-off cocks, a careful engineer could keep his boilers fairly clean and free from these incrustations.* When, however, the pressure was raised *above* 35 lbs. by gauge, or 50 lbs. absolute (corresponding to a temperature of 281° Fah., see table, Lecture VII.), the lime and other impurities (which, to a great extent, had been held in solution by the water at that and at other lower temperatures corresponding to lower pressures), so quickly precipitated, that no economical amount of "blowing off" could cope with it, and boilers not only became unmanageable, but actually dangerous. Blowing off the hot water was in any case, *however* sparingly and carefully done, a costly procedure, and when it had to be resorted to frequently, it meant a very great waste of coal. The danger arose from the tops of the furnace flues getting red-hot and coming down into the fires, due to the thick crust of lime on the water side preventing the water coming into near contact with them; besides which, this crust or scale when it became highly heated, sometimes cracked, and permitted the water to come into direct contact with the red-hot plates, thus suddenly generating a large quantity of steam of a pressure beyond what the area of the safety valves could freely and quickly let away. With the surface condenser, the condensed steam, and consequently the feed water, are kept entirely separate

* The quantity of chemical salts held in solution by the water, or, in other words, the density of the water is ascertained by simply running off a little of it (by a special cock fitted to the front of the boiler) into a deep can, and inserting in it a hydrometer or salinometer graduated in 32nds. For example, suppose the hydrometer sinks in the water to the mark 3, then the water is said to have $\frac{3}{32}$ of saltness. It would certainly be better if instruments were so marked as to be read off in percentages of the density of fresh or of salt water.

Digitized by Google

from the circulating water, and only a very little salt water (or better fresh water from a separate condenser or fresh-water tank) has to be added by an auxiliary feed pipe, in order to make up for any leakage that may take place. A careful engineer has therefore little or no necessity for blowing off, and he can run his boilers for two months at a time without changing the water in them, or allowing more deposit to accumulate than a thin skin about the thickness of a sixpence, which is considered beneficial if evenly deposited, as it prevents pitting of the boiler plates.

Air-Pumps.*—As we have remarked before, the duty of the air-pump in the case of a jet condenser is to discharge the whole of the condensing and condensed water as well as the air into the hot-well, and in the case of a surface condenser to free the same of the condensed water as well as the air and the vapour which has been set free. Water contains a large proportion of air mixed with it, unless it has been expelled by one or other of the special methods now adopted in connection with high-pressure engines, such as Weir's patent feed-water heater and air extractor. This air expands in the condenser, and would considerably diminish the vacuum if it was not taken out at every stroke of the air-pump. Besides this air, there would, of course, be an accumulation of vapour or low-pressure steam in the condenser, from the condensed water under the action of a partial vacuum or low pressure, and this vapour would soon fill the condenser and also spoil the vacuum if it were not extracted by the air-pump. Consequently, we see that the chief work that the air-pump has to perform is to free the surface condenser of air and vapour, for a very small pump would suffice to extract the condensed steam. Care must, therefore, be taken not only to have a thoroughly efficient, but also a sufficiently large air-pump, in order to maintain a good vacuum—say equivalent to from 26 to 27 inches on the barometric column.

In Lecture XXIII., in the side elevation of the compound engines, a vertical single-acting air-pump is shown in section and described in the specification. In Lecture XXI., a double-acting one is shown in the small section of Penn's trunk engine; and the circulating pump shown in section in the folding page of the triple-expansion engines, Lecture XXIV., is the same as the air-pump. Horizontal air-pumps are from necessity almost always double-acting, and vertical ones generally single-acting. The chief difference between the two kinds lies in this, that in the case of the double-acting air-pump the bucket is closed or solid, and there is a complete set of suction and delivery valves at each [illegible] pump; whereas, in the single-acting one, the bucket

* [illegible]ary Manual for detail drawings of the Air and Circulating [illegible]*vald.*

Digitized by Google

is fitted with valves of the same size and often of the same shape as the foot valves at the base and the delivery valves at the top of the pump. The efficiency or volume of water and air which can be extracted for a certain expenditure of power is much greater, as a rule, in the single-acting vertical air-pump, than in the double-acting horizontal one, from the fact that the flow of water, &c., being always in one direction, its momentum is not checked, the valves from their natural position fall down on their seats, and as there is always some water on them, they are more easily kept tight, and less clearance can be allowed between the bucket and the foot and delivery valves.

Air and Circulating Pump Valves.—The importance as well as the difficulty of getting thoroughly reliable and lasting valves for air and circulating pumps, is shown by the large variety of devices that have been proposed and tried. One of the latest of these patent plans is shown in the following figure.

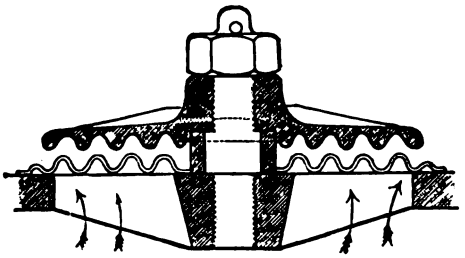

BELDAM'S CORRUGATED METALLIC VALVE.

It was devised by Mr. Beldam, a practical marine engineer, who now acts as consulting engineer to the Eastern Telegraph Company, &c., and he claims the following advantages for it over the common india-rubber valve—viz., that it holds the vacuum better, lasts longer, is not affected by oils or temperatures, and does not deteriorate by being kept in stock; further, that it is not liable to crack like some other metallic valves. These advantages seem to have been realised in a number of steamers in which it has been fitted, as they have been certified by several of the chief engineers of these vessels, who seem to have given it a fair trial.

Its construction will be easily understood from the figure and the following description:—The upper part or "check" for the valve is screwed on and fixed to the central stud by a nut and split pin. Its under surface is corrugated as shown. The lower part or the valve seat is made open ribbed to permit the water to pass through it easily, and it is fixed into the orifice where the valve is intended to act, either in the foot valve chamber, or the air-pump bucket, or the delivery valve chamber. The central thin corrugated sheet or valve proper, is fixed at its centre to a

Digitized by Google

loose ferrule which fits the parallel portion of the central stud. This admits of the valve and central ferrule freely rising and falling down to its seat as a whole. The chief object of using the corrugated plate being that, for a very thin and comparatively light plate, you get a much stiffer and stronger valve than you would from a plain plate.

Circulating Pumps.—Circulating pumps are employed only in connection with surface condensers. They are of three kinds—single, or double-acting reciprocating, or rotary pumps. The single- or the double-acting reciprocating pumps are almost precisely similar in form and construction to the single- or double-acting air-pumps just described (see Lecture XXIV., folding page for a section of a double-acting circulating pump). The single-acting pump should, however, be provided with a good-sized air vessel, about double the capacity of the pump, in order to cause a steady flow of water through the condenser tubes, and both it and the double-acting one should have a small inlet air-valve or pet valve, so placed as to automatically admit a sufficient quantity of air to act as a cushion, and thus prevent the natural vibration and noise due to the momentum of the water, as well as a pipe and cock, or bye pass connecting the suction and delivery chambers, to regulate the supply of water without putting any over-stress on the pump.

Centrifugal Pump.—In large steamers where there is plenty of room, it is now usual to employ either a double set of rotary or centrifugal pumps, or one centrifugal pump in addition to the ordinary circulating pump worked by the main engines. One of these pumps, as manufactured by Messrs. J. & H. Gwynne, is illustrated in the following figures. The pump itself consists

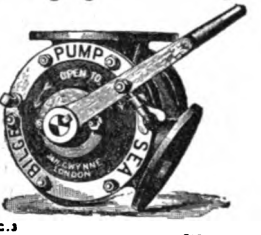

FIG. 3 FIG. 4

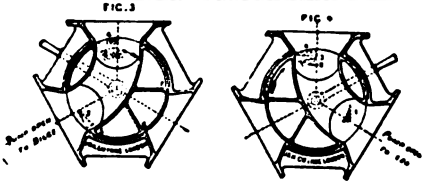

A AND BILGE COCK FOR CIRCULATING PUMP.

Digitized by Google

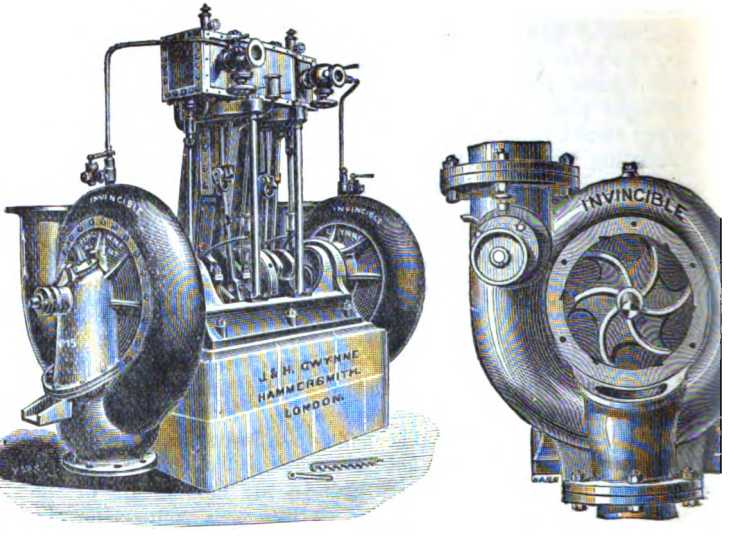

GWYNNE'S CENTRIFUGAL-CIRCULATING PUMP.

of a wheel with vanes (curved backwards from the direction rotation) moving inside a closed snail-like chamber. The wat enters at the centre of the vanes from a suction pipe commu cating with the sea or the bilges, through the special form of co (p. 293). The suction pipe is attached to the lower central flan of the Gwynne pump, and the water having a rapid circul motion imparted to it by the rotating vanes, it escapes wi considerable tangential force by the upper flange at the ba side; thence it passes through the tiers of condenser tu back to the sea by the discharge pipe, in a continuous strea The pump or pumps are secured to the bed plate of a pair small vertical fast-speed Gwynne engines, so that the spindle spindles may be coupled direct to the engine crank shaft. T general arrangement will be easily understood and follow from the figures.

This form of pump has several important advantages over single or double-acting reciprocating pumps.

1. There are no valves in it to throttle the flow of the wa or to get out of order.

2. The stream of water being continuous and uniform volume, all intermittent shocks and arrangements for prevent these are avoided.

Digitized by Google

3. A supply of cooling water may be sent through the condenser while "blowing through" and before starting the main engines, thus preventing over-heating the condenser, and ensuring a good vacuum at the very first start.

4. The amount of circulating water may be varied at pleasure, according to circumstances, by simply running the circulating pump fast or slow.

5. Its efficiency is greater than that of reciprocating pumps for the purpose in view.

6. If there are two sets, the one can be taken to pieces and cleaned or repaired while the other is at work, without stopping the engines, which cannot be done with reciprocating pumps, as usually fitted to and worked by the main engines.

The first cost may be greater, and the attention required to be given to them quite as much as in the case of the reciprocating pump, but owing to the combination of advantages stated above, they are being now almost universally adopted in large steamers, and even small ones often carry them.

Digitized by Google

LECTURE XXVI.—QUESTIONS.

1. Sketch in section the piston of a steam cylinder for a land beam engine, showing the attachment of the piston-rod and the mode of packing the piston.

2. Describe, with a sketch, the construction of a piston-rod and piston, with metallic packing, suitable for a horizontal land engine, and show how the several parts are fitted together.

3. Sketch and describe some method of packing a high-pressure marine-engine piston so as to make it steam-tight. Describe also the gland and mode of packing for the piston-rod, stating the kind of packing which you would employ.

4. Sketch the piston for a large low-pressure cylinder marine engine, showing the metallic packing ring, and the manner in which the joint in this ring is made, as well as the contrivance for holding the same in its place. How was a piston formerly packed with hemp? What is the junk ring?

5. Sketch and describe Kirk's solid cone-shaped steel piston and corresponding piston-rod. Mention any advantages and disadvantages which this form of piston has in your opinion over the ordinary hollow form for large fast-speed engines.

6. Sketch the most common and serviceable form of crosshead and guide for a vertical marine engine. How are the rubbing surfaces kept oiled? Sketch the form of crosshead and guide employed in a horizontal marine or land engine. Indicate how the rubbing surfaces are lubricated.

7. Give complete free-hand sketches (side view and plan) of a marine engine connecting-rod, and explain how the various parts are machined and fitted together, as well as how the bearings are kept lubricated when the engine is working.

8. Describe, with sketch, some mode of constructing the end of a marine engine connecting-rod, pointing out the provisions made to allow for wear and to reduce friction.

9. Sketch the crank shaft end of the connecting-rod of a marine engine, and describe the means employed for lubricating the rubbing surfaces. Sketch and describe the crank shaft for a large marine engine. Why are large crank shafts made in different pieces, and how are these put together and fixed?

10. Sketch and describe, by an index of parts, a complete line of screw propeller shafting, with the stern tube and screw complete. Be particular in showing the position, fixing, and form of the various bearings, and explain how the thrust of the propeller is imparted to the ship.

11. In what way is the thrust of a propeller shaft communicated to the vessel? Explain your answer by sketches.

12. Sketch a section through the thrust block of a screw propeller, and state the materials employed for the different parts. Explain clearly the principle of construction and the difficulties to be overcome. (*Adv. S. and A. Exam.*, 1889.)

13. In a jet condenser the temperature of the injection water is 60° F., that of the water after condensation is 100° F., and the latent heat of the steam which enters the condenser is 1,016 thermal units, the temperature of the steam being then 140° F., find the number of pounds of injection water.

14. In a marine engine, working with a jet condenser, describe the method of testing the saltness of the water in the boiler, as well as the instrument

Digitized by Google

employed for this purpose. Determine also the amount of fuel lost by blowing out.

15. What is surface condensation? How is it carried out in marine engines?

16. Distinguish between a surface condenser and a jet condenser. Describe the method of carrying out each system of condensation, making any sketch you think necessary.

17. Describe a surface condenser, as applied to a marine engine. Indicate by arrows the directions taken by the steam and condensing water, and explain the whole of the parts and action by an index of parts.

18. Mention some of the advantages of a surface condenser as applied to marine engines, and draw in section a surface condenser, showing the mode in which water is caused to circulate through it. How are the tubes fitted so as to avoid leakage?

19. A surface condenser consists of 1000 brass tubes, each 6 feet long and $\frac{3}{4}$ inch outside diameter, what amount of cooling surface does this give? Supposing that such a surface condenser is to be fitted to an engine, what pumps, valves, &c., would be required, and how should you arrange them in order to put the apparatus in working order? *Ans.* 1,178 sq. ft.

20. A surface condenser has 1,725 tubes, each $6\frac{1}{2}$ feet long, and $\frac{3}{4}$ inch outside diameter, what amount of condensing surface do they give? Write down two numbers which express pretty nearly the relative conducting powers of copper and iron. How are the condenser tubes usually fitted and kept tight? *Ans.* 2,200 sq. ft. Roughly as 6 to 1, see p. 45.

21. In what way is the condenser of a marine engine freed from the air and water which would impede its action? How is the degree of exhaustion within the condenser ascertained?

22. Sketch a section through a single-acting vertical air pump, showing the construction of the bucket and also the position and construction of the valves.

23. The barrel of a single-acting air pump being vertical, sketch a section through it, showing the bucket or piston with metallic ring packings, and an india-rubber valve and guard, also show the gland and packing of the pump-rod. Sketch also the foot and delivery valves, and show their position and connection with the barrel of the pump.

24. Sketch a section through the air pump of an engine, showing the position of the valves. Describe an india-rubber disc valve or metallic valve as fitted to an air-pump bucket.

25. Make a sectional sketch of an air-pump chamber, with the bucket and valves as adapted for a double-acting pump in a marine engine. Why is the use of iron avoided in this part of the engine? What packing is usually employed?

26. Sketch a section through a double-acting circulating pump for marine engines, and describe its action by a complete index of parts.

27. Sketch and explain the general arrangement of a centrifugal circulating pump with fast-speed engine. What advantages has it over the ordinary single-acting or double-acting circulating pump?

28. An engine uses 10 lbs. of steam per minute, the feed temperature is 60° F., the boiler temperature 300° F., and that of the condenser 104° F. What is the theoretical maximum efficiency of the engine? State Regnault's formula for the total heat of steam at a given temperature, and deduce the quantity of heat which each pound of steam has received in the boiler. What H.P. would be developed if the engine worked as a perfect engine? [redacted] efficiency 25·8 per cent.; H.P. = 69.

Digitized by Google

LECTURE XXVII.

LAND BOILERS.

CONTENTS.—Waggon Boiler—Egg-Ended Boiler—Cornish Boiler—Lancashire Boiler—Breeches-Flued Boiler—Water Tube Boilers—Babcock & Wilcox Boiler—Vertical Boilers—Manholes.

IT is not our intention in this Lecture to enter into the early history of Steam Boilers so fully as we treated the early history of the Steam Engine, since the former were not made with any regard to known mechanical principles, but merely of the form most convenient to the manufacturer.

Among the earliest types of boilers of any note, the old *spherical* boiler, and the *haystack* boiler of Smeaton, occupied foremost positions. The latter kind was largely used prior to the time of Watt, and consisted of a series of flanged cast-iron rings, which were fixed together by means of bolts passing through the flanges. The top of the boiler was hemispherical, and also of cast-iron, and the boiler was fired from beneath. Many of the engines of the Newcomen type, which were fitted up by Smeaton, were supplied with boilers of this kind (see fig., p. 5).

Waggon Boiler.—The "*waggon*" boiler, so called from its resemblance in shape to a carrier's waggon, was introduced by Watt, and supplied by him along with most of his engines. It is illustrated in longitudinal and cross section in the following diagram taken from Prof. Rankine's book on *The Steam Engine*.

The top of this boiler was circular, and the sides and bottom concave, as shown by the cross section. The sides were sometimes made flat, but concave sides seem to have been more general. The fire-grate was situated underneath the boiler, and is shown at A. The flame and products of combustion passed from the fire-grate under the boiler to the end; here, they entered one of the lateral flues, N, and traversed along one side of the boiler, across the front end, and back along the other side to where they passed into the chimney. This arrangement of conveying the products of combustion round the boiler was known as the *wheel draught*, since the gases circulated from the back end right round the boiler. In the larger sizes of waggon boilers

Digitized by Google

made by Boulton & Watt, a flue was formed in the boiler itself. The heated products of combustion passed from the fire-grate underneath the boiler to the back end as before, but returned

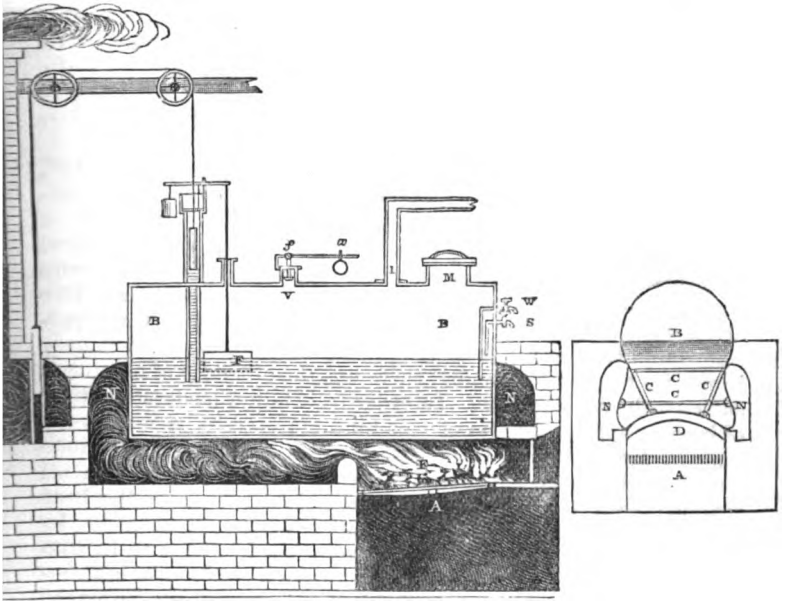

B	for Boiler.	M	for Man-hole.
A	,, Fire-grate.	V	,, Safety Valve.
N	,, Lateral flues.	F	,, Float.
S and W	,, Steam and Water cocks.	X	,, Chimney.

along this central flue to the front. Here the gases divided, and moved back to the chimney at the other end of the boiler through the lateral or side flues on both sides. This method of conducting the gases round the boiler was termed a *split draught*, since the gases divided at the front end of the boiler.

The column of water in the vertical feed pipe formed the pressure gauge, and the damper was controlled by the rise and fall of this column. The water level was regulated by a float arrangement shown at F. The float rose and fell with the water level in the boiler. In falling it opened a valve in the vertical feed pipe, which admitted water, whilst in rising it closed this valve. This arrangement is one which is only suitable for the very low pressures (from 5 to 10 lbs. per square

Digitized by Google

inch) at which these boilers were worked, since it is evident that with high-pressure steam the vertical pipe would become inconveniently high.

The waggon boiler was the style of boiler in most general use in this country for a long time, and it was not until about the year 1830 that it began to give place to forms more capable of resisting internal pressure. Its form rendered it suitable only for the very low pressures which Watt used, and even then it required to be stayed in the manner shown in the cross section in order to prevent deformation.

Egg-Ended Boiler.—When a higher pressure than about 15 lbs. per square inch became generally adopted, engineers were compelled to resort to cylindrical boilers. One of the first forms of cylindrical boilers tried was that known as the egg-ended boiler. This boiler was cylindrical with hemispherical ends. It was simple to construct, and required no staying whatever. The arrangements for firing and conducting the products of combustion round this form of boiler, were the same as those previously in use for waggon boilers, but there was the difficulty of obtaining sufficient heating surface. In order to obtain a moderate extent of heating surface, boilers of this kind required to be made very long in proportion to their diameter. It also had one serious defect, which was not found in the waggon boiler, viz., all sediment collected in the bottom of the boiler where the heat was greatest, and the plates were thus liable to get burned. In the waggon boiler the sediment collected in the two bottom corners, and these were not exposed to the most intense heat.

A modification of the egg-ended boiler, known as the "French" boiler (sometimes as the "elephant" boiler) was much used in France. A full description and illustration of this form will be found in Professor Rankine's treatise on *The Steam Engine*, page 471.

Cornish Boiler.—In order to increase the heating surface of egg-ended boilers, they were latterly constructed with a flue passing from end to end. The products of combustion from the fire-grate underneath the boiler, after moving to the back end, returned through the flue to the front end, and then passed back to the chimney along the lateral or side flues as in the improved waggon boiler. When, however, it was discovered that the radiation of heat from a boiler furnace amounted to 20 or 30 per cent. of the total heat of combustion, the furnaces were placed inside this flue, so as to impart to the water surrounding the flue, more of the heat radiated from the furnace. Boilers of this kind were introduced by Trevithick, and since they were first used to work the pumping engines at the Cornish mines, they

Digitized by Google

are known as *Cornish* boilers. The following diagram shows a longitudinal and a cross section through a Cornish boiler as now commonly constructed :—

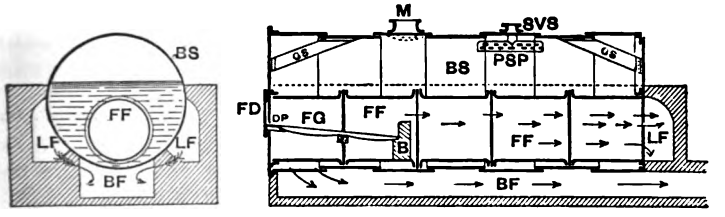

CORNISH BOILER.

B S	represents	the	Boiler shell.	**B F**	represents	the	Bottom flue to chimney.
F F	,,	,,	Furnace flue.				
F G	,,	,,	Fire-grate.	**G S**	,,	,,	Gusset Stays.
D P	,,	,,	Dead plate.	**M**	,,	,,	Manhole.
B	,,	,,	Bridge.	**S V S**	,,	,,	Safety valve seat.
F D	,,	,,	Fire door.				
L F	,,	,,	Lateral or side flues.	**P S P**	,,	,,	Perforated Steam Pipe.

The products of combustion pass from the fire-grate through the flue to the back end of the boiler, where they divide and return to the front end along the two lateral or side flues. At the front, the products of combustion pass down to the bottom flue, and re-uniting move off to the chimney in contact with the bottom of the boiler. By this arrangement the gases are reduced in temperature before coming in contact with the bottom of the boiler, where all sediment collects, and there is, therefore, no danger of burning the plates on the under side of the boiler. Sometimes the gases are discharged direct from the furnace flue into the lower flue; but, unless in the case of very long boilers, where the gases may be considerably cooled before leaving the furnace flue, or where the water is very pure, this plan is objectionable, since the underneath plates on which sediment accumulates are liable to get burned.

The flues in the boiler shown are welded at the longitudinal joints, and the several rings are joined together by Adamson's flanged joints. The front end plate is attached by an outside angle iron ring, and the back end plate by an inside angle iron ring, and these end plates are stayed to the shell by gusset plates. The furnace bars are made in two lengths, and are supported at mid-length by a cross bearer. At the front end these bars rest upon the dead plate, and at the back end they

Digitized by Google

are supported by the fire-brick bridge. When air is admitted to the furnace flue at the bridge, a cast-iron stool usually supports the furnace bars and the fire-brick, and a suitable sliding door is fitted to the stool, the opening of which for the admission of air is controlled from the furnace mouth. As a rule, however, the whole of the bridge is constructed of fire-brick. The external flues are built of ordinary bricks, but are always lined in the inside with fire-brick.

Lancashire Boiler.—The Cornish boiler is only suitable for small powers. When great power is required from any one boiler, that boiler if made of the Cornish type would require to have an excessively large furnace flue, in order to give sufficient grate surface. The length of the grate cannot be increased beyond that which can be conveniently worked by the fireman, and in practice it is usually from 5 to 7 feet. A flue of large diameter is weak to resist collapse, unless made of very thick plates, which is undesirable; hence, when large horse-power is required, the construction of the boiler is modified, and two flues of moderate size are fitted instead of one. This forms what has been termed the Lancashire boiler. In every other respect it is exactly the same as the Cornish boiler. The following diagram shows a Lancashire boiler complete, made by Messrs. A. Shanks & Sons, Arbroath :—

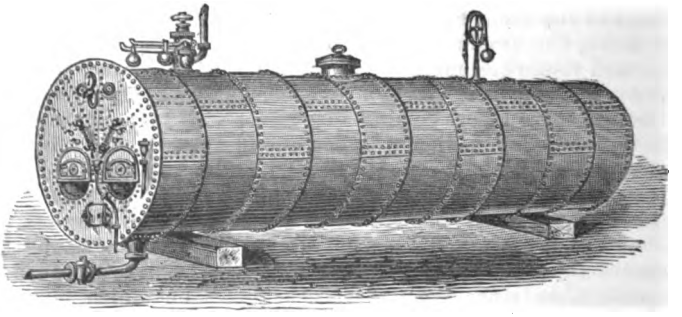

LANCASHIRE BOILER.

In the Lancashire boiler the furnaces are usually fired alternately, so that while the one is giving off smoke and unburnt hydrocarbon gases, the other is burning briskly, and with its greatest heating effect. By this arrangement, when the gases from the two furnaces mix in the external flues, the unburnt gases given off by the green fire (due to want of air and too low a temperature) are burnt by the excess of air which has

Digitized by Google

passed through the other furnace, being raised to the point of ignition by the great heat of the gases from the bright fire.

Water tubes.—In order to increase the effective heating surface and promote a better circulation of water, the flues of Cornish and Lancashire boilers are often fitted with water tubes. These water tubes are either parallel or tapered; the tapered tube, which is the better form, being known as the "Galloway" tube, from the name of the inventor. The annexed diagram shows the construction of these tubes and the method of fitting them into the flues. The hole in the upper side of the flue is sufficiently large to allow the flange of the small end of the tube to pass through, and the tubes are riveted to the flue in the manner shown. When parallel tubes are used, they are riveted to the flue with both flanges inside. These water tubes are very often welded into the flues, and this plan entirely prevents leakage at the joints, but if any tube fitted in this way requires to be replaced it must be cut out, and the welded part cut out with it, which leaves a very large hole in the flue.

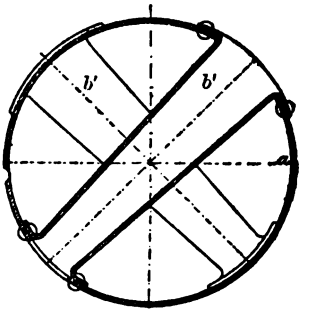

GALLOWAY TUBES.

Water tubes of this kind, besides increasing the heating surface and inducing circulation, increase the strength of the flues in a very material degree.

Breeches-flued Boiler.—A modification of the Lancashire boiler, which has been much used in this country within recent years, is the *breeches-flued* or *duplex furnace* boiler. The annexed folding-page shows a boiler of this kind as manufactured by Messrs. Penman & Co. of Glasgow.

As will be seen from the illustrations and "index to parts," this boiler has two furnaces the same as the Lancashire boiler, but the furnace tubes unite into one large cylindrical flue immediately behind the bridges. This large flue is fitted with tapered water tubes throughout its length, which permit of the water circulating freely through them, and one large tube is placed in the conical portion where the large flue is connected. The fittings and methods of staying the boiler are clearly shown, the end plates being supported by gusset stays and also by longitudinal stays. The front end plate is fitted to the shell with outside angle irons, and the back end plate with inside angle irons, according to the usual practice for Lancashire

Digitized by Google

boilers. The furnace flues are strengthened with Bowling hoops, except when Fox's corrugated furnace flues are fitted.

The arrangement of the furnace flues in this form of boiler ought to ensure more complete combustion than in the Lancashire arrangement, if the fires are worked alternately, since the unburnt gases from one fire mix with the hot products of combustion, and heated air (passed through in excess) from the other, before these have been cooled down by contact with the furnace flue. The large flue, also, besides presenting a very large and effective heating surface, makes an excellent combustion chamber, for the gases pass into it at a high temperature, and being broken up by striking against the water tubes, become thoroughly mixed together.

Another form of breeches-flued boiler is that known as the "Galloway" boiler. In this boiler the large flue between the bridges and the back end plate is nearly elliptical in section, and has its major axis horizontal. It is strengthened, and its heating surface increased by means of Galloway tubes, which are placed three abreast, and two abreast alternately throughout its length. A large flue of this shape, and placed in this manner, gives greater *effective* heating surface than the large cylindrical flue in the last boiler we have described, but, being weaker to resist collapse, it requires the water tubes to be placed at shorter intervals, and this increases the difficulty of cleaning out. The large elliptical flue is contracted in the direction of its major axis at the back end, so that the junction to the back end plate may not be close to the boiler shell, and the end plate may have more freedom to expand and contract.

Water Tube Boilers.—In water tube boilers, sometimes called *tubulous* boilers, as distinguished from *tubular* boilers (of which the marine boiler is an example), the flame and hot gases from the furnace act directly on rows of parallel tubes of small diameter, which contain water and steam. These tubes are connected to a receiver from which the supply of steam is drawn. Boilers of this class possess several advantages over the ordinary cylindrical boiler, but also their disadvantages.

Firstly in regard to the advantages:—

(1.) The heating surface is so large and effective, and the heat acts on such small quantities of water at any one place, that steam can be raised very rapidly. Also, the constant rising of steam from the internal surface of the tubes creates a powerful circulation throughout the boiler, and prevents to a large extent the deposition of sediment in the tubes.

(2.) The tubes being of small diameter (4 inches to 6 inches), may be made very thin and yet have a large factor of safety, so

Digitized by Google

that boilers of this form are well adapted for very high pressures. Should an explosion take place, it is seldom so disastrous as with ordinary cylindrical boilers, since the boiler is made up of so many separate parts, that if one of these parts gives way, the boiler is relieved, and little or no further damage is done.

(3.) The several parts being comparatively small and light, they are easily transported and fitted up in places where it would be difficult to send a whole cylindrical boiler.

(4.) Perhaps the most important advantage of this class of boiler is the facility with which repairs may be made. If any part of the boiler should fail or be damaged in any manner, it may be replaced with very little trouble and in a very short time; whereas, with a Cornish or Lancashire boiler, even a trifling repair often necessitates the stoppage of the boiler for several days.

Secondly in regard to the disadvantages:—

(1.) Although steam is raised more rapidly, it is also lowered more quickly, unless the boiler is of ample capacity for the work in hand. Consequently, greater and more constant attention on the part of the fireman is required with the water tube boiler than with the Breeches, Lancashire, or Cornish boilers.

(2.) The construction being more complicated, they are more expensive in first cost.

(3.) Although repairs can be effected more easily and with less loss of time than in the simpler forms of cylindrical boilers already described, they are liable to occur more frequently, unless the boilers are most carefully constructed and attended to.

As an illustration of a water tube boiler, we have selected that manufactured by the Babcock and Wilcox Co., of Glasgow.

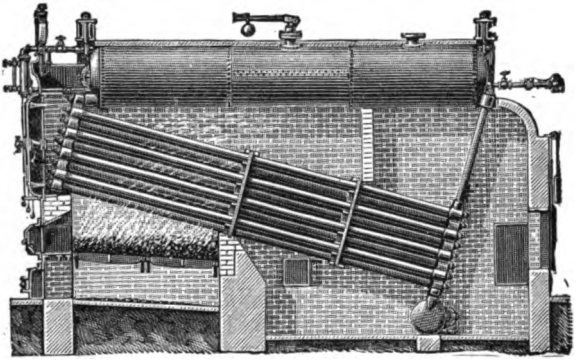

BABCOCK AND WILCOX WATER TUBE BOILER.

Digitized by Google

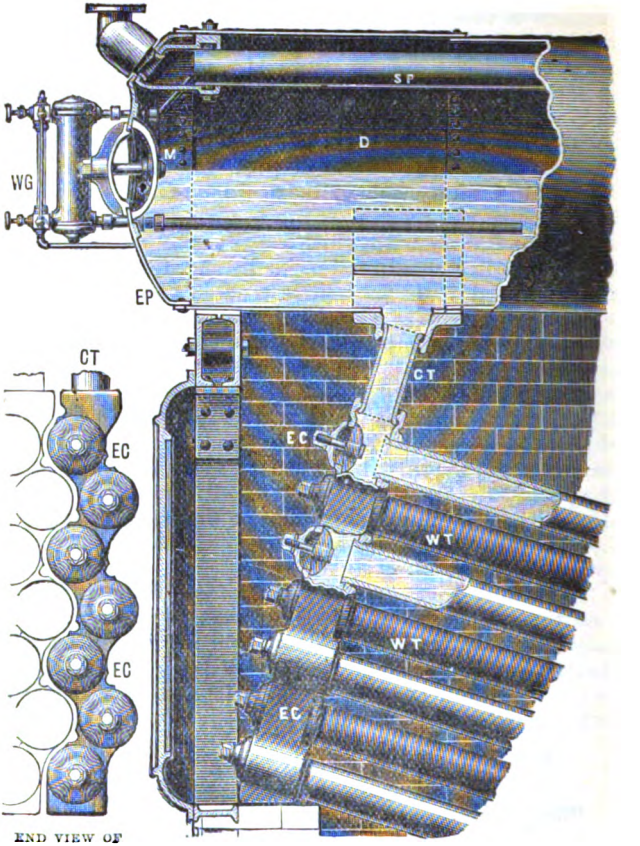

END VIEW OF HEADER. ENLARGED PARTIAL VERTICAL SECTION.

The boiler consists of several rows of water tubes, W T, placed in an inclined position as shown. Each upright row of these tubes is connected together by cast-iron end connections, E C, which are fitted to the water and steam drum, D, at both ends, by upright connecting tubes, C T. The water tubes, W T, are not arranged vertically above each other, but are placed zig-zag, so as to break up the flame and products of combustion. Two division plates consisting of iron faced on the front sides with fire bricks fit between the tubes (see fig., p. 305), in order to guide the flame and hot gases which rise from the fire-grate between the

Digitized by Google

upper ends of, W T, and being deflected downwards by the first fire-brick division, rise again behind the second, and finally pass across between the lower upright connecting tubes, and down again to the chimney tunnel thus ⌒. The water and connecting tubes (W T and C T), are 4 inches diameter, made of wrought-iron and lap-welded. The steam and water drum, D, is made of iron or steel plates, the longitudinal plates being double riveted, and the circumferential joints single riveted, while the end plates, E P, are of steel and are dished out to the required curvature. Steam is taken from this drum, D, by the horizontal internal steam pipe, S P, perforated with small holes on the under side to prevent priming. A manhole, M, a glass water gauge, W G, and a steam pressure gauge are fitted to the front end of the steam drum, while a safety valve is fixed on the top centre. Underneath the lower end of the water tubes, W T, there is a mud drum into which all sediment collects. The mud drum is a cast-iron cylinder with branches cast on the upper side to receive its end connections. It is fitted with sludge doors, and blow-out apparatus, by which it may be thoroughly cleaned out. The sediment should be blown out every twenty-four hours.

Vertical Boilers.—Vertical boilers are very useful for small powers, but are never employed for supplying steam to large engines. They occupy much less space than Lancashire or Cornish boilers, but are not nearly so economical. They are chiefly used for auxiliary purposes in steamers, or for use on temporary constructions such as cranes, or in portable machines. The annexed diagram illustrates an ordinary cross tube vertical boiler as manufactured by Messrs. Shanks & Son, of Arbroath.

It is fitted with an internal fire-box, which has a fire-grate at the bottom. The top of the fire-box is arched to resist collapse, and is also bound to the crown of the boiler by the uptake, which is a circular tube flanged at the bottom, and fitted to the boiler crown by an angle-iron ring. The bottom of the fire-box is fixed to the shell by rivets passing through a deep iron ring which fits into the annular space between the fire-box and the shell. Sometimes this joint is made by flanging or rolling out the bottom of the fire-box to the internal diameter of the shell, and uniting the two with rivets. The water tubes shown are Galloway tubes, but parallel tubes are frequently fitted into vertical boilers. When such tubes are used, they should be fitted in with a slight inclination to the horizontal in order to improve the circulation and facilitate the escape of steam. The various necessary fittings such as manholes and handholes for

Digitized by Google

facilitating inspection and cleaning, as well as a safety valve, water and steam gauges, try cock, blow-off cock, and feed water check valve are shown in position.

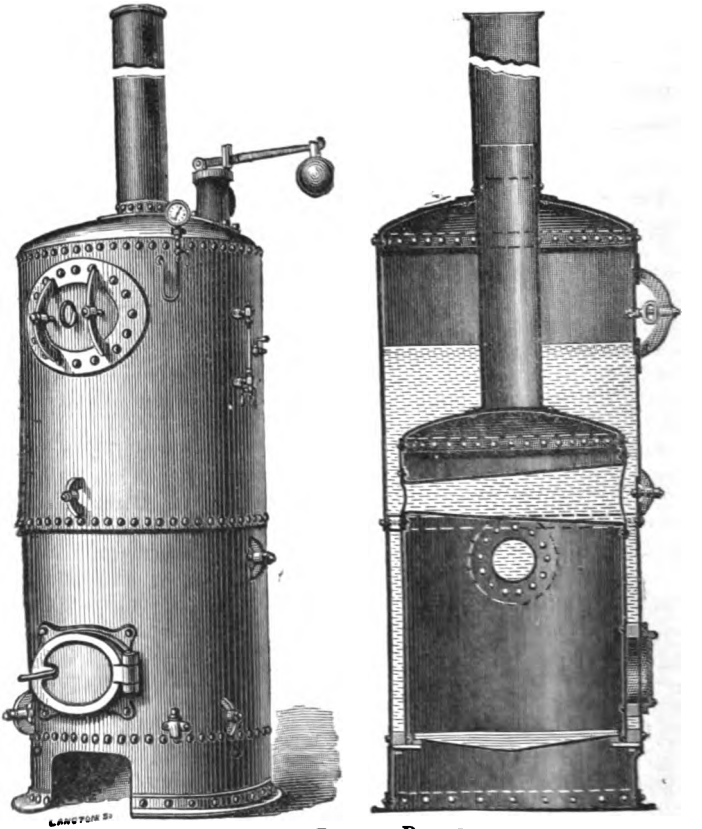

VERTICAL DONKEY BOILER.

The above is the simplest form of vertical boiler, and the one in most general use, but there are many other plans for the arrangement of the internal parts which aim at giving increased efficiency to boilers of the vertical type. A very simple and efficient method of constructing the interior of a vertical boiler is that adopted by Messrs. Cochrane, of Birkenhead, which we illustrate on p. 310.

Digitized by Google

SIZES OF SHANKS' VERTICAL BOILERS.

For 60 lbs. Steam Pressure.

Horse-Power.	2 H.P.	4 H.P.	6 H.P.	8 H.P.	10 H.P.	12 H.P.
Height of Boiler, . .	5 ft. 0 in.	6 ft. 6 in.	7 ft. 6 in.	8 ft. 6 in.	9 ft. 6 in.	11 ft. 6 in.
Diameter of Boiler, .	2 „ 4 „	2 „ 9 „	3 „ 3 „	3 „ 9 „	4 „ 0 „	4 „ 3 „
Thickness of Shell Plates	B. $\frac{5}{16}$ „	B. $\frac{5}{16}$ „	B. $\frac{5}{16}$ „	B. $\frac{6}{16}$ „	B. $\frac{6}{16}$ „	B. $\frac{6}{16}$ „
Height of Fire-Box, .	2 ft. 6 in.	3 ft. 2 in.	3 ft. 10 in	4 ft. 8 in.	5 ft. 3 in.	6 ft. 0 in.
Diameter of Fire-Box, .	2 „ 0 „	2 „ 5 „	2 „ 11 „	3 „ 5 „	3 „ 8 „	3 „ 11 „
Thickness „ Plates,	BB. $\frac{5}{16}$ „	BB. $\frac{5}{16}$ „	BB. $\frac{6}{16}$ „	BB. $\frac{6}{16}$ „	BB. $\frac{6}{16}$ „	BB. $\frac{6}{16}$ „
Number of Cross Tubes,	1	2	2	3	3	4
Diameter of Cross Tubes,	8 in.	8 in.	9 in.	9 in.	11 in.	11 in.
Thickness „ Plates,	$\frac{5}{16}$ „	$\frac{5}{16}$ „	$\frac{5}{16}$ „	$\frac{5}{16}$ „	$\frac{5}{16}$ „	$\frac{5}{16}$ „
Length of Chimney, .	3 ft. 6 in.	4 ft. 0 in.	4 ft. 0 in.	6 ft. 0 in.	8 ft. 0 in.	9 ft. 0 in.
Diameter of Uptake, .	8 in.	9 in.	9 in.	9 in.	11 in.	11 in.
Thickness „ Plates,	$\frac{5}{16}$ „	$\frac{5}{16}$ „	$\frac{5}{16}$ „	$\frac{5}{16}$ „	$\frac{5}{16}$ „	$\frac{5}{16}$ „
Weight of Boiler. . .	11 cwts.	17 cwts.	24 cwts.	31 cwts.	38 cwts.	45 cwts.

Cochrane's boiler is similar in the disposition of its heating surface to an ordinary marine boiler. The flame and products of combustion are led up one side of the boiler into the combustion chamber, then through the horizontal tubes across the boiler into the uptake. This arrangement gives large heating surface, as well as large steam space. The tubes are easy of access, and the boiler may therefore be easily and thoroughly cleaned. The hemispherical crowns on the boiler shell and on the fire-box render staying of these parts unnecessary, and the flat tube plates are bound together by the tubes themselves.

Another form of vertical boiler is that shown in the diagram on p. 311 * (combined with a small vertical steam engine), which has been designed and patented by Messrs. Shanks of Arbroath.

The distinctive features of this boiler are the construction of the furnace crown and the return tubes. As will be seen from the figure, the fire-box, which is tapered throughout, is largely increased in diameter at the top; it is then arched over, and the

* A plan of this form of boiler is shown at the end of the next Lecture.

Digitized by Google

centre dished down to the hollow pot-like shape shown, the hollow dished portion being formed of a separate plate. Return tubes are fitted between the upper part of the fire-box and the bottom of the water space. The annular space underneath this,

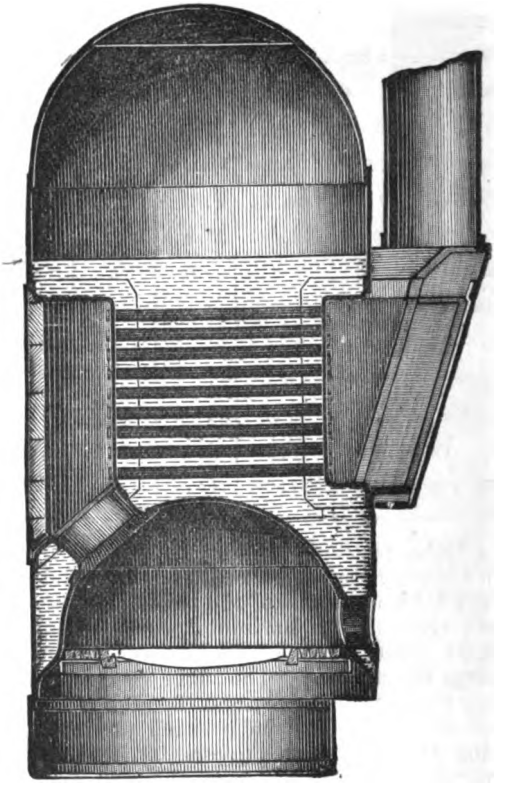

COCHRANE'S VERTICAL BOILER.

between the bottom of the fire-box and the outer shell, serves as a flue, and leads the products of combustion round to the uptake or chimney, which is situated at one side of the boiler. The flame and hot gases from the fire-grate rise to the top of the fire-box, and then entering the tubes, proceed downwards into the annular flue at the bottom, from which they ascend the upt-

Digitized by Google

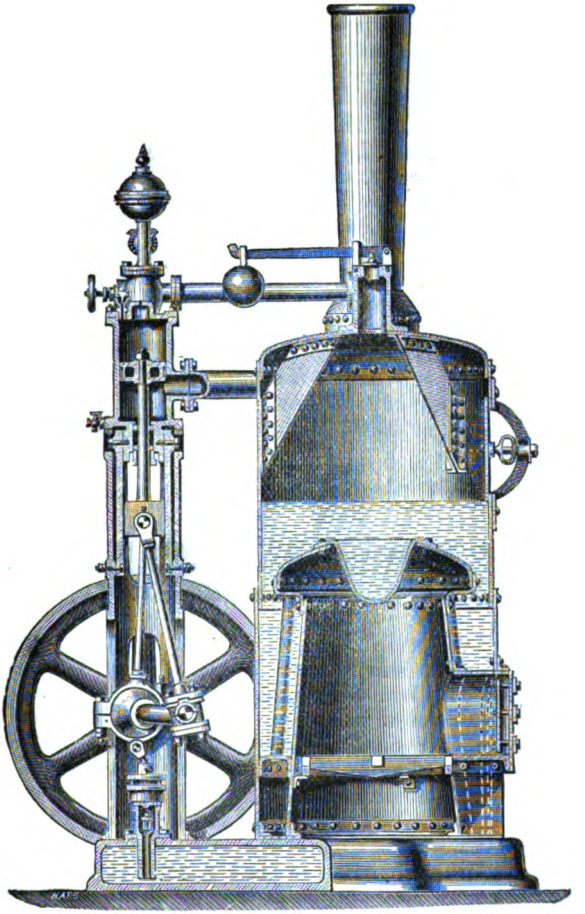

SHANKS' RETURN TUBE VERTICAL BOILER AND VERTICAL ENGINE.

and chimney. The section of the engine and the boiler mountings will be readily understood by the student from the figure, without explanation at this stage of our Lectures.

Manholes.—Manholes are usually of an elliptical form, and about 16 in. by 12 in., and in large boilers there is generally a smaller one, about 14 in. by 11 in., through which a boy can pass, besides the larger one. It is apparent that the cutting out of

Digitized by Google

such a large hole as this in a boiler plate, reduces to a very great extent the strength of that plate, and yet, until lately, this does not seem to have been recognised, since no means were adopted to compensate for this loss of strength. Wherever such a large hole as this is cut out of the boiler plates, the edge of the plate should be strengthened by riveting securely a broad wrought-iron ring round the edge, or by some other efficient plan. The manhole covers also were formerly of a bad form, being simple flat plates rolled to the curvature of the boiler. They were fitted to the inside of the shell, and held up by bridge bars, bolts, and nuts. Owing to their curved form, it was very difficult to get a good fitting joint, and the bridge bolts, therefore, required to be screwed up very tightly, which, assisted by the steam pressure inside, was liable to cause bulging of the cover, and start a rent in the edge of the manhole.

A very good method of strengthening the manhole and of forming the cover, is shown in the following figure :—

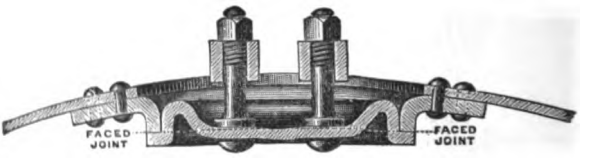

BOILER MANHOLE.

This arrangement was devised by Mr. Charles M'Neil, junr., of Kinning Park Iron Works, Glasgow, and is a very strong, yet very simple form of manhole. The edge of the manhole is generally strengthened by a broad-flanged ring of Siemens' steel as shown, and this ring has a flat-faced joint on its under side. The cover, which is made of the form shown for the sake of strength, is also flat, and is faced so as to facilitate the making of a tight joint with the ring.

The form of manhole cover in most general use at the present time for horizontal land boilers, is that in which there is a short cast-iron or wrought-iron flanged neck fitted above the hole in the boiler plate, sometimes with the addition of the usual strengthening ring round the hole inside the boiler. This neck is made flat on the top, and is fitted with a flat or slightly curved cast-iron cover, which is secured by bolts and nuts passing through the flanges. This method is very efficient, since it gives ample strength, and the joint of the cover gives no trouble. (See figs., pp. 301, 302, and folding-page in this Lecture.)

Digitized by Google

Lecture XXVII.—Questions.

1. Sketch a section through a single tube or Cornish boiler, with a fire-grate inside the tube. Also describe, with a sketch, a safety valve, as applied to such a boiler.

2. Describe, with sketches, the construction of a Lancashire double-flued boiler. Show the position of the necessary fittings.

3. Sketch a section of a cylindrical land boiler, with two internal furnace tubes. Describe the mode of constructing the tubes so as to allow for expansion or contraction, and to prevent collapse. Show the manner in which the shell is strengthened by gusset stays.

4. Describe, with a sketch, an ordinary cylindrical land boiler with flat ends and internal flues. Enumerate the principal fittings and their uses.

5. Sketch the front view of a Lancashire boiler, showing all the necessary fittings. State the uses of the principal parts in giving an index of them. Also describe any apparatus for indicating the height of the water in land boilers with sketch and reference table.

6. Sketch and describe any form of breeches-flued boiler, and point out briefly its distinctive features. In what respect does this boiler possess an advantage over the Lancashire boiler?

7. Sketch and describe, with index of parts, any form of water tube boiler with which you are acquainted, and state what advantages this form of boiler has over ordinary cylindrical boilers. State also its disadvantages.

8. Describe fully by sketches a vertical cross tube boiler, and describe the several workshop processes by which such a boiler is constructed.

9. Describe the form of water tubes usually fitted to cylindrical land boilers, and show how they are fitted in.

10. Sketch and describe the best form of manhole for a boiler with which you are acquainted.

11. Sketch and describe two methods by which the internal tubes of a Lancashire boiler are strengthened against collapse. Name the advantages claimed for the plans you select. (*Adv. S. and A. Exam.*, 1888.)

Digitized by Google

LECTURE XXVIII.

MARINE BOILERS.

CONTENTS.—Rectangular, Oval, and Cylindrical Boilers—Single-ended and double-ended Boilers—Boilers of S.S. *St. Rognvald* with specification—High-pressure Boilers of S.S. *Arabian*—Double-ended Boilers of S.S. *Wingsang*. Shanks' Small Vertical Marine Boiler for Steam Tugs, &c.

Rectangular Boilers.—The old marine boilers were all made rectangular; and they continued to be made of that form so long as steam pressures below 35 or 40 lbs. per square inch were in use for marine engines. In modern practice, however, owing to the use of steam at a pressure greatly exceeding the above, boilers of this form are no longer manufactured, and few of them are in use except amongst the war-ships of the Royal Navy. As compared with the modern cylindrical boilers, working at the same pressure, they occupied less space in the ship for a given power, but they were heavier, owing to their form and the enormous number of vertical and horizontal stays required to support the flat sides; and being more difficult to construct they were therefore more expensive. They had, however, owing to the rectangular form, more steam space for the same amount of grate and heating surface. Rectangular boilers were constructed with any required number of furnaces, usually 3 or 4 for large powers, and the furnaces were arched on the top and bottom, and had flat sides. Boilers of this form were classified into *dry bottom* and *wet bottom* boilers. In dry bottom boilers, there was no water space underneath the furnace flues; there was in fact no bottom to them, simply recesses formed in the bottom of the boiler: whereas, in wet bottom boilers, the furnace flues were formed entirely inside the boiler, with a water space underneath. Rectangular boilers were as a rule tubular boilers, and the arrangement and position of the tubes were, except in a few special forms, similar to those in the modern cylindrical marine boiler—*i.e.*, the flame and products of combustion passed from the furnace flue into a combustion chamber at the back of the boiler, and returned through a series of tubes situated above the furnace flues into the smoke-box, and thence passed up the uptake to the chimney.

Oval Boilers.—To economise space and obtain some of the advantages of the old rectangular boiler, marine boilers are some-

Digitized by Google

times made with flat sides and semi-circular at the top and bottom, and are known as *oval* boilers. The flat sides require to be bound together by transverse stays, which are made to pass between the rows of tubes. These boilers are simple to construct and work economically, and the thickness of the shell plates is less than would be required for a cylindrical boiler of same power and capacity, since the thickness is determined by the diameter of the semi-circular part at the top and bottom.

Cylindrical Boilers.—Modern steam boilers which have to resist very high pressures have their shells made cylindrical, since that is the only form for which staying is not necessary, and the flues are also made of this form. Cylindrical marine boilers are made either single- or double-ended—*i.e.*, the boiler is fired from one end or from both ends. The former contain from two to four furnaces, and the combustion chambers are variously arranged.

(1.) *In single-ended boilers*, when there are two furnaces there may be one combustion chamber common to both, or a separate combustion chamber for each furnace. The latter is the better arrangement, since, if any slight fault such as the leaking of a tube occurs in one combustion chamber, it may be repaired without the necessity of drawing both fires and blowing off steam.

When the boiler has three furnaces, there are almost invariably three separate combustion chambers, since, no other equal division can be arrived at.

If there are four furnaces in the boiler there are usually either two or three separate combustion chambers. When two combustion chambers are fitted, each pair of side furnaces communicates with the same combustion chamber; and if three combustion chambers are fitted, the two central furnaces have a common combustion chamber, and the side furnaces have separate combustion chambers.

(2.) *In double-ended boilers*, the combustion chambers are arranged independently of the number of furnaces.

A very common and efficient plan is to have opposite furnaces connected to the same combustion chamber. Another arrangement gives one common combustion chamber for each end set of furnaces; while in the third, which is the heaviest and most expensive method of all, each furnace has a separate combustion chamber.

The arrangements of combustion chambers given above, are those usually met with in actual practice, although other plans may sometimes be adopted.

Boilers of S.S. "St. Rognvald."—The following illustrations

Digitized by Google

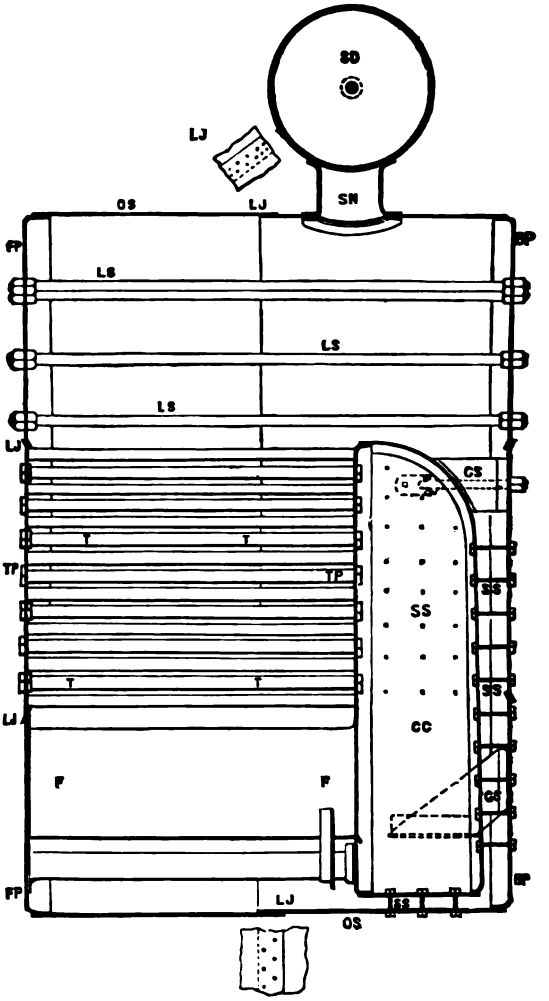

LONGITUDINAL SECTION—SCALE ½ INCH=1 FOOT.

O S	for Outside Shell.	T P	for Tube Plates (front and back),
F	,, Furnaces.	B P	,, Back-end Plate.
C C	,, Combustion Chambers.	L J	,, Lap Joint, in circumferential seam
T	,, Tubes.		
F P	,, Front-end Plate.		

Digitized by Google

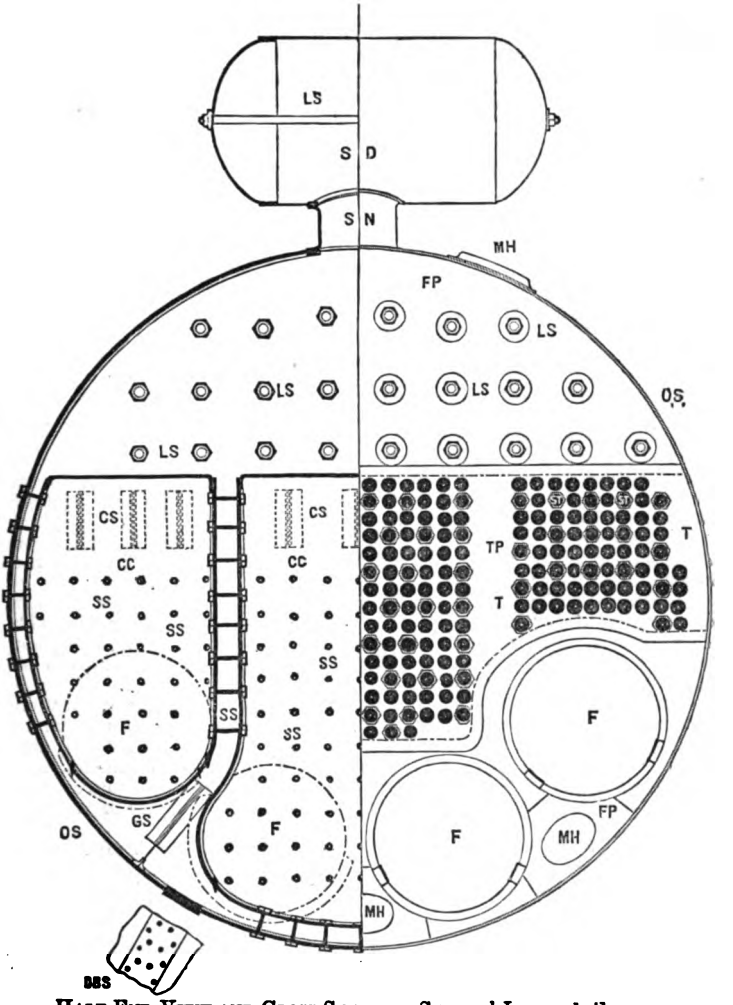

HALF-END VIEW AND CROSS SECTION—SCALE ¼ INCH = 1 FOOT.

DBS for { Double-riveted Butt Straps, with double straps for longitudinal seams.
S D ,, Steam Dome.
,, ,, Neck.

M H for Manhole and Mudhole Openings.
L S ,, Longitudinal Stays.
S T ,, Stay Tubes.
G S ,, Gusset Stays.
C S ,, Crown Stays.
S S ,, Screwed Stays.

Digitized by Google

represent the boilers of the S.S. *St. Rognvald*, constructed by Messrs. Hall, Russell & Co., of Aberdeen.

The engines of this steamer were illustrated, and a specification given in Lecture XXIII.; we now append a complete specification of the boilers.

SPECIFICATION OF MAIN BOILERS S.S. "ST. ROGNVALD."

General.—To be two in number, cylindrical, multitubular, and fired from one end with four furnaces in each. To be made of mild steel (Siemens' process), with the exception of the tubes.

Shells.—Each boiler to be 15 feet extreme diameter, and 10 feet 5 inches long. The plates to be $\frac{7}{8}$ inch thick, in two lengths fore and aft. The circumferential seams to be lap-jointed and double-riveted with rivets $1\frac{1}{4}$ inches diameter, and $5\frac{1}{4}$ inches pitch; the longitudinal seams to be made with double butt-straps $12\frac{1}{4}$ inches broad, $\frac{3}{4}$ inch thick, and double-riveted with rivets $1\frac{1}{8}$ inches diameter and 5 inches pitch.

The end plates to be $\frac{13}{16}$ inch thick, flanged all round, and double-riveted to shell. The whole of the rivet holes to be drilled 1 inch diameter before the plates are bent, and after they are bent they are to be fitted together and the holes drilled out in place to fit the rivets.

The edges of plates to be planed all round, and the seams of shell to be carefully caulked inside and outside. A baffle plate to be fitted to the fronts of each boiler *above* tubes.

Furnaces.—To be four in number for each boiler, 3 feet 4 inches outside diameter, and 7 feet long, plates to be $\frac{9}{16}$ inch thick, and the top plate to be in one piece and jointed to the bottom plate by double butt-straps $\frac{5}{8}$ inch thick and single riveted. The whole of edges of the plates and butt-straps to be planed and caulked outside and inside.

Combustion Chambers.—The two centre furnaces to have one combustion chamber common to both. The two side furnaces to have each a separate combustion chamber. The back and side plates to be $\frac{1}{2}$ inch thick, and stayed with screwed stays $1\frac{1}{4}$ inches diameter at bottom of thread, and pitched $8\frac{3}{4}$ inches apart; made of mild steel, and fitted with nuts at both ends. The tops of these chambers to be curved to the arc of a circle of 26 inches radius.

Tubes.—To be of iron, lap-welded, 249 in number (in each boiler), and $3\frac{1}{4}$ inches external diameter, and No. 9 B.W.G. in thickness, swelled at front end to $3\frac{3}{8}$ inches diameter. The stay tubes to be 75 in number (in each boiler) $3\frac{1}{4}$ inches external diameter, and $\frac{9}{16}$ inch thick. These tubes to be screwed into back tube plate, and fitted with nuts on combustion chamber side, and to be secured into the front tube plate with nuts on each side.

Stays.—The longitudinal stays in steam space to be $2\frac{1}{4}$ inches diameter at bottom of thread, made of mild steel and pitched 16 inches apart. Washers $7\frac{1}{2}$ inches diameter, $\frac{1}{2}$ inch thick, to be fitted to each of the stays at both ends of boiler (outside). The end plates of the boiler to be tapped, and stays screwed in, to a good fit, and afterwards caulked. The whole of the staying to be sufficient for a working pressure of 90 lbs. per square inch.

Steam Domes.—One on each boiler 3 ft. 6 inches diameter, and 7 ft. long, with plates $\frac{1}{2}$ inch thick. The longitudinal seams to be lap-jointed and double riveted; the circumferential seams to be lap-jointed and single riveted.

Digitized by Google

The end plates to be $\frac{7}{8}$ inches thick, and dished to a circle 24 inches radius, and fitted with one steel stay in the centre, $2\frac{3}{4}$ inches diameter at bottom of thread. The domes to be connected to the boilers by strong neck pieces 16 inches diameter inside, and 12 inches long, and double riveted to shells of dome and boiler.

Manholes.—To be cut in the shells of the boilers where required, and to be fitted with wrought-iron doors, studs, bridges, &c., and compensating rings of flat plate, or angle-iron fitted round them, and double riveted to shell.

Testing.—The complete boilers and steam domes to be tested with water pressure to 180 lbs. per square inch, before leaving the works, without any leakage or signs of weakness.

Boiler Fixings.—The boilers to rest on very strong wrought-iron seats riveted to the ship's floors, with double angle irons on the floors. The seats to be well stayed in a fore and aft direction. The upper part of boilers to be securely fastened to the ship's beams, in such a way as to allow for the boiler expanding without opposition from the stays.

Lagging.—After the boilers have been fixed in the vessel and tested to 90 lbs. steam pressure, their upper parts and the steam domes are to be covered with an approved non-conducting composition, to extend round as far as the centre of the wing furnaces, and then to be sheathed with sheet lead or galvanised iron, bound with strong iron hoops.

Boiler Mountings.—Each boiler to have two spring loaded safety valves $4\frac{1}{2}$ inches diameter, with easing gear led to engine-room platform, one steam stop valve 7 inches diameter, one valve for steam to winches and cranes $2\frac{1}{2}$ inches diameter, one valve for steam to whistle, one surface blow-off valve, one bottom blow-off valve, one main feed check valve, one donkey feed check valve, one salinometer cock, two sets of asbestos packed gauge cocks; also an efficient means of circulating the water in boilers while steam is being got up. The whole of the above valve chests to be of cast-brass, with the exception of the safety valve and stop-valve chests.

Furnace Mountings.—The furnace fronts, doors, and centre bar-bearer, to be made of wrought-iron, and the dead plates and bars of cast-iron. Furnace fronts below dead plate to be fitted with damper doors, with a rack to keep them open to the desired amount. A wrought-iron door to be fitted to lower part of bridge bearer in each furnace, so that ashes or coal thrown over the bridges may be removed.

Uptake and Funnel.—The uptake to be formed of $\frac{1}{4}$ inch and $\frac{3}{16}$ inch wrought-iron plates, with an air space of 2 inches between them. The smoke-box doors to have shield plates both outside and inside, and very strong hinges with brass pins riveted in. The funnel to be formed of $\frac{1}{4}$ inch and $\frac{3}{16}$ inch plates, 43 feet high from firebars, and 6 feet 6 inches diameter, with all necessary hoops and shackles for stays, &c.

Boilers of S.S. "Arabian."—As an illustration of boilers which work at a very high pressure, we have selected that shown in the following diagrams, which is the boiler of the S.S. *Arabian* (the engines of which were described in Lecture XXIV.), and was constructed by Messrs. Rankin & Blackmore, Greenock. The engines are of the triple-expansion type, and the boiler pressure is 150 lbs. per square inch.

This boiler is single ended, and is 10 feet 6 inches diameter, and 9 feet $5\frac{1}{2}$ inches long. It has two furnaces, 3 feet diameter (minimum) constructed of Fox's corrugated steel plate $\frac{1}{2}$ inch

Digitized by Google

thick, and each furnace has a separate combustion chamber. The shell plates are of steel 1 inch thick, and the shell is constructed in three rings, which are united together circumferentially by double-riveted lap joints. These rings are jointed

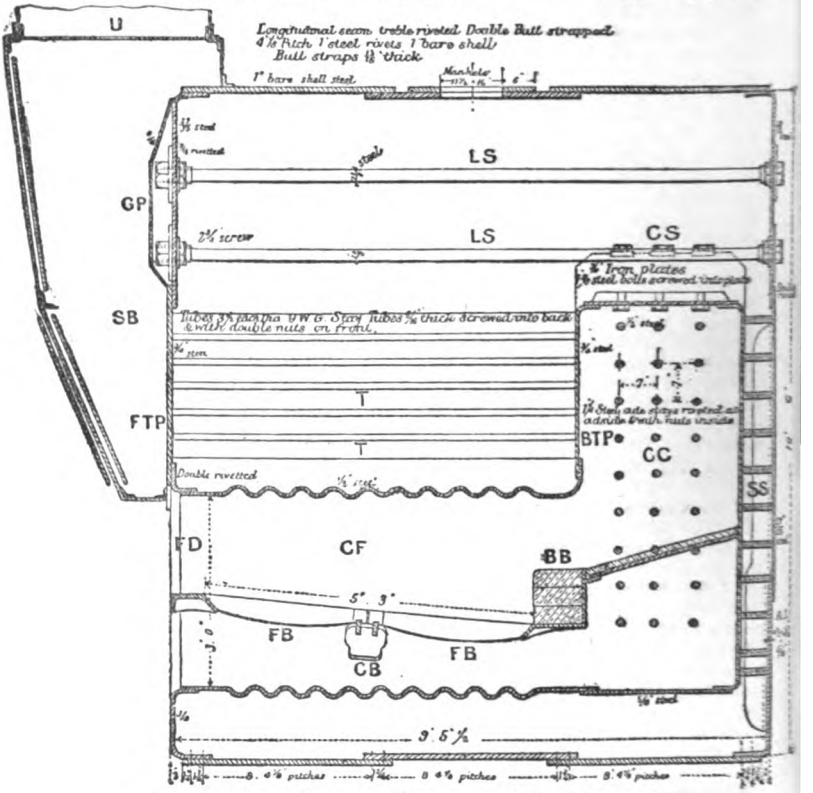

LONGITUDINAL SECTION—BOILER OF S.S. "ARABIAN."

longitudinally by treble-riveted butt joints, provided with double straps or cover plates, $\frac{13}{16}$ inch thick. The rivets used are of steel, 1 inch diameter, and, in the case of the longitudinal joints, they are placed at $4\frac{1}{8}$ inches pitch. The end plates are made in three pieces, and are fixed together by double-riveted lap joints, and flanged to meet the shell and the corrugated furnace flues. The furnace flues are flanged at the back ends, and riveted to the combustion chambers. The combustion

Digitized by Google

chambers are flat on the top, and deformation is prevented by girder-plate crown stays, C S, fitted with three $1\frac{3}{8}$ inch steel bolts for each stay. The screwed stays, S S, at the backs of the

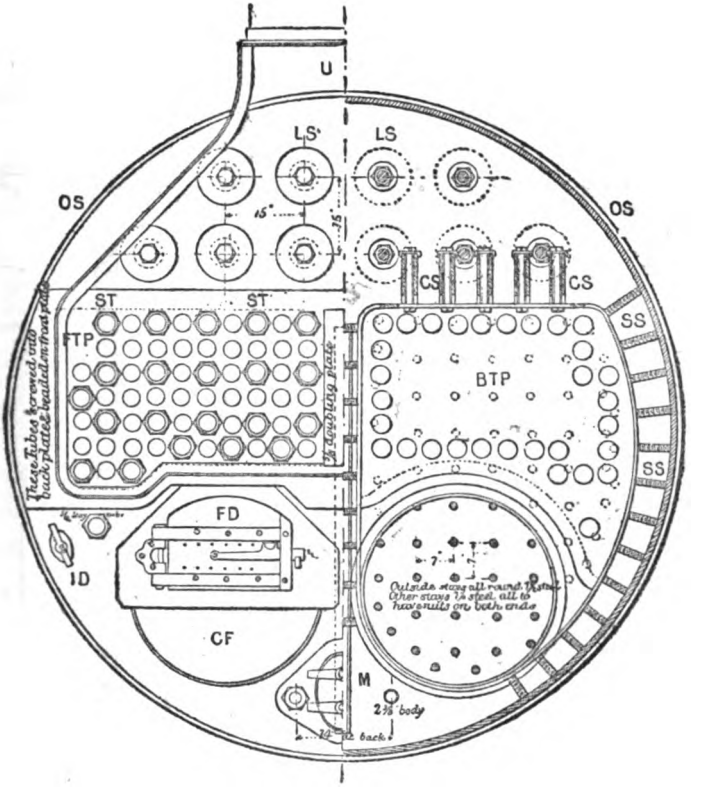

BOILER OF S.S. "ARABIAN."

OS	for Outside Shell.	BB	for Fire Brick Bridge.
CF	,, Corrugated Furnace Flues.	M	,, Manhole.
CC	,, Combustion Chambers.	ID	,, Inspection Door.
T	,, Tubes.	LS	,, Longitudinal Stays.
ST	,, Stay Tubes.	CS	,, Crown Stays.
FTP	,, Front Tube Plate.	SS	,, Screwed Stays.
BTP	,, Back Tube Plate.	SB	,, Smoke-Box.
FD	,, Furnace Door.	GP	,, Guard Plates for L S nuts.
FB	,, Furnace Bars.	U	,, Uptake to Funnel.
CB	,, Cross Bearer for furnace bars.		

Digitized by Google

combustion chambers, are of steel $1\frac{1}{4}$ inch diameter, with the exception of those forming the outside row, which are $1\frac{1}{2}$ inch diameter. All these stays have nuts on both ends. The flat sides of the combustion chambers are stayed by $1\frac{1}{4}$ inch steel

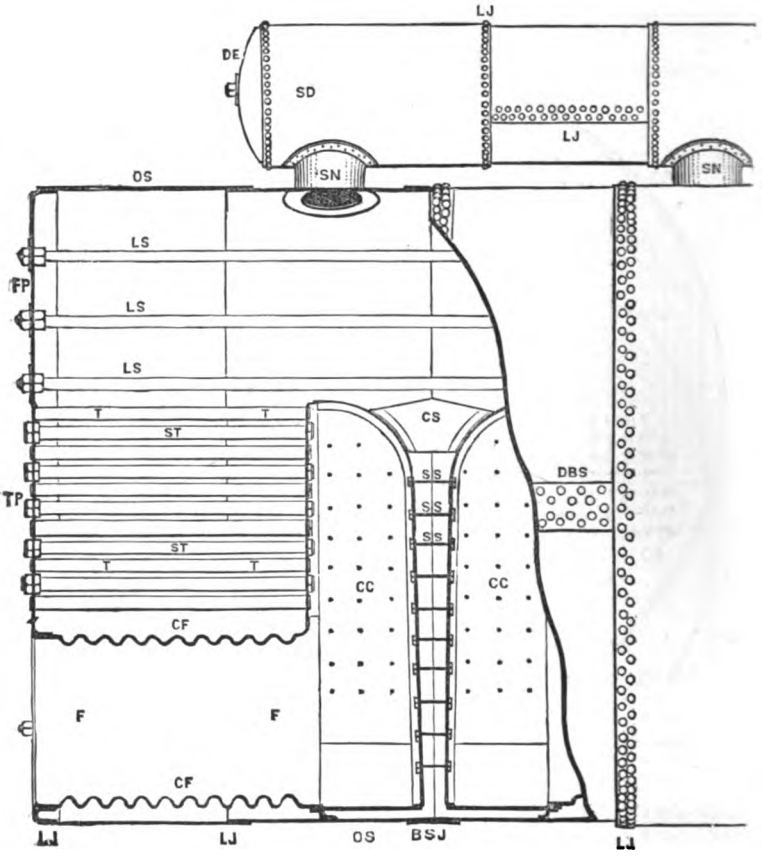

BOILER OF S.S. "WINGSANG"—Scale $\frac{1}{4}$ inch = 1 foot.

DBS for Double Butt Strap Joints.
LS ,, Longitudinal Stays.
CS ,, Crown Stays.
SS ,, Screwed Stays.
SD ,, Steam Dome.

DE for Dome End-plates.
SN ,, Steam Neck.
MH ,, Manhole, and Mudhole Openings.

Digitized by Google

stays with nuts on the inner ends only, the outside ends being riveted over. The boiler contains 122 tubes, T, 3½ inches diameter, of which number 40 are stay tubes, S T, whilst six others are screwed into the back tube plate, B T P, and beaded over on the front ends. The stay tubes, S T, are screwed into

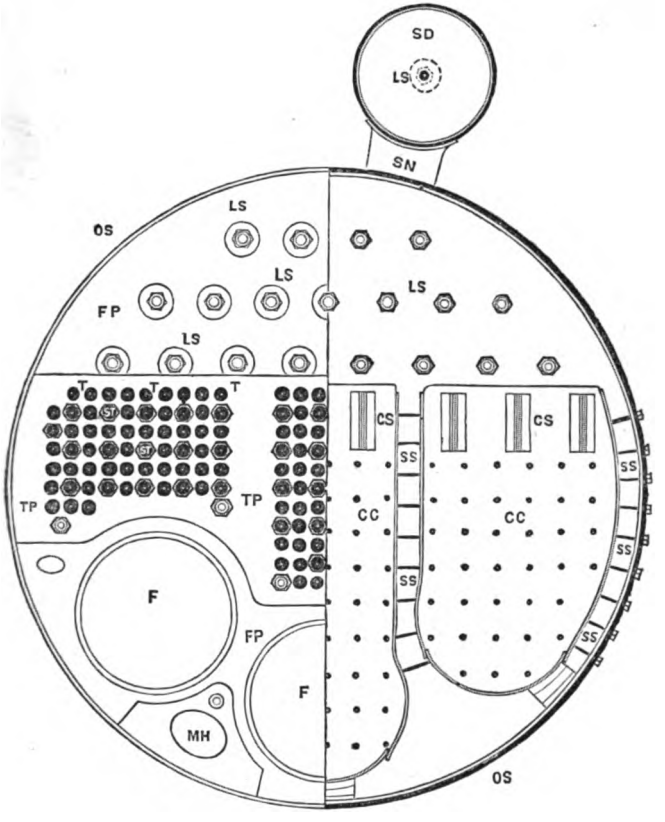

BOILER OF S.S. "WINGSANG"—Scale ¼ inch = 1 foot.

O S	for	Outside Shell.	S T	for	Stay Tubes.
F	,,	Furnaces.	F P	,,	Front-end Plate.
C F	,,	Corrugated-furnace Flues.	T P	,,	Tube Plate.
C C	,,	Combustion Chambers.	L J	,,	Circumferential Lap Joints.
T	,,	Tubes.	B S J	,,	Butt Strap Joints.

Digitized by Google

the back tube plate, B T P, and have double nuts on the front ends. The stay tubes are $\frac{5}{16}$ inch thick, and the ordinary tubes, No. 9, W.G. thick, or ·148 inch. The upper part of the boiler, and also the lower part below the furnaces, are stayed by steel longitudinal stays, L S, $2\frac{3}{8}$ inches in diameter at the body, with $2\frac{3}{4}$ inches screws. A stay tube running through to the front plate below the smoke-box, is also provided on each side of the boiler as shown in the end elevation, to support that part of the combustion chamber into which it enters. The manhole on the top of the boiler is fitted with a ring, 6 inches broad and 1 inch thick, to compensate for the loss of strength of the plate in which the hole is cut.

S.S. "Wingsang's" Boilers.—Double-ended boilers are very commonly used in marine practice for large powers, since they are lighter (and therefore cheaper) in proportion to power than single-ended boilers. The drawings on the previous pages, 322 and 323, to a scale of $\frac{1}{4}$ inch = 1 foot, illustrates the double-ended boiler of the S.S. *Wingsang*, constructed by Messrs. Hall, Russell & Co., Engineers and Shipbuilders, Aberdeen, for a steamer in the Chinese Coasting Trade.

The boiler is 13 feet 6 inches diameter, and 17 feet long. The shell is constructed of 4 rings of plate, which are united together circumferentially by double-riveted lap joints; the two middle rings, however, being fastened by a butt joint with a single-cover plate. The longitudinal joints are all double-riveted butt joints, and have double-cover plates. Fox's corrugated furnace flues are fitted to this boiler, and each furnace flue is connected to a *separate* combustion chamber. The combustion chambers are arched on the top, and bound together by plate and angle-iron stays. Of the return tubes every alternate one forms a stay between the two tube plates. As in the other marine boilers already described, these stay tubes are made thicker than the others, and are screwed into the back tube plate with nuts inside the combustion chambers, and are fitted into the front tube plate with nuts on each side. A very large dome, 3 feet diameter and 14 feet 3 inches long, is fitted to this boiler, and is attached by two wrought-iron neck pieces, in order to collect an abundance of dry steam.

In Lecture XXI., we illustrated and described a small pair of non-condensing marine engines, by Messrs. Shanks & Son of Arbroath, for use in steam launches, yachts, and small screw-tugs. It is of importance in such cases to minimise the longitudinal space occupied by the boiler as much as possible, and with this object in view, the above makers have adapted their vertical multitubular boiler described in the last Lecture.

Digitized by Google

The accompanying illustration will still further explain the internal construction of this form of boiler, as a sectional plan is shown in addition to the vertical section.

Great heating surface, easy repair, non-liability to prime, tubes easily brushed out, and the fact, that any sediment which may collect in the central fire-box tube can be quickly removed by simply opening a blow-off cock fitted on the outside shell to which is attached an external syphon pipe, are several of the advantages claimed for this arrangement. Further, no fire-brick deflectors or internal linings are used, neither is the shell weakened by cutting it away to admit the tubes, nor bolted together by flanges, while the centre of gravity of the whole boiler is kept as low as possible to insure stability in the small vessels for which it is adapted. The whole boiler is made of Siemens-Martin steel.

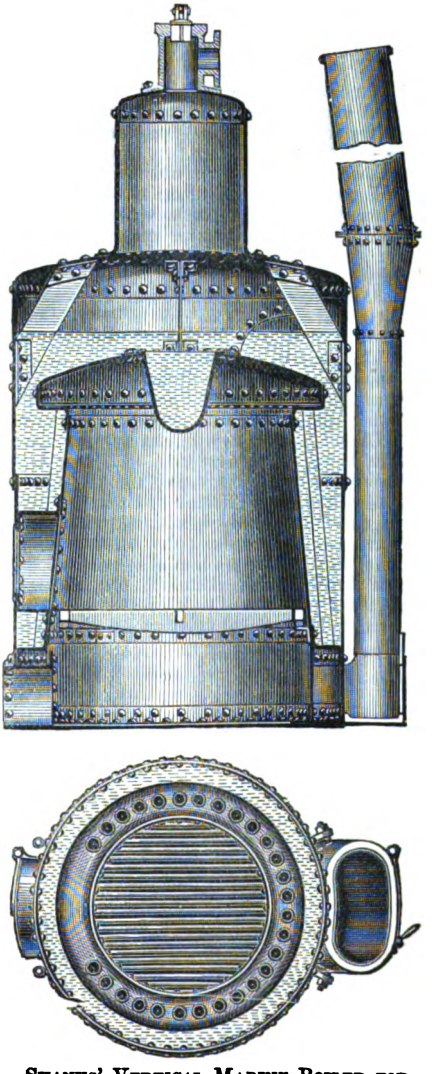

SHANKS' VERTICAL MARINE BOILER FOR LAUNCHES, YACHTS, AND SMALL TUGS.

Digitized by Google

LECTURE XXVIII.—QUESTIONS.

1. Enumerate the different classes of marine boilers at present in general use, and describe briefly their distinctive features. Give freehand sketches of each of these types, and state the maximum pressures at which they are worked. Why has the rectangular boiler been given up, and what two forms of rectangular boilers were in use 30 years ago?

2. Describe the construction of a marine boiler with four furnaces of modern type for high pressure steam. Sketch a cross and a longitudinal section, showing the water spaces, with a complete index of the various parts. How are the flat surfaces stayed? Enumerate all the principal fittings.

3. Describe the construction of, and sketch both in transverse and longitudinal section, a *marine* boiler. Mention some of the causes to which a loss of heat may be attributed when the boiler is in operation.

4. Sketch and describe by an index of parts a cylindrical high-pressure marine boiler with two furnaces, showing the mode of construction and staying, and describe the several processes employed in its construction from the commencement until its completion in the shop.

5. Sketch and describe clearly how the furnace tube of a cylindrical marine boiler is constructed, and how it is attached to the combustion chamber and front end plates, and also how expansion is allowed for.

6. Give a freehand sketch of a marine engine boiler, with all the necessary fittings in their relative positions; name them and their respective uses.

7. Sketch and describe by an index of parts Shanks' small vertical marine boiler for steam launches or small tugs.

8. Describe, with sketches, the general construction of a boiler for generating steam at a high pressure, selecting that one of the three (land, marine, or locomotive) with which you are most familiar. (*Adv. S. and A Exam.*, 1887.)

Digitized by Google

LECTURE XXIX.

BOILER CONSTRUCTION.

CONTENTS.—Materials used in Boiler Construction—Wrought-Iron, Steel, Copper—Joints of Boiler Plates, Riveted Joints, Punching and Drilling, Hand and Machine Riveting, Caulking, Welded Joints—Methods of Connecting the parts of the Shell, and Flues—Staying of Boilers—Strength of Boiler Shells—Strength of Flues—Strengthening Hoops for Flues—Corrugated Furnaces.

Materials used in Boiler Construction.—The earliest forms of steam boilers were constructed chiefly of cast-iron, but on account of the low tensile strength of this material and its unreliable nature when subjected to the variable temperature and stresses in a steam boiler it has been abandoned for many years, except for certain parts of water-tube boilers, such as in those of Babcock and Wilcox, illustrated in Lecture XXVII.

Wrought-Iron.—Until the recent introduction of mild, soft steel, wrought-iron was the material which was almost exclusively employed for the construction of steam boilers. Wrought-iron possesses great tenacity, combined with the important qualities of toughness and ductility. It is therefore well adapted to resist sudden strains and alterations of temperature, and does not give way suddenly or without warning. Also, its capability of being welded, forged, and flanged, adds to its value as a material for boiler construction; whilst it is a matter of importance that its strength is not influenced to any appreciable extent by a moderately large increase in temperature, such as high-pressure boilers are subjected to under ordinary circumstances.

The average ultimate tensile strength of wrought-iron bars may be taken at 22 tons (or about 50,000 lbs.) per square inch; the tensile strength of the best quality of bar iron being about 25 tons (56,000 lbs.) per square inch. The average tensile strength of wrought-iron plates as used for boilers, is—

With the grain = 21 tons (47,040 lbs.) per square inch.
Across „ „ = 19 „ (42,560 „) „ „ „

The plates used in boilermaking should all be of good quality; inferior plates give great trouble and are always unsatisfactory. The plates require to pass through some of the various processes of flanging, dishing, welding, punching and rolling cold, and in

Digitized by Google

dealing with inferior plates the greatest care must be exercised by the workmen to prevent them from injury before they are fitted into the boiler.

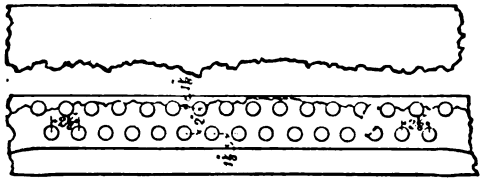

Fractured longitudinal joint in a new boiler from the use of a brittle iron plate. Norwich explosion, 25th September, 1866. The plates were of Cleveland iron, and when tested by bending, broke off short. They were quite wanting in ductility.

Only a very good quality of plate will stand flanging with impunity; and where joints have to be welded, satisfactory work cannot be obtained with an inferior plate which is wanting in ductility. Many inferior plates have a high tensile strength, but are brittle and do not possess that toughness and ductility which are essential qualities when much forging has to be done. The plates of the furnace flues are the most important, since these are more severely taxed by variations of temperature (causing sudden expansions and contractions), than any other plates in the boiler. The plates of the furnace crowns are alternately in contact with the fierce hot flames from the fire, and the currents of cold air which rush into the furnace each time the firing door is opened. The constant straining of the plates which is thus induced is very trying, and none but plates of very good quality will stand it for a great length of time. The various brands put upon plates, such as *Best*, and *Best Best*, &c., are very misleading, the "treble Best" plates of one maker being no better in some cases than the "Best" plates of another. It is only by the use of efficient testing machines, careful chemical and microscopical analysis, that a thorough knowledge of the capabilities and nature of a given quality of plate can be ascertained.

Steel.—This material has come into use very largely for boiler plates within the last few years, owing to the valuable properties it possesses when manufactured in the mild form. Mild steel boiler plates containing about 0·1 per cent. of carbon are now manufactured by the Bessemer, Siemens and basic (Thomas-Gilchrist) processes, and have an ultimate tensile strength of from 25 to 30 tons per square inch, with an elongation in test strips (8 inches long) of from 20 to 25 per cent. Steel plates with a

Digitized by Google

higher tensile strength than this, are usually too hard and brittle for boilermaking purposes. Owing to the greater tensile strength of steel, boilers made of that material are much lighter than when made of iron, and the plates being thinner, the joints are more easily made tight. Good mild boiler steel plates also possess a ductility superior to wrought-iron, and are therefore more suitable where flanging has to be done. They can be treated whether cold or hot by experienced workmen with the same freedom and usage as applied to malleable iron plates, except to a small extent in the case of welding, for the steel plates do not weld quite so freely as iron ones, and the welds are not so trustworthy. Steel scrap, however, welds into blooms quite as freely as wrought-iron scrap, and the forgings are generally superior.

There have been a few cases of the failure of boilers constructed of steel, the plates of which had been tested before they were used and found to be of a good quality. These failures have engendered in the minds of some engineers a certain amount of distrust of this material. Steel plates are undoubtedly more severely injured by punching than iron plates, and should always be annealed afterwards. Much of the distrust which has been felt in the use of steel for boilermaking has been caused by the use of plates quite unsuitable for that purpose, and their subsequent failure. Engineers have in many cases been too anxious to avail themselves of the high tensile strength of steel, forgetting that in so doing they are sacrificing the all-important quality of ductility. Steel is undoubtedly superior to iron as a material of construction for steam boilers, but great attention and care must be paid to its special properties and the methods of manipulation most suitable for it. Plates of a very mild nature, possessing moderately high tensile strength but great ductility, should invariably be used. Of all the tests applied to steel plates the bending test is the most valuable.

Copper.—Occasionally, copper has been used for boilermaking, although chiefly for small boilers. It is a much better conductor of heat than iron or steel, the ratio of the conductivities of copper and iron being expressed approximately by the numbers 74 to 12. It wears better under the intense heat of the furnace, and gives a higher evaporative efficiency. It has also the advantage

* See paper on "Injurious Effects of a Blue heat on Iron and Steel" by Mr. Stromeyer, read before the Institution of Civil Engineers. Vol. lxxxiv. of Proceedings. See also "General Remarks on Steel Boilers" by Thomas Trail, in his Pocket-Book on Boilers, Published by Charles Griffin & Co., London, 1888.

Digitized by Google

of resisting oxidation, or corrosion from the feed water. It is very ductile and malleable, and can therefore be worked with great ease, and will stand a considerable amount of straining action. It has, however, one great disadvantage—viz., its strength decreases to a large extent with an increase of temperature. At 32° Fah. its tensile strength is, on the average, 15 tons per square inch, but at 550° Fah. its tensile strength is reduced to about 75 per cent., and at 850° Fah. to 50 per cent. of this value. On account of this inferior strength and the high price of copper, its use for boiler making has been entirely given up, except for locomotive fire-boxes and stays.

Joints of Boiler Plates.—The joints in boiler shells and flues are formed either by riveting or welding.

Riveted Joints.—These are of various forms and strengths, but they may all be classified into, (1) lap-joints, (2) butt-joints.

The next set of diagrams, Nos. 1 and 2, show a single-riveted lap joint. This is the simplest but least efficient form of joint, and is only employed where great strength is not required.

A joint of this kind may be fractured in four different ways.

(1.) By the shearing of the rivets between the plates.

(2.) By the tearing of the plates along the line of rivet holes.

*(3.) By the crushing of the plate between its edge and the rivet holes, causing the metal between the edge of the plate and the rivet, to be forced out.

(4.) By the breaking of the plate between the rivet hole and the edge, in a line at right angles to the edge.

Another resistance must also be overcome before fracture takes place, viz., the frictional resistance of the plates.† The contraction of the rivets in cooling, compresses the plates s

* The third method of fracture cannot be avoided by giving lap to the plates, *if the surface of the holes* in the plate which takes the pull of the rivet *is too small.* In this case, the surface will be crushed, however large the lap of the plate is. This determines the diameter of the largest rivet that can be used for a given thickness of plate.

† The rivet must not be so small that it is unable to draw the plates firmly together, for if it is, the joint is unsatisfactory, and the rivet is under such great tension that the head is apt to fly off when it cools, or afterwards, when the plate is being caulked. The plates should be pressed tightly together when riveting takes place, and even until the rivet and the immediately surrounding part of the plate have been cooled, that the frictional resistance between the plates is sufficient to prevent them slipping over each other to the minutest extent due to the maximum stresses likely to occur. Some makers apply cold water to the plates, close to the rivet when they are being riveted up, in order to secure this desirable object with a saving of time and money.

Digitized by Google

tightly together, that a considerable frictional resistance is set up, which aids in preventing the plates from sliding over one another. The amount of this friction, however, is entirely dependent on the temperature at which the rivet is put in, and the tightness of the joint when the head is formed, and as it cannot therefore be calculated with any degree of accuracy it is usually neglected, in estimating the strength of a joint.

To find the best proportions for a riveted joint.

Let t = The thickness of the plates in inches.
d = „ diameter of the rivets „ „
a = „ area of the rivets in square inches $= \pi r^2 = \frac{\pi}{4} d^2$
p = „ pitch of the rivets in inches.
S_s = „ shearing strength of the rivets per square inch.
S_t = „ tensile „ „ „ plates „ „ „

Consider the strength of a jointed strip of plate of breadth $= p$. Then the best proportion will be obtained when the tearing resistance of the plates = the shearing resistance of the rivets.

$$(p - d)\, t \times S_t = a \times S_s$$

The shearing strength of rivet iron is usually about equal to the tensile strength of plate iron, therefore, we have

$$(p - d)\, t = a;\ \therefore p = \frac{a + d\, t}{t} = \frac{a}{t} + d.$$

The following relation between the diameter of the rivets and the thickness of the plates is given by Prof. Unwin,

$$d = 1{\cdot}2\ \sqrt{t},$$ which gives a very good proportion.

The following table and sketches (from Smart on "Steam-boilers," see footnote, page 322), show examples of several of the best types of riveted joints in use in modern practice. In calculating the strength of the joints the tensile strength of the steel plates has been taken at 28 tons per square inch; the shearing-stress of the steel rivets at 23 tons per square inch, and that of the iron rivets at 18 tons per square inch. In all the examples shown the shearing stress of the rivets is in excess of the tensile strength of the metal left between the rivet-holes, and it has been found that a considerable excess in this direction adds to the strength of the joint, and at the same time renders it more easily made and kept tight. As the steel plates have all been either drilled, or punched and afterwards annealed, no allowance for reduction of the strength of the metal left between the rivet-holes has been made; nor has any accession of strength been allowed for in those cases in which the holes have been drilled through the solid plates, although the strength of the metal left between the holes, at least in those joints with relatively close pitch of rivets, will be somewhat increased.

Digitized by Google

EXAMPLES OF RIVETED JOINTS.

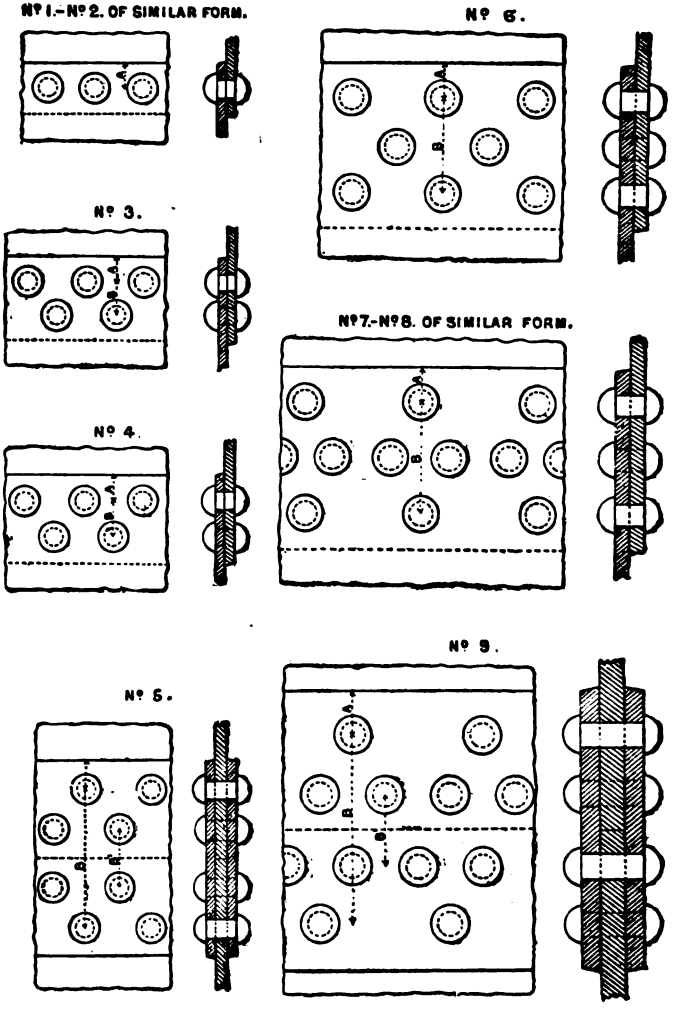

These figures, as well as those on pp. 335, 339, 348, and 349, have been supplied by the kind permission of the Council of the Institution of Civil Engineers, from Mr. Smart's Paper on "Steam Boilers." See vol. lxxx. of *Proceedings*, 1885.

Digitized by Google

Number of Joint.	Thickness of Plates.	Material of Plates.	How Perforated.	Diameter of Rivet Holes.	Material of Rivets.	Pitch of Outer Rows of Rivets.	Total Breadth of Overlap.	A.	B. and B^1.	Thickness of Covering Strips.	Tensile Strength of Joint in Percentage of that of Solid Plate.
	Inch.			Inch.		Inches.	Inches.	Inches.	Inches.	Inch.	
1	$\frac{3}{8}$	Iron	Punched, not annealed	$\frac{13}{16}$	Iron	2	$2\frac{1}{4}$	$1\frac{1}{8}$	...	...	43. Deduced from experiments by Kirkaldy, 1877.
2	$\frac{7}{16}$	,,	,, ,, ,,	,,	,,	,,	,,	,,	...	...	40. ,, ,,
3	$\frac{5}{16}$ full	Steel	Holes punched in outer belts of plates; afterwards enlarged by drilling: the inner belts drilled.	,,	,,	$2\frac{1}{2}$	$3\frac{1}{2}$	$1\frac{1}{16}$	$1\frac{3}{8}$ full	...	68. By calculation.
4	$\frac{3}{8}$	,,	Punched, afterwards annealed.	,,	Steel	$2\frac{1}{2}$	$3\frac{13}{16}$	$1\frac{1}{8}$	$1\frac{9}{16}$	...	68. ,, ,,
5	$\frac{1}{2}$	,,	,, ,, ,,	,,	Iron	$2\frac{7}{8}$	$8\frac{1}{4}$	$1\frac{3}{16}$ scant	B. $5\frac{15}{16}$ B^1. $2\frac{7}{16}$	$\frac{3}{8}$	72. ,, ,,
6	$\frac{5}{8}$	,,	Drilled	1	Steel	4	7	$1\frac{1}{2}$	4	...	75. ,, ,,
7	,,	,,	,, ...	,,	,,	5	$7\frac{3}{4}$	$1\frac{1}{2}$	$4\frac{3}{4}$	...	80. ,, ,,
8	$\frac{7}{8}$	,,	,, ...	$1\frac{3}{8}$	,,	$6\frac{7}{8}$	$10\frac{3}{4}$	$2\frac{1}{16}$	$6\frac{5}{8}$	...	80. ,, ,,
9	1	,,	,, ...	$1\frac{1}{8}$	,,	$5\frac{5}{8}$	$12\frac{1}{8}$	2	B. $8\frac{1}{8}$ B^1. $3\frac{1}{8}$	$\frac{13}{16}$	80. ,, ,,

Digitized by Google

The fracture of the plates by methods (3) and (4) depends upon the distance between the edge of the hole and the edge of the plate. If the lap of the plates be made from 3·2 times the diameter of the rivets when these are less than 1 inch diameter, to 3 times the diameter of the rivets when these are greater than 1 inch diameter, the joint will be equally strong to resist fracture in those two ways. If the lap is made more than this, there is difficulty in caulking since the plate springs.

Lap joints may be single, double, or triple riveted. A double-riveted lap joint is shown at figure No. 3 in the last diagram. In this joint there are two rows of rivets, and their pitch may be found in the same way as before.

Tearing resistance of plates = shearing resistance of rivets.

In this case, a strip of the jointed plate of breadth = p, has two rivets in it.

$$\therefore (p - d)\, t \times S_t = 2\, a \times S_s$$

$$\text{or } (p - d)\, t = 2\, a$$

$$\therefore p = \frac{2\, a}{t} + d.$$

When two plates which are lap jointed are subjected to a tensional stress acting at right angles to the joint, the plates tend to draw into line, and bending takes place at points opposite the edges of the overlapping plates. In a lap joint in this position, and subject to varying stress, there is a constant bending and straining motion going on about these points. These points, therefore, become particularly vulnerable to the corrosive action of the water in a boiler, and in the lap joints of a boiler which has been long at work, the inside of the plates is often found to be corroded or eaten away in a line parallel to the joint, and just at the beginning of the lap. This corrosive action, in time, greatly reduces the strength of the plate, especially if impure feed water be used, and it is known as *grooving*, *furrowing* or *guttering*, on account of the deep groove, furrow or gutter which is eaten out of the plate at this special point. The action is due, partly to the mechanical motion of the joint, and partly to the chemical action of the feed water. In lap joints with thick plates, this bending action is greatest. Such joints have therefore a less percentage of the strength of a solid plate when made of thick than of thin plates.

Fig. No. 5 in the last diagram shows a double-riveted *butt* joint. In this joint the plates are in line, being placed edge to edge, and the connection is made with single, or double-cover plates. These joints are variously made—viz., single, double, and triple riveted.

Digitized by Google

They have the same proportions as to pitch and diameter of rivets as lap joints. When a single-cover plate is used, the bending action is not altogether avoided, but with double-cover plates there is no tendency to bend, so that this injurious action may be entirely prevented by the use of the butt joint. When double-cover plates are used, the rivets are placed in double shear, *i.e.*, they must be cut through in two planes before the joint can give way. The butt joint with double-cover plates is the most efficient form of riveted joint, but it is also the most expensive. As compared with a lap joint, double the number of rivets require to be put in, and more than double the number of holes have to be punched or drilled.

In practice, double riveting is done in either of two ways. In the last figure referred to, viz., No. 5, the rivets in one row are placed opposite the spaces between the rivets of the other row. This method of riveting is known as *zig-zag* riveting. In the following figure, the method known as *chain* riveting, in which the rivets are placed immediately opposite each other, is shown. Zig-zag riveting requires less lap than chain riveting, and also makes a tighter joint, but the plates are not so strong, especially if the holes are punched. Owing to the greater strength of the chain-riveted joint, it is coming more into use than heretofore.

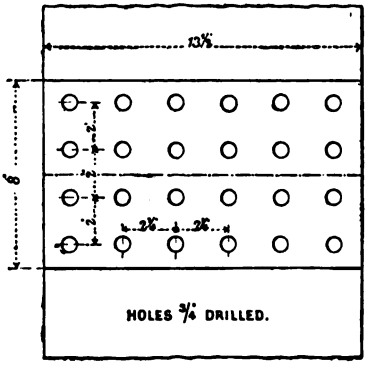

The following table, copied from Sir John Anderson's *Strength of Materials*, gives the relative strengths possessed by different forms of riveted joints. The strength of the solid plate is taken as 100, and it will be noticed, as we would naturally expect, that even the best of these joints falls far short of the solid plate in strength:—

Digitized by Google

Riveted Joints.

Description of Joint.	Riveting.	Rivet Holes.	Percentage of Strength of the Solid Plate Possessed by the Joint.
Lap, ...	Single, .	Punched, .	55
		Drilled, .	62
Lap, ...	Double, .	Punched, .	69
		Drilled, .	75
Butt, 1 cover, . .	Single, .	Punched, .	55
		Drilled, .	62
Butt, 1 cover, . .	Double, .	Punched, .	69
		Drilled, .	75
Butt, 2 covers, . .	Single, .	Punched, .	57
		Drilled, .	67
Butt, 2 covers, . .	Double, .	Punched, .	72
		Drilled, .	79

The student will see from this table that the single-riveted lap joint is the weakest form; also, that butt joints with single-cover plates, are not any *stronger* than lap joints, but, when double-cover plates are used, the percentage of plate strength is rather greater than that of lap joints.

Single-riveted lap joints are used for the circumferential joints of land boilers, up to about 5 ft. diameter, and working with a steam pressure of not more than 60 lbs. per square inch. Double-riveted lap joints are used for the circumferential joints of marine boilers, and for the longitudinal joints of land boilers of small diameter. Triple riveting, either in the form of lap or of butt joints, is used for the circumferential seams of marine boilers of large diameter and working at high pressures.

Punching and Drilling.—The holes in the plates of riveted joints are either punched or drilled. Each method offers some advantage which is not to be found in the other. The main objection to punching the holes is, that damage is done to the plate by the process. The extent to which a plate suffers from punching depends upon its quality. The injury done by punching to good tough ductile plates is very trifling, but when the plates are of a hard steely nature, their strength may be seriously impaired by the process. Mild steel plates stand punching very well, but, if the plates are at all hard, they may be considerably injured, even to the extent of a loss of tenacity of 30 per cent.

Digitized by Google

For this reason, it is usual to anneal steel plates which have been punched; after which, they are found to regain their original strength and properties. If the plates are not punched very carefully, it is often found, on putting them together, that the holes do not correspond. In order to admit the rivets, and bring the holes as nearly fair as possible, drifting is sometimes resorted to. This reprehensible practice is very injurious to the plates. It consists in driving a round tapered steel pin (known as a "drift") into the hole, in order to remove the obstruction. When the holes do not quite coincide, a drill should be run through them, and, if necessary, a larger rivet used, *but drifting should never be allowed.* In order to obtain perfect agreement of the rivet holes, some boilermakers punch the holes rather less in diameter than the size of the rivet, and when the plates are put together, they are then rimered out to the full size.

When the plates are drilled *separately*, it cannot be said that the holes correspond much better than when the plates are punched, and no advantage in this respect can be claimed for drilled holes. The only way to ensure absolute coincidence of the holes in the different plates, is to have the plates drilled when fixed in position. A number of boiler drilling machines are now in use, which effect this object. The shell plates, after they have been bent, are fixed together by service bolts, and the part of the shell so formed is placed upon a turning-table or some other arrangement for moving the shell round in front of the drills. There are usually two or more drills which operate simultaneously, all round the outside of the boiler shell, and these pierce through two or more thicknesses of plate. When each set of holes has been bored the turning arrangement moves the boiler shell through a distance equal to the pitch of the rivets, and the drills then proceed with the next set of holes. With an efficient machine of this kind the extra expense of drilling over that of punching the holes, is very trifling.

The holes formed by punching are necessarily tapered, since the hole in the die-block is always a little larger than the punch, and when the plates are put together the small ends of the holes are placed inside the joint, and the larger ends outside. By this arrangement, when the rivets are forced into the holes they hold the plates more firmly, and make a much tighter joint, than with the parallel holes of drilled plates; and, even although the rivet heads should be knocked off, the rivets would still retain a firm hold on the plates. The edges of drilled holes are sharp, and exercise a cutting action on the rivet, and it is found that increased strength is obtained by slightly counter-sinking the holes, but this adds considerably to the expense. This cutting

Digitized by Google

action is not experienced when the holes are punched, for the outer edge of a punched hole is not so sharply defined as a drilled hole. It has been found by experiment that when the plates are punched, the rivets are stronger, but the plates are weakened to a *greater* extent. Hence, as will be seen from the table on page 336, joints made with drilled holes are rather stronger than those in which the rivet holes have been punched.

Hand and Machine Riveting.—Formerly, all the joints of boilers were riveted by hand, but machine riveting is now used for all the joints to which a machine can be applied. The work done by good riveting machines is much superior in strength to hand work, and can be done much more expeditiously. The hydraulic riveting machine is the one which is most used at the present time, and seems to be the most suitable for the work. In riveting by hand, the blows are so sudden, that the part of the rivet struck by the hammer absorbs nearly the whole energy of the blow, and the formation of a shoulder commences before the hole is properly filled. In machine riveting, on the other hand, the pressure comes gradually on the whole body of rivet, and compresses it fully into the hole before forming a head at all; the joint is therefore much more secure. Before riveting a joint, care should be taken to have the plates drawn closely together, or the compression of the body of the rivet into the hole may cause a slight shoulder to be formed between the plates, and this prevents the closing of the joint.

We have seen from the table on page 336, that riveted joints are very much weaker than a parallel section of the solid plate, even a double-riveted butt-joint with double-cover plates only gives 79 per cent. of the plate strength. This is a very serious loss of strength, and various attempts have been made to bring up the strength of the joint to that of the solid plate. With this object in view, Sir Wm. Fairbairn patented a process of rolling plates with thickened edges, so that, after the holes were punched and the plates riveted, the sectional area of the plate between the rivets, would be equal to that of the solid plate. This plan, however, has never been adopted in practice, probably on the ground of expense.

A proposal has also been made to make the rivets of an elliptical section, so that by keeping the same pitch for the same sectional area of rivets there would be greater breadth of plate between the rivet holes, than when round rivets are used. Thus, if instead of using round rivets 1 inch diameter, rivets of equal area with flat sides (say $1\frac{1}{4}$ inch $\times$ $\frac{3}{4}$ inch) are used, and are fi- in position with the flat sides parallel, there is a gain

Digitized by Google

breadth of the plate between the rivet holes of ¼ inch. There are many objections, however, to this form of rivet, and it has not yet come into use.

Caulking.—In order that the riveted joints of boilers may be absolutely steam and water tight, they usually require to be caulked. This consists in burring down the edges of the plates with a tool somewhat like a chisel, but flat on the end (see fig. 2). Caulking, whilst indenting down the extreme edge of the lap, is liable to open the plates between the extreme edge and the point where they are held by the rivet-heads. For this reason, many engineers have given up the use of the caulking tool, and prefer to use only the fullering tool.—See fig 1. Caulking or fullering is greatly facilitated if the plates are planed on the edges with a slight bevel, and that is now done in the best boiler practice. The caulking tool recommended by Mr. Webb, Locomotive Superintendent of the London & North-Western Railway, and used in the works of that Railway Company at Crewe, is shown in the accompanying diagram, by which damage to the plates is prevented and the surfaces driven into close contact.

Fig. 1. (Scale ⅛) Fig. 2.

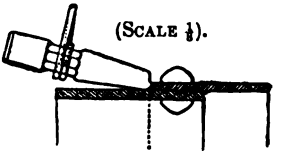

(Scale ⅛).

Webb's Caulking Tool.

Welded Joints.—In recent years welded joints have been introduced for boiler shells, but have not met with much favour. All chances of leakage are avoided by welding the joints, and the external corrosion which results from leakage is therefore prevented. If the joint is sound, it is stronger than any of the forms of riveted joint, but its soundness is always a matter of uncertainty. The strength of a riveted joint can be known with a considerable degree of accuracy, but the strength of a welded joint depends entirely on the skill and care of the workmen, and it is not always easy to decide from the external appearance whether or not the weld is sound. Welded joints, however, are very serviceable for furnace tubes and locomotive steam domes, &c., and are in general use for those purposes, but they have not been adopted to any great extent for boiler shells.

Methods of connecting the Parts of the Shell and Flues.—The boiler shell is composed of rings of plating from three to four feet six inches in width, rolled with the grain running circumferentially. These rings are connected to each other at their [illegible] butt joints. The flat end plates are connected to

Digitized by Google

the shell in various ways; the following diagram shows the three methods that are most common in practice.

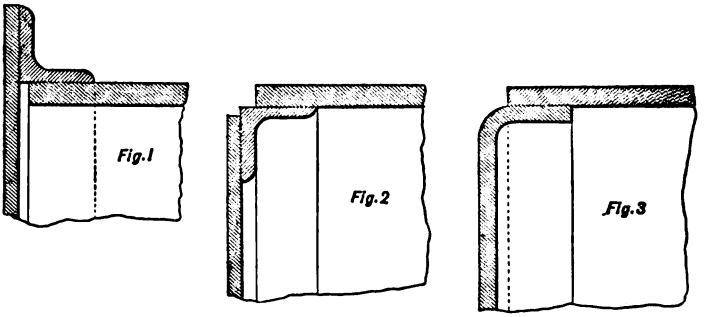

Figs. 1 and 2 show the method of attachment by riveting angle irons to the shell and then riveting the end plate to those angle irons. In fig. 1, the angle iron is attached *outside*, and in fig. 2, *inside* the shell. These two methods are largely used in land boilers, notably Lancashire and Cornish boilers. The attachment by outside angle irons admits of more springing of the end plates, and gives more room for mountings, &c., on the front end of the boiler. The outside angle irons are preferable when the space between the flue tubes and the shell plates does not exceed 5 or 6 inches, owing to the greater freedom allowed by them for the longitudinal expansion of the flue. A very common arrangement in land boilers is to attach the front end plate by outside angle irons, and the back end plate by inside angle irons.

Fig. 3 shows the method of flanging the end plate and then riveting it to the shell plates by an ordinary lap joint. This is the form most generally used in marine practice, and now also to a large extent for land boilers. It forms the best and simplest form of joint, but of course the end plate must be of thoroughly good quality in order to stand the flanging. When the end plate is attached by angle irons to the shell, the constant springing which goes on, due to the expansion and contraction of the furnace flues, is liable to cause grooving of the end plates close to the edge of the angle iron: but when the end plates are flanged, the bending is spread over the curvature at the root of the flange, and is not concentrated upon any particular point, consequently grooving is prevented to a great extent.

There are other methods of attaching the flat end plates to the

Digitized by Google

shell, such as flanging the end plates outwards, instead of inwards as shown, or fitting angle irons outside instead of inside the end plate, but these are not in such general use, and the only advantage they possess is, that the joint may be riveted wholly by machinery.

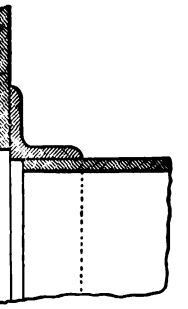

Flue Attachment.—The methods of attaching the flues to the end plates are very similar to those already described for fixing the shell to the end plates. Two of those in common use are shown in the diagram at the side. In one arrangement, an angle iron is used, and in the other, the end plate is flanged inwards. It is also sometimes flanged outwards.

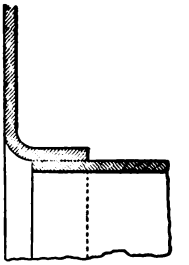

Staying of Boilers.—The tendency of pressure on a flat surface is to bulge it out to a circular form, and to prevent this deformation of the flat surfaces in steam boilers, all such surfaces require to be stayed. In Lancashire and Cornish boilers the only parts which require staying are the end plates; in marine boilers the end plates and the flat sides of the combustion chambers, and in locomotive boilers all the flat sides of the fire-box and the end plates.

Stays are made of various forms according to the position they occupy in the boiler. The fire-box stays of locomotives, which bind the flat sides of the fire-box to the outer shell, are shown in the annexed diagram.

The stays of marine boilers which bind the flat sides of the combustion chambers together, and to the end plates are similar in form, but have often nuts and washers on one or on both ends instead of riveted heads, and are generally screwed throughout their length. In locomotive boilers these stays are usually made of copper, but in marine boilers wrought iron or steel is used. Nuts and washers on the ends of the stays give better support to the plates than riveted heads, owing to their larger bearing surface.

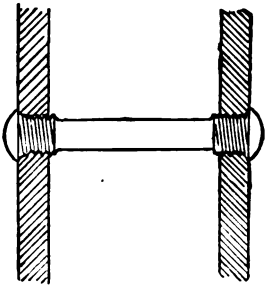

SCREW STAYS.

d plates of boilers are stayed with gusset stays, or with tays passing from end to end of the boiler, or with

Digitized by Google

Gusset stays are usually made of a single plate of iron, which is fixed to the shell and to the end plate, by means of angle irons on each side of the plate, as shown at, G S, on the following diagram. In marine boilers, the gusset stays are often made of a rod of iron with a flat plate forged on the end. The plate is riveted to the shell, and the rod passes diagonally across to the end plate, and is fixed there by nuts and washers on each side.

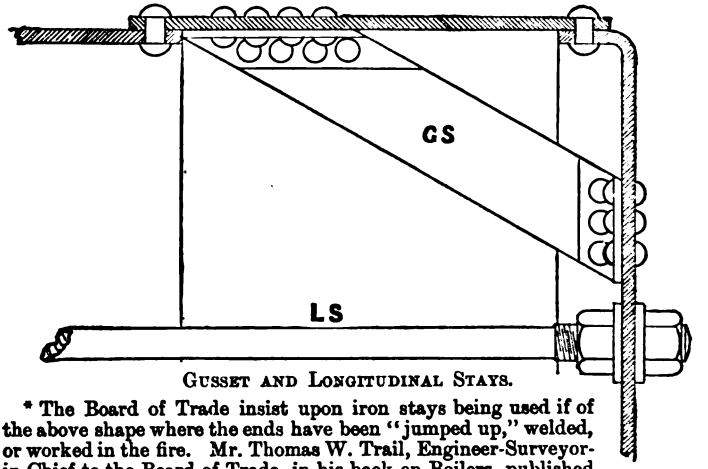

GUSSET AND LONGITUDINAL STAYS.

* The Board of Trade insist upon iron stays being used if of the above shape where the ends have been "jumped up," welded, or worked in the fire. Mr. Thomas W. Trail, Engineer-Surveyor-in-Chief to the Board of Trade, in his book on Boilers, published by Chas. Griffin & Co., gives the pressures, greatest surfaces, and sizes for iron and steel stays. See pp. 126 to 137 and 258 to 263, first edition, 1888.

Longitudinal stays are simply rods of iron or steel* screwed at the ends, which pass from one end of the boiler to the other, and are secured to the end plates by nuts and washers on both sides. One of these, L S, is shown on the above diagram. When these stays exceed 20 feet or thereby in length they tend to droop in the centre, and do not take up the full stress on the end plates. In this case, they should be supported at the centre by small brackets riveted to the shell.

Although the end plates require this staying, it is not desirable that they should be absolutely rigid, or the flues will not have sufficient freedom to expand. The object to be aimed at is to strengthen the ends, but yet as far as possible to preserve a certain amount of elasticity

The flat crowns of locomotive fire-boxes, and the combustion chambers of marine boilers, are usually stayed in the manner shown on the diagram of multitubular boiler in Lecture XVIII.,

Digitized by Google

and the marine boiler, page 320, in Lecture XXVIII. Cast-iron or preferably wrought-iron girder plates pass across the fire-box and rest on the vertical back and front plates. These girder plates support the furnace crown by means of bolts passing up through them, and are secured by nuts above, in the manner shown on the diagrams. In marine boilers, the combustion chamber is sometimes curved at the top and supported by stays from the end plate (p. 316), but it is usually flat on the top and supported in the same way as the locomotive fire-box just noticed. The top of a locomotive fire-box is sometimes also supported by copper or iron stays from the outer shell of the boiler, in the same way as the sides (see folding page, Lecture XXX.) In regard to crown stays, Mr. D. S. Smart, in his paper on *Steam Boilers*, read before the Institution of Civil Engineers,* remarks—

"Girder-stays have, until recently, been universally employed in the strengthening of fire-box crowns of the locomotive type of boilers; but direct stays between the crowns of the fire-box casings and the fire-box crowns are now to a great extent taking their place. Girder stays are decidedly objectionable in obstructing the circulation of the water, and in tending to cause overheating through the narrow water spaces between them and the crowns becoming choked with deposit; also on account of the severe stress thrown upon the plates on which they rest. The object in refraining from staying the crowns of the fire-box directly to the crowns of the casings has hitherto been to avoid undue strain from the greater upward expansion of the fire-box, but this objection may in a great measure be overcome, by making the crowns of the casings flat like the fire-box crowns with well rounded corners. The pressures on the two flat surfaces will nearly balance, and any unequal expansion will be taken up by the flat portions outside the stays, or by the rounded corners. The Author has seen a number of boilers constructed on this design which he believes will give perfect satisfaction. The two crowns are stayed directly to each other by bolts screwed into both, with the heads in the fire-box and nuts on the top of the outer casing, the part in the water and steam spaces being without threads. Numbers of boilers are also being made with the crowns of the casings of the usual semi-cylindrical form, and the flat fire-box crowns stayed directly to them by bolts in the manner just described, with no provision for expansion other than the spring of the plates all round. Others, when thus arranged, especially when the fire-boxes are of large size, have provision for the upward expansion of the first two rows of stays

* Volume lxxx. of Proceedings. Extract and diagrams taken from it by permission of the Council of the Inst. of C.E.

Digitized by Google

over the tube plate on getting up steam, as tube plates have been injured by too rigid a connection."

In marine and all tubular boilers, that part of the end plate through which the tubes pass, and which cannot be supported by gusset stays, is supported by some of the tubes themselves which are known as *stay* tubes. These stay tubes are made stronger than the others, and are usually screwed into the back and the front tube plates. They are sometimes fitted with nuts on the outside of the front tube plate and then beaded over at each end. The tube plates are seldom supported by rod stays between the tubes, for this plan is objectionable, since the rods are not exposed to the same temperature as the tubes, and consequently expand differently.

Strength of Boiler Shells.—The strongest form for any boiler, or vessel which supports internal pressure, is that of a sphere but there are many reasons for not adopting this form in practice. The early steam boilers were designed of the form which would give most heating surface, and in the opinion of the designer would give the highest evaporative efficiency, but no attention was given to the form which would be best adapted to support pressure. So long as very low pressure steam was used in those boilers, the question of form was not so important, but as soon as pressures of 30 lbs. per square inch or thereby were adopted, it became necessary to give some attention to the form of the shell which is best suited to withstand internal pressure. The cylindrical boiler has now been universally adopted as the nearest practical approach to the sphere.

To estimate the strength of a cylindrical boiler—

Let P = the bursting pressure in lbs. per square inch.
„ t = thickness of the plates in inches.
„ D = diameter of the boiler in „
Let S_t = tensile strength of the material at its weakest part in lbs. per square inch.

Consider the pressure on any very small surface, A B, (in the next diagram) which makes an angle, θ, with the horizontal diameter, C D. The normal pressure, P, on the surface, A B, may be resolved into two components, Ox, acting vertically, and, Oy, acting horizontally.

Then the angle E Oy = θ,
$\therefore$ „ „ P Oy = $90 - \theta$,
Therefore x = P · sin. $(90 - \theta)$,
= P · cos. θ,

Digitized by Google

Thus the vertical pressure on the surface, A B = P cos. θ × A B.

But cos. θ · A B = $a\,b$.

∴ The vertical pressure on A B = P × $a\,b$.

Hence, the sum of all the vertical components of, P, will be—

$$P \times CD = P \times D.$$

i.e., The force tending to rupture the boiler is equal to the pressure per square inch, multiplied by the diameter in inches.

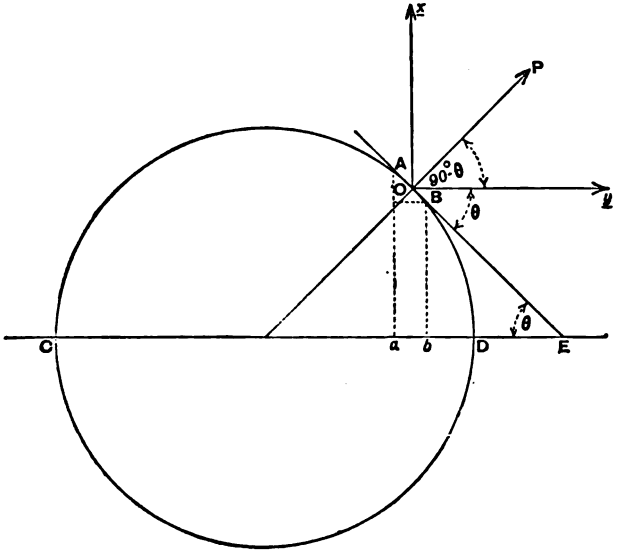

Also, the resistance of the material is equal to the tensile strength of the plates in lbs. per square inch, multiplied by the combined area of the plates on each side of a diameter.

Then at the point of rupture—

The pressure tending to cause rupture = The resistance of the material.

Considering the pressure on any length, L, of the boiler, We have—

$$P \times D \times L = 2\,(L \times t \times S_t)$$

$$\therefore P = \frac{2\,t\,S_t}{D}$$

$$\text{and } t = \frac{P\,D}{2\,S_t}$$

Digitized by Google

The value of P, given by the previous formula, is the pressure required to cause *longitudinal rupture*, *i.e.*, rupture in a line parallel to the axis of the boiler, but a cylindrical boiler may also be ruptured transversely, *i.e.*, in a line at right angles to the axis, due to the pressure on the ends.

Let P_1 = the bursting pressure in this case.

Then the force tending to cause rupture—

$$= P_1 \times \text{area of cross section of boiler} = P_1 \times \frac{\pi}{4} D^2.$$

Also, resistance of plates = area of metal in cross section × its tensile strength.

i.e., Force tending to cause rupture = Resistance of plates.

$$P_1 \times \frac{\pi}{4} D^2 = \pi D \times t \times S_t$$

$$\therefore P_1 = \frac{\pi D t S_t}{\frac{\pi}{4} D^2} = \frac{4 t S_t}{D}$$

$$\therefore \frac{P}{P_1} = \frac{\frac{2 t S_t}{D}}{\frac{4 t S_t}{D}} = \frac{1}{2}.$$

Hence, the pressure required to cause rupture of a boiler longitudinally, is only half that required to cause rupture in a transverse direction. For this reason, the longitudinal joints of boilers are always made stronger than the circumferential joints. In Cornish, Lancashire, and marine boilers having internal flues from end to end, the pressure required to cause transverse rupture is much greater than twice that required to cause longitudinal rupture, for then the effective area of the end plates is not equal to the whole area of cross section of the boiler, but is equal to the area of the boiler minus the area of the flues. Owing to this unequal stress on the joints of boilers, it has been proposed to plate boilers diagonally, having the joints at such an angle to the axis as would cause an equal stress on each joint. This plan, however, has never yet been put into actual practice.

In all actual calculations we must insert for, S_t, not the tensile strength of the plate, but the strength of the riveted joint. This is obtained by taking the percentage of plate strength given in the table on page 336, for the particular form of riveted joint with which the boiler is constructed.

EXAMPLE.—A Lancashire boiler is 7 feet 6 inches diameter, and

Digitized by Google

is required to work at a pressure of 75 lbs. per square inch. The longitudinal joints are double-riveted and are lap joints.

Find the thickness of wrought-iron plates required for the shell.

The average tensile strength of wrought-iron plates in the direction of the grain is 21 tons, or 47,040 lbs. per square inch (see page 327), and since a double-riveted lap joint (punched holes) gives 69 per cent. of plate strength,

The tensile strength of joint = 47,040 × ·69.
„ „ „ = 32,457 lbs. per square inch.

In steam boilers, a factor of safety of 6, is usually allowed, *i.e.*, the bursting pressure is six times the working pressure.

∴ The bursting pressure = 75 × 6.
„ „ „ = 450 lbs. per square inch.

$$\text{Then,} \quad t = \frac{P\,D}{2\,S_t} = \frac{450 \times 90}{2 \times 32457}$$

$$\therefore\ t = \cdot 6239'' = \frac{5}{8} \text{ inch nearly.}$$

Strength of Flues.—The strength of cylindrical tubes subjected to *internal* pressure is independent of the length of the tube, since the greater the length of the tube the more material there is to resist the increased pressure. In proof of this statement the student will have noticed that in the equation on page 345, the quantity, L, appeared on both sides, and was therefore cancelled out. It seems natural also to suppose that when a cylindrical tube is subjected to *external* pressure, its strength to resist collapse should not be dependent upon its length, and until the year 1858, this was assumed by all engineers.

Sir Wm. Fairbairn carried out a series of experiments in 1858, to ascertain the strength of cylindrical tubes subjected to external pressure, and his experiments threw much light on the behaviour of such tubes under those conditions.

As the result of his experiments, he deduced the following formula for the strength of boiler flues of iron :—

Let P = collapsing pressure in lbs. per square inch.
„ t = thickness of the plates of the flue in inches.
„ L = length of the flue in feet.
„ D = diameter of the flue in inches.

$$\text{Then, } P = 806{,}300\,\frac{t^{2.19}}{L \times D}$$

Digitized by Google

This shows that the collapsing pressure varies directly as the 2·19th power of the thickness, and inversely as the length and diameter.

When a cylindrical tube, which is not perfect in form, is subjected to *internal* pressure, the effect of the internal pressure is to rectify the defect, and to bring the tube to the form of an exact cylinder. Thus, in a boiler shell made with lap joints, the form of the cross section necessarily differs from that of a true circle, but when steam pressure comes upon it, the tension on the longitudinal joints tends to draw the plates into line, and causes them to take up an exactly circular form at any section. The effect of *external* pressure on an imperfectly circular tube is not to remedy the imperfection, but to increase the deviation from the true circular section and to produce greater distortion. Among Sir Wm. Fairbairn's experiments, the results may be noted of a test of two tubes subjected to external pressure, 37 in. long, 9 in. diameter, and ·14 in. thick, the same in every respect, except that one tube was lap jointed and the other butt jointed. The tube with the lap joint collapsed with 262 lbs. pressure per square inch, whilst the tube with the butt joint did not give way till a pressure of 378 lbs. per square inch was reached. This shows a loss of $\frac{1}{3}$ in resistance to collapse, by a departure of merely ·14 in. from the true circular section, and clearly indicates the necessity of making boiler flues *exactly cylindrical*. This is now very nearly approached in practice, flues being always made with either welded or butt joints.

Fairbairn's formula may be readily worked out by the use of logarithms; but for ordinary practical purposes, the *square* of the thickness may be used instead of the 2·19th power.

From the above, it will be apparent that cylindrical tubes, subjected to external pressure, require to be strengthened when long. Boiler flues are usually strengthened at intervals along their length, and this is effected in several ways, the principal of which are—

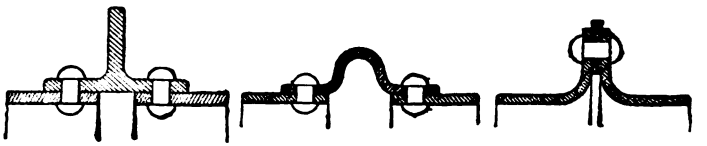

Scale $\frac{1}{4}$

T Iron Ring. Bowling Hoop. Adamson's Flanged Seam.

The T iron ring shown in the left-hand figure was

Digitized by Google

the first method adopted for strengthening the flues. It is riveted round the joints of each ring of plates in the manner shown in the diagram. This plan gives ample strength, but holds the flue too rigidly, and does not permit of free expansion and contraction. The rivet heads also are exposed to the intense heat of the furnace, and are liable to be burnt.

The form shown in the middle figure is known as the Bowling-hoop, and has been largely used for strengthening the furnace flues of boilers. It is weldless, and can be made in iron or steel. It possesses quite as great strength as the T iron ring, and, from its shape, allows all necessary freedom for the expansion of the flue. It has the same disadvantage as the T iron ring, however, since it exposes a double thickness of plates and two rows of rivets to the flames from the fire-grate.

The third method shown in the right-hand figure is known as the Adamson Flanged Seam, and consists in flanging the ends of the flue plates, and connecting them together by rivets with a ring between. This joint is very elastic, and permits of free expansion; it has sufficient strength without the ring, but the ring is used in order to give a caulking edge on each side of the lap. This is the method which is most generally adopted, although a number of engineers prefer the Bowling-hoop. The plates require to be of specially good quality to admit of flanging, and the flanging must be skilfully done, or the joint will give a considerable amount of trouble. The advantage of this joint is, that all rivets and double thicknesses of plate are removed from the action of the fire.

There is one other method of strengthening flues which is of more recent introduction than those already mentioned, and is shown in the diagram annexed.

PAXMAN'S FLUE JOINT.

The flue tubes are made of welded rings of iron or steel, and are rolled out accurately in a machine to the shape shown, and united by a simple lap joint. The strength of the flues is thus greatly increased, and yet free expansion is allowed.

The arrangement of these flue tubes in a boiler is shown in the diagram below.

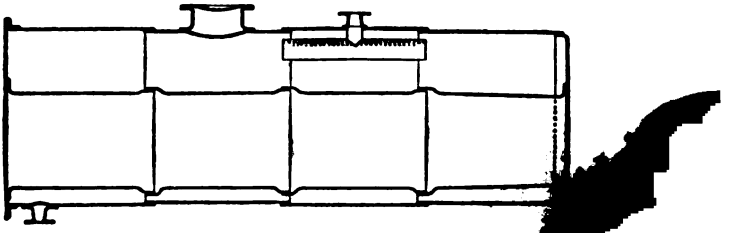

Digitized by Google

The rivet heads and double thicknesses of plate, although not removed entirely from the action of the flames, are out of immediate contact with them.

When flues are strengthened by any of these methods, their strength must be taken as that corresponding to the length between the rings or joints.

Corrugated Furnaces.—The furnaces of boilers are now very frequently fitted with corrugated flues. A furnace of this kind is shown in the marine boilers illustrated on pages 320 and 322. A corrugated furnace flue is stronger than one fitted with any of the strengthening rings already mentioned, and is of such a form as to allow every facility for expansion. The process of corrugating furnace flues was brought out and patented by Mr. Samson Fox in 1876. The appliances at first used for producing the corrugations were very severe and trying to the material, but now by the use of improved rolling mills, corrugated furnaces are produced in which the plates suffer no apparent injury.

Within the last few years corrugated furnace flues have been largely used, both for land and for marine boilers, with very satisfactory results. Greatly increased strength, combined with perfect elasticity, is the principal advantage, but a corrugated furnace also gives greater heating surface, and breaks up the flame and heated gases. They have, however, certain disadvantages, viz., sediment and salt incrustation may more readily gather in the hollows at the top of the flue than in a plain cylindrical one, and the dead ashes in the lower inside hollows. The elasticity or bellows action is somewhat too great in large boilers, and strengthening longitudinal stays are sometimes inserted round or near the outside of the Fox's tubes between the ends of the boiler.

LECTURE XXIX.—QUESTIONS.

1. Enumerate the chief advantages of wrought-iron as a suitable material for the construction of steam boilers. What kinds of iron plates should be discarded, and why? Give the average tensile strength of good wrought-iron with and across the grain.

2. State the chief advantages of mild steel over wrought-iron as a material for boiler construction, and explain the precautions that are necessary in selecting the plates and in manipulating them during the manufacture of a boiler. Give any instances known to you of the failure of steel boiler plates, and the reasons assigned for their failure. Give the tensile strength of good mild boiler plate steel.

3. In what kinds of boilers, and for what parts of them, is copper used? What advantages are claimed for copper in those cases over wrought-iron or steel? Why is cast-iron not used for the shell or flues of ordinary land

Digitized by Google

or marine boilers? In what kinds of boilers, and for what parts of them, is cast-iron still employed?

4. Sketch clearly in freehand the several chief forms of riveted joints, and indicate the advantages and disadvantages of each. Sketch a single-riveted joint for $\frac{3}{8}$-inch plate, marking the size of the rivets and the pitch you would employ. Show in what way such a joint might yield.

5. Determine the pitch of the rivets for a single-riveted joint of $\frac{1}{2}$-inch plate so that the joint may be equally strong to resist tearing and shearing. Diameter of rivets is $\frac{7}{8}$-inch. Safe shearing strength is 7,800 lbs. per square inch; safe tensile strength is 10,000 lbs. per square inch. *Ans.* 1·813 inch.

6. What rules are employed for calculating the strength of double-riveted lap joints in iron and steel plates? Is there any advantage in the use of elliptical rivets?

7. It is required to construct a double-riveted lap joint for $\frac{1}{2}$-inch plates. Give the proportions of the joint, and calculate the percentage of solid plate strength which it gives. *Ans.*

8. Describe with sketches any boiler or other piece of riveted work with which you have had anything to do. Give roughly the dimensions of rivets or stays, the details of joints; give fuller information about the part you have had most to do with. What sort of stress occurs in the plates at any riveted joint? Sketch the various ways in which fracture may occur.

9. What are the relative advantages and disadvantages of different methods of riveting?

10. How are rivets made, and from what kinds of iron? Sketch, with dimensions, single- and double-riveted butt joints of $\frac{5}{8}$-inch plates. Show a butt joint in a boiler where cross and longitudinal joints meet. Sketch the various ways in which the joint may be made at the bottom of a locomotive fire-box.

11. In a single-riveted lap joint exposed to tension, determine the diameter and pitch of the rivets in terms of the thickness of plate, and the three stresses f_t, f_s, and f_b,

where f_t = intensity of stress on material of plate.

f_s = ,, ,, ,, rivet.

f_b = ,, bearing pressure estimated on a diametral section of rivet.

Find the diameter (d) and pitch (p) for $\frac{1}{2}$-inch plates when $f_t = 30$, $f_s = 22$, and $f_b = 42$ tons per square inch, and estimate the efficiency of the joint. *Ans.* $p = 2{\cdot}88$ inches, and $d'' = 1{\cdot}21$ inch; 50 per cent.

12. Compare the joints of plates in the end of a Cornish or Lancashire boiler now with what they were twenty years ago.

13. Which is better, to drill or punch rivet holes? and why?

14. State the chief objections to punching boiler plates. Why should "drifting" the holes not be permitted in order to bring them fairly opposite each other? What is the best method for ensuring that the rivet holes in boiler plates shall be fairly opposite each other?

15. Why is hydraulic machine-riveting better than hand-riveting?

16. Describe the process of caulking a joint, and sketch the best form of caulking-tool with which you are best acquainted.

17. In what parts of boilers are welded joints used? Why are welded joints not more generally adopted?

18. Sketch and describe the principal plans of connecting the shell to the end plates in a large horizontal boiler, and give their several advantages and disadvantages, with reasons.

Digitized by Google

19. Sketch and describe the best plans of connecting the flues to the end plates of a horizontal land or marine boiler.

20. Mention those parts of a marine boiler which require to be stayed, and show clearly by sketches how the staying is done in actual practice.

21. Find the thickness of iron plates in a boiler shell 6 feet 4 inches in diameter, for a pressure of 40 lbs., the greatest tensile stress permissible in the material being 5,000 lbs. per square inch. *Ans.* ·304 inch.

22. A cylindrical boiler with flat ends, 30 feet long, 6 feet diameter, has two internal flues, each 2½ feet in diameter. Steam pressure in the boiler is 40 lbs.; what is the whole pressure on the internal surface in tons? How is the strength of such a boiler related to its diameter? *Ans.* 10·8 tons.

23. Find the greatest diameter of a cylindrical boiler to resist a pressure of 100 lbs. per square inch, the plates being ⅝-inch thick, and the safe stress upon the metal being 5,500 lbs. per square inch. *Ans.* 41·25 inches.

24. A cylinder constructed of boiler plate is 7 feet in diameter, and is subjected to an internal bursting pressure of 50 lbs. per square inch. Find the longitudinal stress on the metal per square inch of section, the thickness of the plate being ½-inch. *Ans.* 4,200 lbs.

25. Show fully by calculation why a cylindrical boiler is twice as likely to burst longitudinally as endwise, and give an example.

26. An ordinary cylindrical boiler has flat ends with two internal flues running from end to end. The boiler is 28 feet long, the shell 7 feet in diameter, and each of the two flues is 30 inches in diameter, the iron employed being ½-inch in thickness throughout. Taking the ultimate strength for the longitudinal or double-riveted joints at 35,000 lbs. per square inch of sectional area, and that for the transverse or single-riveted joints at 28,000 lbs. per square inch, find the ultimate bursting pressure—(1) along a longitudinal, (2) along a transverse section. *Ans.* 417; 1,532 lbs.

In what way are the internal flues strengthened?

27. Given the breaking tensile strength of wrought-iron, find the thickness of the shell of a cylindrical boiler which will support a given pressure of steam. Example—The diameter of the shell is 3½ feet, and the pressure of the steam is 150 lbs. on the square inch, what should be the thickness of the boiler plate when the tensile strength of wrought-iron is, *for safety*, estimated at three tons on the square inch? Prove that a tube under internal fluid pressure is twice as strong in a transverse as in a longitudinal direction. *Ans.* ·47 inch.

28. The furnace flue of a marine boiler is 7 ft. long and 3 ft. in diameter. The plates are ⅜-inch thick, and an Adamson flanged joint is fitted at the centre. Find the collapsing pressure of the flue. *Ans.* 374 lbs. per sq. inch.

29. Find an expression for the thickness of the shell of a cylindrical boiler, the tensile strength of the material, the pressure of steam, and the diameter of the shell being given. If a cylindrical boiler 5 feet in diameter will support a steam pressure of 20 lbs., what should be the diameter of a boiler of like material, construction, and thickness of plate, for supporting a steam pressure of 100 lbs.? (*Adv. S. and A. Exam.*, 1887.)

30. In a cylindrical steam boiler prove the formulæ for the forces tending to produce rupture of the material in the circumferential and longitudinal directions. (*Adv. S. and A. Exam.*, 1889.)

31. Why do ordinary steam boilers fail to utilise a large proportion of the heat developed in the complete combustion of the fuel employed? Sketch a longitudinal section through the fire box and tubes of a high-pressure boiler. Describe the construction of the boiler, and show the method of staying the part most likely to give way under pressure. (*Adv. S. and A. Exam.*, 1889.)

Digitized by Google

LECTURE XXX.

LOCOMOTIVES.

CONTENTS.—Early history of the Locomotive Engine—Caledonian Railway Passenger Locomotive—Folding-page Illustration of Express Locomotive by Messrs. Dubs & Co., with Complete Explanatory Index and Descriptive Specification, Drawings of Details and Dimensions—Giffard's Injector—Compound Locomotives.

THE present course of Lectures being limited to thirty, and having occupied so much time and space in the previous Lectures, with the necessary history, theory, and detailed description of stationary engines, marine engines, and boilers, we find that we can give but a very cursory glance at the history of the Locomotive Engine; reserving the major portion of this, the last Lecture, to the illustration and explanation of one of the latest and best Express Passenger Locomotives.*

* Students who are particularly interested in the Locomotive Engine should refer to—

(1) Professor Thurston's *History of the Steam Engine* for a popular description of the many attempts at, and ultimate success of, Steam Locomotion on Railways.

(2) *Locomotive Engineering and the Mechanism of Railways*, by Zerah Colburn, C.E., and Daniel Kinnear Clark, M. Inst. C.E., published by William Collins & Sons, Glasgow (to be found in most Engineering and Philosophical Societies' Libraries), for not only a very complete history of the Locomotive, but also a detailed description of all the best known forms up to 1871.

(3) *Modern Steam Practice and Engineering* (divisions 3 and 4) by J. G. Winton and W. J. Millar, C.E., published by Messrs. Blackie & Son, Glasgow, &c., for the detailed mechanism of Locomotives.

(4) A paper, with discussion, on "Compound Locomotive Engines" by Francis W. Webb, M. Inst. C.E., Loco. Supt. of the London & North-Western Railway, read before The Institution of Mechanical Engineers, July 1883. See vol. of *Proc. Inst. Mech. Engs.* for 1883, pp. 438 to 462.

(5) A paper, with discussion, on "The Construction of Locomotive Engines, with some Results of the Working of those on the London, Brighton, and South Coast Railway," by William Stroudley, M. Inst. C.E., Loco. Supt. of the L. B. and S. C. Ry., read before The Institution of Civil Engineers, March 3, 1885. See vol. lxxxi., pp. 76 to 166 of *Proc. Inst. C. E.*

(6) Papers with discussions, "Experimenting on the Steam Jacketing and Compounding of Locomotives in Russia," by Alex. Borodin, of Kief; "On the working of Compound Locomotives in India," by Mr. Sandiford, of Lahore. See *The Engineer*, Aug. 20 and 27, 1886. Copied from *Trans. Inst. Mech. Engs.* for 1886.

Digitized by Google

Early History of the Locomotive.—In 1680, Sir Isaac Newton proposed the adoption of a Steam Carriage having a spherical boiler half filled with water, mounted on a four-wheeled carriage. A fire was to be placed underneath the boiler for raising steam in the same, and a nozzle projecting aft from the steam space, so that by the reaction of the issuing steam on the air (as in Hero's engine) the carriage should be propelled forward. This was probably the first suggestion for applying the force of steam to locomotion on land.

In 1759, Dr. Robinson suggested to Watt the application of the then known steam engine to land locomotion.

In 1784, Watt patented a locomotive engine, and in the same year Murdoch, Watt's assistant, made a working model which went at a rapid rate along the road. It was fitted with a grasshopper engine, and the model is preserved in the Patent Museum at South Kensington as an interesting relic.

In 1802, Trevithick and Vivian patented a Steam Locomotive having a high-pressure engine, the model of which is also in the Patent Museum at South Kensington. In 1803–4, Trevithick and Vivian built a full-sized locomotive at Camborne, which drove from there to Plymouth, a distance of 90 miles, before being shipped there for London, where its powers were publicly exhibited for some time.

In 1813, Hedley patented a locomotive with smooth wheels to work on a smooth rail. Hitherto, it had been generally supposed that rack or toothed rails and wheels were necessary in order that the locomotive might be able to draw a sufficient load, but Hedley's one drew eight loaded coal waggons at a speed of 5 miles an hour, with a steam pressure of 50 lbs. on the square inch. He it was who first turned the exhaust pipe up the chimney and contracted its end, in order to intensify the draught in the fire and flues.

In 1814, George Stephenson (who gave the real practical start to the locomotive) built his first engine at Killingworth. * For the next fifteen years, Stephenson, as well as several other engineers, worked most earnestly at making and perfecting the locomotive, until, in 1829, the famous competition trial, under certain stipulated conditions, took place between (1) the "*Novelty*," constructed by Messrs. Braithwaite & Ericsson (the latter being the person who first successfully introduced the screw propeller), (2) the "*Sansparíel*," by Hackworth, (3) the "*Perseverance*," by Burnstall, and (4) the "*Rocket*," by Stephenson, when the last proved the most successful engine, far exceeding even the most sanguine expectations of its designer.

* See *Life of George Stephenson*, by Smiles.

Digitized by Google

From 1829, until the present date, the history of the locomotive is a vast series of improvements in details, far too varied and numerous for us to mention here, until now it is one of the most perfect and beautiful of all the machines with which the engineer has to deal, and of which he is justly proud.

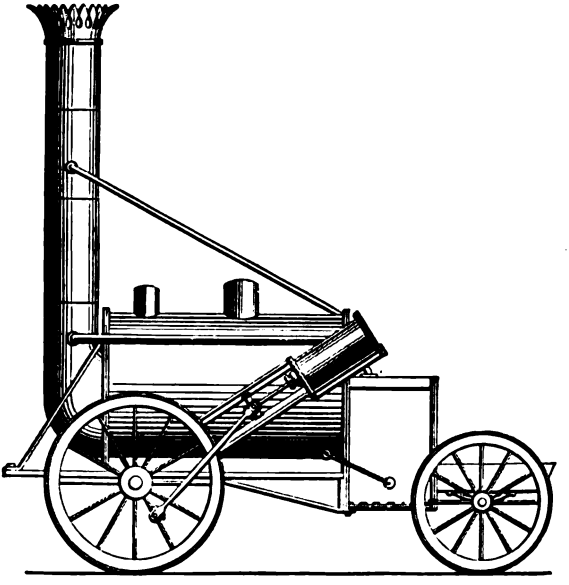

THE "ROCKET," 1829. *

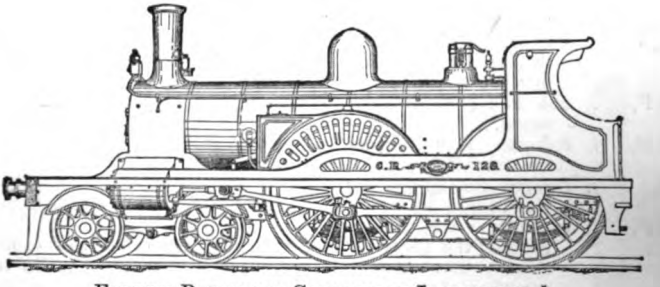

EXPRESS-PASSENGER CALEDONIAN LOCOMOTIVE. *

* From Rankine's *Steam Engine* (Chas. Griffin & Co., London).

Digitized by Google

Express Passenger Locomotive.—As an example of the mere outward form of an Express Passenger Locomotive at present in use on the Caledonian Railway, we insert the preceding figure in order that the student may compare it with the "*Rocket.*"

It is similar in general design to the engine illustrated in the following folding page. The student should first thoroughly master the detailed index of parts, together with the drawings, and then carefully compare them with the several details in the selected extracts from the Specification, to which the engine was built and finished only last year.

INDEX OF PARTS TO THE LOCOMOTIVE.

NOTE.—*As a guide to finding several of the parts on the* FOLDING PLATE, *as well as on the separate sketches, the words, side view, end view, plan or seperate sketches (under specification), have been added in the following index, in italics and within brackets.*

COMBUSTION AND HEATING ARRANGEMENTS.

(*See also separate Detail Sketches of Boiler*).

F D, for Fire Door (*on side and end views*). The accompanying figure shows the method of opening and shutting the same by the handle.

F D H, ,, Fire-door Handle.

F B, ,, Fire Bars, on which the coals are placed, with spaces between them to allow air to pass up through the coals and cause combustion, and to allow ashes to fall into the ashpan.

A P, ,, Ash Pan (*side and end views*).

A H, ,, Ash-pan Handle (*end view near* **T W S**).

B, ,, Bearers for supporting **F B** at both ends.

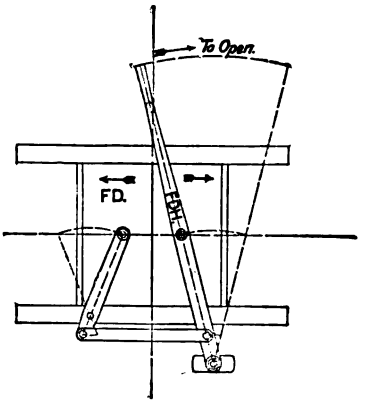

FIRE DOOR AND HANDLE.

D P, ,, Deflector Plate, for deflecting the gases as they rise from the coals, and causing them to mix properly, thus ensuring a more complete consumption of the smoke.

B A, ,, Brick Arch, also for deflecting the gases and preventing them from rushing along the tubes as they rise from the coals.

Digitized by Google

F Bx, for Fire Box, in which the products of combustion should assume the form of a colourless gas. Its sides are usually made of copper, as then they transmit the heat to the water more quickly than they would if made of iron, and resist better the action of the fire.

F T P, ,, Fire-box Tube Plate (*on side and end views*).

T, ,, Tubes, along which the heated gases pass on their way to the chimney, heating the water which surrounds them. They are fixed at the one end to **F Bx**, and at the othor to **S B**.

T P, ,, Smoke-box Tube Plate (*on side view and plan*).

S B, ,, Smoke Box, from which the smoke passes on through—

S A, ,, Spark Arrester. It prevents the sparks falling into the Steam Exhaust Pipe, and getting outside.

Cy, ,, Chimney.

S B D, ,, Smoke-box Door, which admits of access to the Boiler Tubes and Steam Pipes.

S B H, ,, Smoke-box Door Handles, for fastening and securing the Smoke-box Door. The inner one is first screwed up, and then the outer one, so as to act like a jam or lock nut.

S B P, ,, Steam Blower Pipe, for causing a draught when getting up steam pressure in the boiler. It can be opened at pleasure by the driver working—

S B W, ,, Steam Blower Wheel, placed in **C A B** (*on end view*).

BOILER.

(*See also Detail Sketches*).

O S, for Outer Shell, in three lengths, front, middle, and fire-box shell. The front is secured to the smoke-box tube plate, **T P**, by an outside cylindrical angle iron. The middle length is also cylindrical, and is attached to the front length by a lap joint. The fire-box shell is cylindrical on the top, but flat on the side, to allow of its going between the main-frames, **M F**. It is secured to the middle length by a lap joint.

S D, ,, Steam Dome (*on side and end views*). It is placed on the top of the outer shell of the boiler, and is used for collecting dry steam, and for holding the steam regulator.

W L, ,, Wood Lagging. The boiler is covered all round the barrel with wood lagging; sheathed over with sheet iron to prevent radiation of heat.

C S, ,, Copper Stays (*on end view*), for securing the outer shell of the fire box to the inside fire box, and thus strengthening both of them. (*We illustrated and explained this stay in Lecture XXIX.* p. 341.

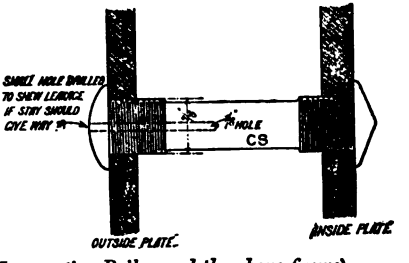

See also sketch of Locomotive Boiler and the above figure).

Digitized by Google

F B R S, for Fire-box Roof Stays, for preventing the flat roof of the copper box from collapsing.
S S, ,, Sling Stays, which are attached by pins to **F B R S**, and also to angle irons riveted to the roof of outer shell, thus causing the weight of the fire box to be carried by the outer shell, and bracing the two together.
L S, ,, Longitudinal Stays (*on side and end views*), for staying together, smoke-box tube plate, and back plate of fire-box shell.
Pm S, ,, Palm Stay (*on side view, and also on separate sketch of boiler*), to support fire-box tube plate, **F T P**.
F E B, ,, Fire-box Expansion Bracket (*on end view and separate sketch of boiler*). This forms a support for boiler, and at the same time allows for any expansion caused by heat.
F P C, ,, Fusible Plug, for fire-box Crown (*separate sketch of boiler*).
W P, ,, Washout Plugs (*separate sketch of boiler*).

STEAM REGULATING GEAR.

(*Shown also on Boiler and Detail Sketches under Specification.*)

S R H, for Steam Regulator Handle.
R S B, ,, Regulator Stuffing Box.
S R R, ,, Steam Regulator Rod. The end of this rod inside the boiler is supported by a footstep as shown.
C L, ,, Connecting Link between **S R R** and **S R V** for actuating—
S R V, ,, Steam Regulator Valve, for governing the admission of steam from the steam dome to the cylinders.
R V, ,, Relieving Valve, for relieving the full pressure of steam from **S R V**, and thus rendering it easily opened, as well as to allow the driver to start the locomotive gently. **R V** works directly on the back of **S R V**. It opens first and shuts last.
S R P, ,, Steam Regulator Pipe made of cast iron.
C I S P, ,, Copper Internal Steam Pipe.
S P C, ,, Steam Pipe to Cylinder Valve Chests.
S E P, ,, Steam Exhaust Pipe or "Blast Pipe."

SAFETY VALVE GEAR.

(*Shown also on Boiler and Detail Sketches under Specification.*)

R S V, for Ramsbottom Safety Valves (*side and end views*).
S V S, ,, Safety Valve Seat, which is bolted to a man-hole, formed on the top of the outer shell of fire box.
B V, ,, Brass Valves.
R H, ,, Relieving Handle, which extends into **C A B**. The driver, by pulling or pushing the end of this lever, can let steam escape from one or other of the safety valves at pleasure, or ascertain that they are not sticking in their seats.

CYLINDER GEAR.

(*See also Detail Sketches under Specification.*)

S P, for Steam Ports of Cylinders (*side view and plan*).
C, ,, Cylinders (*on side view and plan*).

Digitized by Google

E P, for Exhaust Ports of Cylinders (*on side view and plan*).
S Et P, ,, Steam Exhaust Pipe, by which the steam passes from the exhaust port, **E P**, up the chimney to the open air, creating the characteristic noise of a locomotive, and causing a partial vacuum below; thus inducing a draught from the fire box through the tubes, and maintaining a lively combustion of the coal.
P, ,, Piston (*on plan*).
F C C, ,, Front Cylinder Cover (*on plan*).
B C C, ,, Back Cylinder Cover (*on plan*).
C S B, ,, Cylinder Stuffing Box (*on plan*).
V C, ,, Valve Chest of Cylinder (*on side view and plan*).
V C C, ,, Valve Chest Cover (*on side view and plan*).
W C, ,, Water Cock for blowing off water from cylinders and valve chests (*on side view*).
W C R, ,, Water Cock Rod, so connected as to open or close all the water or "pet cocks" of both cylinders and both valve chests at the same time. It leads to the starting platform.

SLIDE VALVE MOTION GEAR.

(*See also Detail Sketches under Specification.*)

V, for Slide Valve.
V S, ,, Slide Valve Spindle and Buckle.
V S B, ,, Slide Valve Spindle Stuffing Box.
V C R, ,, Slide Valve Connecting Rod (*on side view and plan*).
V C G, ,, Slide Valve Connecting Rod Guide (*on side view and plan*).
L, ,, Link of Link Motion.
F E R, ,, Forward Eccentric Rod (*side view and plan*).
B E R, ,, Backward Eccentric Rod (*side view and plan*).
E S, ,, Eccentric Straps (*side view and plan*).
E P, ,, Eccentric Pulleys, keyed on to driving axle, **D A.**
R L L, ,, Reversing Lifting Links (*on side view and plan*).
R L, ,, Reversing Lever (*on side view and plan*).
R M L, ,, Reversing Motion Lever, which is fixed to the same shaft as **R L**, thus forming a bell-crank lever.
B W, ,, Balance Weight, to act as a counterpoise to the weight of link, **L**, eccentric rods, **F E R** and **B E R**, &c. (*side view and plan*).
R M R, ,, Reversing Motion Rod, which transmits the motion between
R M, ,, Reversing Motion Handle, Bracket, and Screw and **R M L** (*on side and end view*).
R S, ,, Reversing Shaft (*on side view and plan*).

MAIN DRIVING GEAR.

(*See also Detail Sketches under Specification*).

P R, for Piston Rod.
C H, ,, Piston Rod Crosshead.
C R, ,, Connecting Rod (*on plan*).
C P, ,, Crank Pin (*on plan*).
Cg R, ,, Coupling Rod (*on plan and end view*).
S Bk, ,, Slide Blocks (*on plan*).
S Br, ,, Slide Bars (*side view and plan*).

Digitized by Google

EXTRACTS FROM SPECIFICATION

OF

FOUR-WHEELS COUPLED, BOGIE, EXPRESS ENGINES,

CONSTRUCTED BY MESSRS. DUBS & Co., GLASGOW LOCOMOTIVE WOR
FOR THE LONDON, CHATHAM, AND DOVER RAILWAY COMPANY.

Principal Dimensions.

	Ft.
Inside diameter of cylinders,	1
Stroke of piston,	2
Length of boiler barrel,	10
Diameter ,, ,, outside,	4
Length of fire-box shell outside,	5
Width ,, ,, at bottom,	3
Number of tubes, 199.	
Diameter ,, outside,	0
Height of centre of boiler from rails,	7
Length of engine, frame,	27
Thickness ,, ,,	0
Distance between ,,	4
Diameter of driving wheels on tread } coupled,	6
,, trailing ,, ,, }	
,, bogie ,, ,,	3
Wheel base, total from front to hind wheels,	21
Centres of bogie wheels,	5
Centre of bogie to centre of driving wheels,	9
,, driving ,, trailing ,,	8
Height of centre of buffer from rails,	3
Working steam pressure,	140 lbs. per sq.
Testing pressure (with warm water),	200 ,,

(*In reading the following descriptive specification of boiler, &c., refer to folding plate and views, pp.* 364 *to* 378).

Boiler.—The barrel, dome, fire-box casing, tube plates, all angle iro rivets, and stays were made of Lowmoor iron. The barrel is telescopic, made in two plates, the circumferential seams being single riveted, and longitudinal seams butt jointed with inside and outside strips, dou riveted. The tube plate is attached to barrel by a ring of angle ir bored, faced, turned on edges and shrunk on, and zigzag riveted to bo The dome is in one plate, welded at the seam, and flanged at the bottom fit barrel, to which it is double riveted. A strengthening liner plate placed inside the barrel, round the opening for the dome. The top has angle iron ring riveted to it, and is fitted with a strong wrought-ir cover, the cover and angle iron being accurately faced so as to mak perfectly steam-tight joint.

The fire-box shell was made as shown, the sides and top being in plate. The front or throat plate was flanged forward and single riveted

Digitized by Google

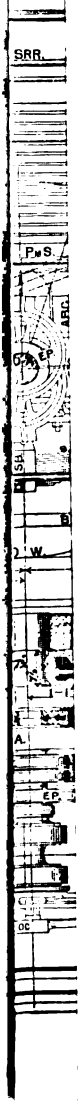

Digitized by Google

THE NEW YORK
PUBLIC LIBRARY

ASTOR, LENOX
TILDEN FOUNDATIONS

Digitized by Google

the barrel, and the back plate to the sides and top as shown. Angle irons for carrying the sling stays were riveted to the top in the position shown.

The manhole is of wrought-iron, flanged top and bottom, and single riveted to the casing, the top flange being accurately faced to receive the safety valves. The boiler is stayed by six longitudinal stays, screwed into the back plate of casing, and passing through the smoke-box tube plate, with nut and washer on either side. The back plate is strengthened, where the stays pass through, by a liner plate riveted to it on the inside. The longitudinal stays are supported in the middle of their length, in the manner shown. The fire hole is circular. The ring of the section shown is of Yorkshire iron, and riveted to the casing and fire-box plates. The foundation ring is also of Yorkshire iron, with the corners of the form shown, carefully riveted so as to be thoroughly tight. Twenty-one brass taper mud-plugs were fitted in suitable positions for washing out purposes.

Fire Box.—The fire-box plates and stays are of copper of the very best quality. The plates were annealed, both before and after flanging, and strips were cut off and tested by being doubled cold, without showing any sign of fracture. They were also analysed, and found to contain less than ·5 per cent. of impurities. The sides and crown are in one plate. The crown is curved as shown, and stayed with eight Yorkshire iron roof bars of the section shown, each secured by thirteen studs 1 inch diameter, screwed through the crown plate into the bar, with nut on the underside of plate. Six of the roof bars are connected to the angle irons on the casing plate by twelve sling stays of Yorkshire iron. Great care was taken to bed the ends of the roof bars accurately on the fire-box plates, and to see that the sling stays were of the correct length and bearing on the pins, top and bottom.

The tube plate is stayed to the barrel by six 1-inch copper stays, screwed through the plate into palm stays riveted to the barrel. The copper stays were screwed tightly into the fire box and casing plates, and neatly riveted over, the thread being turned off the part between the plates (see Fig., p. 357). A brass plug with fusible centre was inserted in the crown of the fire box. A brick arch was built in the fire box and supported on studs in the manner shown. The fire-box back plate was dished at fire hole to meet the ring and the fire hole fitted with an air deflector scoop, and sliding doors, in the manner shown on the drawings (see p. 356).

The fire grate consists of nineteen wrought-iron fire bars, and two cast-iron fire bars of the section shown, supported on two cast-iron comb-bar bearers by four wrought-iron brackets, studded to foundation ring. The fire box is riveted with the best Yorkshire iron rivets.

All the plates were planed or turned on the edges before being put together. The holes were drilled and rimmed out perfectly fair with each other in all plates and angle irons. Before being lagged the boiler was tested to a pressure of 200 lbs. per square inch with warm water, and afterwards to 160 lbs. per square inch with steam, and found to be perfectly tight under these pressures.

Tubes.—The tubes are of copper, solid drawn, No. 9 B.W.G. at the fire-box end, tapering to 12 B.W.G. at the smoke-box end. They were secured by a roller tube expander and fixed with ferrules at the fire-box end. The ferrules were of ferrule steel, and were put into the tubes a tight driving fit. The tubes project through the smoke-box tube plate about $\frac{1}{16}$ inch.

Smoke Box and Spark Arrester.—The plates for smoke box and door are of BB Staffordshire iron, having a perfectly smooth surface. The rivets were countersunk outside and filed smooth. Wrought-iron liners were placed against the tube plate, and the sides, and front of smoke box.

Digitized by Google

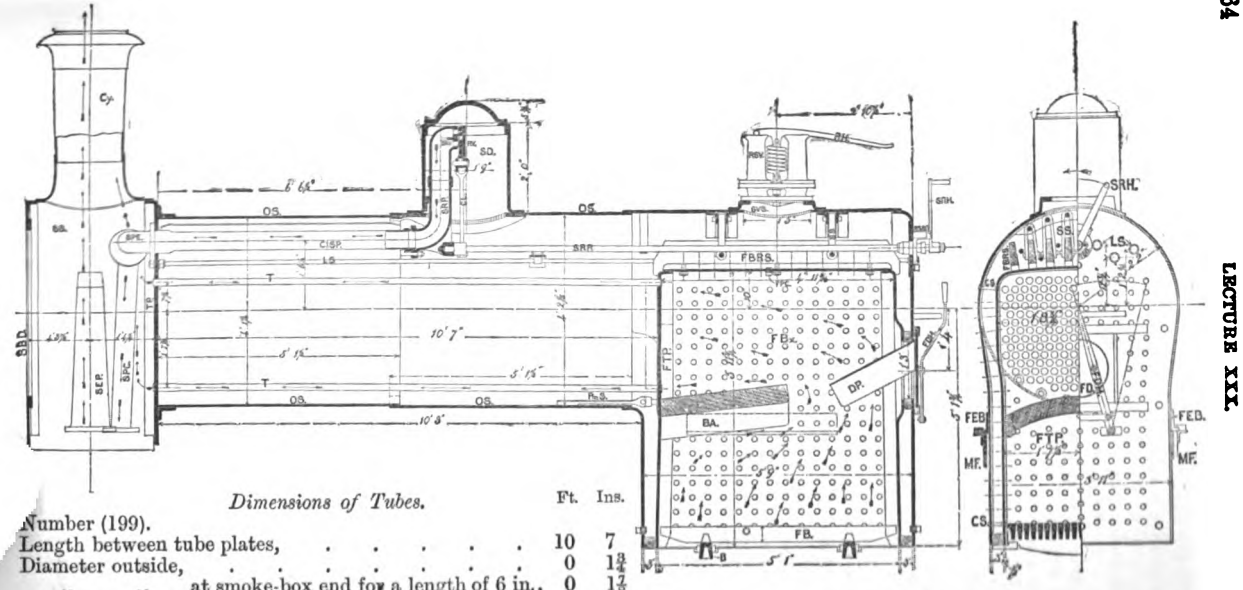

Dimensions of Tubes.

	Ft.	Ins.
Number (199).		
Length between tube plates, ...	10	7
Diameter outside, ...	0	$1\frac{3}{4}$
,, ,, at smoke-box end for a length of 6 in.,	0	$1\frac{7}{8}$
Distance apart of centres, about	0	$2\frac{1}{2}$

SECTION THROUGH LOCOMOTIVE BOILER CONSTRUCTED BY MESSRS. DUBS & CO., GLASGOW LOCOMOTIVE WORKS, FOR THE LONDON, CHATHAM, AND DOVER RAILWAY COMPANY.

Digitized by Google

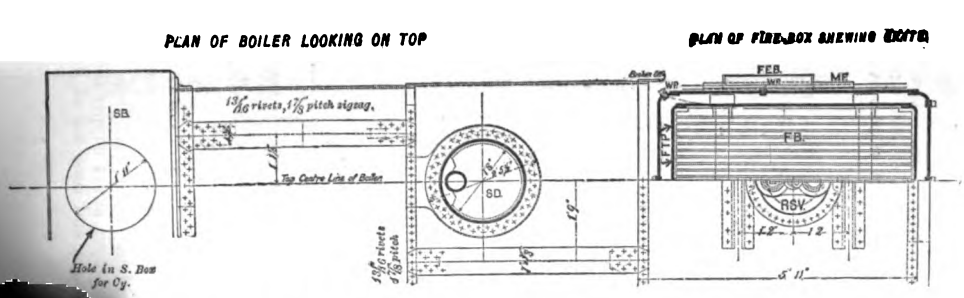

T PLAN OF BOILER SHOWING THE RIVETING, &C., OF LOCOMOTIVE CONSTRUCTED BY MESSRS. DUBS & CO., GLASGOW LOCOMOTIVE WORKS, FOR THE LONDON, CHATHAM, AND DOVER RAILWAY COMPANY.

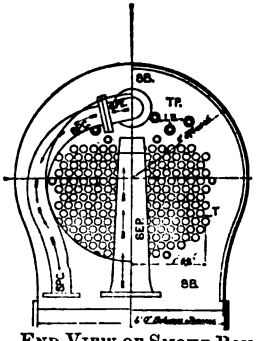

END VIEW OF SMOKE BOX, SHOWING TUBES, ONE STEAM PIPE, AND THE EXHAUST PIPE.

Dimensions of Barrel, and Fire Box, &c.

	Ft.	Ins.
Length of barrel,	10	3
Diameter ,, outside at fire-box end,	4	3
Thickness ,, plates,	0	$0\frac{7}{16}$
,, of tube plate,	0	$0\frac{7}{8}$
,, of dome ,,	0	$0\frac{9}{16}$
Length of fire-box shell,	5	9
Breadth ,, ,, at bottom outside,	3	11
Depth ,, ,, from centre line,	5	2
Thickness ,, ,, plates,	0	$0\frac{1}{2}$
Section of foundation ring, 3 inches × $2\frac{3}{4}$″		
,, fire-hole ,, 2 ,, × $2\frac{3}{8}$″		
Diameter of rivets in boiler,	0	$0\frac{13}{16}$
,, ,, foundation ring,	0	$0\frac{7}{8}$
Height of centre line of boiler from rail,	7	2

	Ft.	Ins.
Length at top outside,	5	$0\frac{1}{2}$
,, bottom,	5	2
Breadth ,,	3	4
Depth inside,	6	0
Water space at bottom, all round,	0	3
Thickness of plates,	0	$0\frac{1}{2}$
,, tube plate,	0	$0\frac{13}{16}$ and $0\frac{1}{2}$
Diameter of fire hole,	1	$4\frac{1}{2}$
,, rivets,	0	$0\frac{13}{16}$
,, copper stays,	0	$0\frac{7}{8}$ and 1

Digitized by Google

The door was dished, as shown on drawings, and fitted with baffle plates and suitable dart, handles, and hinges; the latter were finished bright.

A wrought-iron grate for arresting sparks is supported in the smoke box in a horizontal position, just below top of blast pipe.

Dimensions of Smoke Box, &c.

	Ft.	Ins.
Length of smoke box (inside),	2	8½
Width on centre line of boiler (inside),	4	11
Thickness of plates,	0	0⅜
Section of angle iron (2½ in. by 2½ in. by ½ in.)		
,, ring round door hole (3 in. by ¾ in.)		
Diameter of rivets,	0	0⅝
Pitch of rivets, about	0	3

Chimney.—The chimney is of BB Staffordshire iron, jointed with a butt strip, and the rivets countersunk, and filed smooth on the outside. The bottom was carefully fitted to smoke box. The top is of cast iron, of the shape shown in the drawing.

Dimensions of Chimney.

	Ft.	Ins.
Height of top of chimney from rail,	13	3⅞
Diameter inside at top,	1	6
,, ,, bottom,	1	5
Thickness of plates,	0	0¼

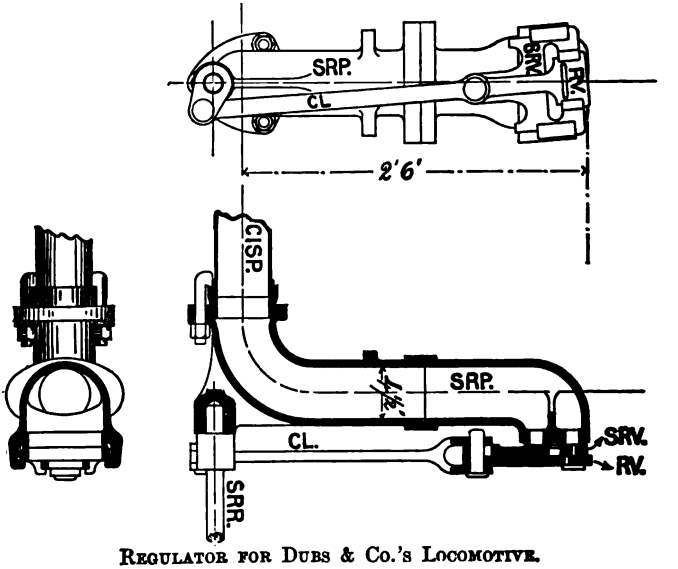

REGULATOR FOR DUBS & CO.'S LOCOMOTIVE.

Regulator and Steam Pipes.—The regulator is of cast iron, and the head fitted with double valves. The steam pipes are of copper sheets, hard soldered together in the inside. The flanges and cone are of brass.

Digitized by Google

The steam pipe in the boiler is fixed to the tube plate by a turned ferrule of the best steel, and to the regulator by means of three claw bolts.

Dimensions of Regulator, &c.

	Ft.	Ins.
Diameter of steam pipes (inside), ...	0	4½
Thickness ,, ,, (No. 7 B.W.G.)		

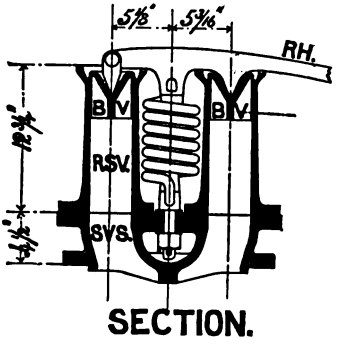

SECTION.

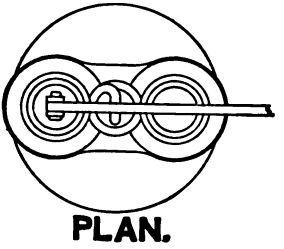

PLAN.

RAMSBOTTOM'S SAFETY VALVE FOR DUBS & CO.'S LOCOMOTIVE.

Exhaust or Blast Pipe.—The blast pipe to be of cast iron, the top to be turned and bored to the form shown (in side view of folding plate and end view of boiler smoke box, p. 365).

Dimensions of Exhaust Pipe.

	Ft.	Ins.
Diameter of blast orifice, .	0	4¾
Height of blast pipe above top row of tubes, . . .	0	2

Safety Valves.—These are of the kind known as "Ramsbottom's duplex" safety valves. They are fixed on the fire-box casing. The columns are of brass turned bright, fixed on a cast-iron man-hole cover. The springs were set so as to blow off at 140 lbs. per square inch. All the joints were accurately faced, and found to be perfectly steam-tight.

Dimensions of Safety Valves.

	Ft.	Ins.
Diameter of valves, . .	0	3½
Distance apart of columns, .	0	10 5/16
Height of brass columns, .	1	0¾
Diameter of spring steel, .	0	0 13/16
,, man-hole cover, .	1	6
Thickness of seat, . . .	0	1⅛

Frames.—Inside frames and front buffer plate are of Bessemer steel solid rolled. The plates were planed all over on the inner side, and the outer side was finished with a good smooth surface. All holes were marked from one template, and drilled and rhymed out to the exact size given.

The frames are set in, and thoroughly well stayed together by the buffer plate, and with plates and angle irons at the leading end in the manner shown on drawings. The front foot-plate is thinned at the edges. A plate is placed horizontally under the cylinders to carry the bogie pin, and was firmly bolted to angle irons on the frames. A transverse stay arranged to carry the back ends of motion bars and the intermediate spindle guides, and a vertical stay in front of the fire-box casing is fixed in the position shown. Over the trailing axle a horizontal flanged stay is securely bolted to the frames, and at the hind end of frames is placed a cast-iron foot-plate arranged for the tender couplings. All these stay plates and angle irons

Digitized by Google

are of BB Staffordshire iron. The casting and the transverse stays are securely fastened to the frames, the former by turned bolts, and the latter by cold turned rivets of Lowmoor iron. The rubbing pieces for tender buffers were well case-hardened. When finished, the frames were adjusted perfectly true and square in all directions. The foot-plate is of steel, of the same make as the frames, and the rivets are counter-sunk on the top. Guard bars of the form shown are securely bolted to the frames and buffer plate.

Dimensions of Frames.

	Ft.	Ins.	
Thickness of frames (finished),	0	1	
Depth over leading bogie wheel,	1	3	
,, between cylinders and driving horns,	1	5½	
,, between driving and trailing wheels (open),	1	9⅞	
Greatest depth of plates,	2	11¼	
Distance from centre of bogie to front end of frame,	4	10	
,, ,, ,, to centre of driving axle,	9	10	
,, ,, driving axle to centre of trailing axle,	8	4	
,, ,, trailing axle to hind end of frame,	4	0	
Extreme length of plates,	27	0	
Distance from centre of driving axle to front of fire-box casing,	1	10⅛	
Distance between frames at leading ends,	3	9	
,, ,, from cylinders to trailing end,	4	0	
Height of top of frame from rail,	4	1½	
Depth of buffer plate,	1	3	
Length ,,	7	6	
Thickness ,,	0	1¼	steel.
Thickness of foot-plate,	0	0½	,,
Extreme width of foot-plate,	7	8	

The OUTSIDE frames are of BB Staffordshire angle iron (the step-plates being welded on), and stayed to the inside frames as shown on drawings. All the rivets are countersunk outside.

Section of angle iron for outside frames 3 in. by 2½ in. by $\frac{7}{16}$ in.

Buffers and Draw Gear.—The buffers have wrought-iron cases and plungers, with Timmis' unequal section steel springs.

The draw bar is of best chain cable iron, so arranged as to radiate. It is fitted with a screw coupling of the same quality of iron, and has an india-rubber spring.

Dimensions for Buffers and Draw Bar.

	Ft.	Ins.
Height of centre line of buffers from rail,	3	5
Distance of centres of buffers apart,	5	8
Diameter of draw bar,	0	2

Cylinders.—The cylinders were made of the best close-grained, hard and strong cold-blast cast iron, twice cast, as hard as could be worked, and are perfectly free from honeycomb or other defects. They were bored out perfectly true, the ends being bell-mouthed. The cylinders have loose covers at each end, the back cover having provision for carrying the front

Digitized by Google

ends of the slide bars. All joints and faces were machined and scraped to a true surface, so that a perfect joint was obtained. When the cylinders were bolted together they were tested by hydraulic pressure to 250 lbs. per square inch. The cylinders being horizontal, they are attached to the frames by flanges (the holes in which and in the frames are rosebitted), and secured by turned bolts to a driving fit. The front flanges and covers project through the frames as shown on drawings. Waste-water cocks and gear worked from the left hand side of foot-plate are provided as shown. The top of cylinders are covered with a non-conducting cement.

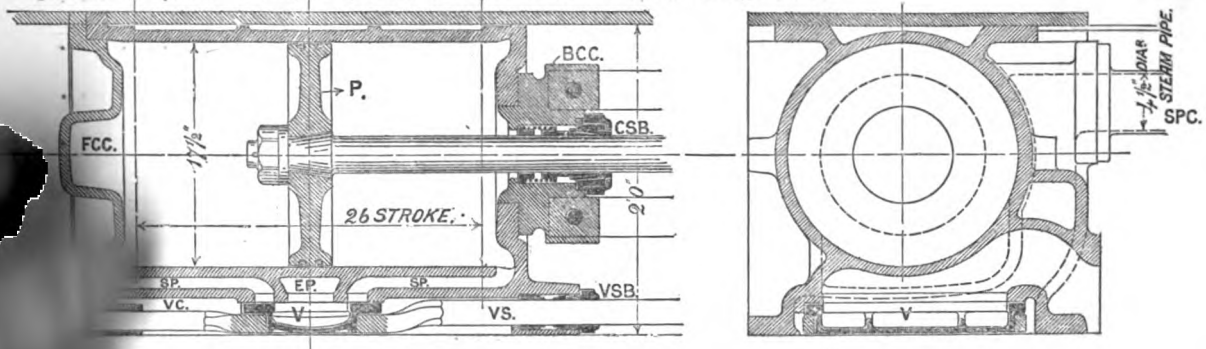

LONGITUDINAL SECTION. CROSS SECTION.

LINDERS FOR LOCOMOTIVE MADE BY MESSRS. DUBS & CO. FOR THE CHATHAM AND DOVER RAILWAY CO.

Dimensions of Cylinders.

	Ft.	Ins.		Ft.	Ins.
Diameter,	1	5½	Width of steam ports,	0	1¾
Stroke,	2	2	,, exhaust ports,	0	3½
Distance of centres,	2	4	Thickness of bridges,	0	1
,, valve spindles centres,	0	3½	Length of working face,	0	11
Thickness of metal,	0	0⅞	Distance from centre of driving axle		
Length of ports,	1	2	to centre of exhaust port,	9	10

Digitized by Google

Pistons.—The pistons are of tough cast brass. They were accurately fitted to cones on ends of the piston rods, and fixed with nuts as shown on drawings. The piston heads were turned $\frac{1}{32}$ in. smaller than bore of cylinder. The packing rings are of cast iron, turned *only* on the outside and on edges, and were made $\frac{1}{2}$ in. larger in diameter than cylinder bore, and then cut and sprung into their places. When finished the whole was made an easy but accurate fit in the cylinder, so that the piston and rod could be moved backwards and forwards by hand.

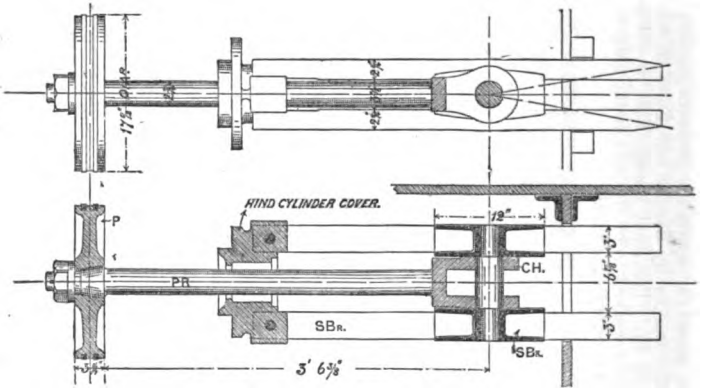

PISTONS, PISTON RODS, CROSSHEADS, SLIDE BARS AND SLIDE BLOCKS FOR DUBS & CO.'S LOCOMOTIVE.

Dimensions of Pistons and Piston Rods.

	Ft.	Ins.		Ft.	Ins.
Width of Piston, . .	0	3½	Diameter of rod, . .	0	2¾
,, of rings, . . .	0	0⅛	Length, cone to crosshead,	3	0⅝
Thickness of rings, . .	0	0½	Taper of cone in piston, 1 in 3, No. of threads 6 per inch (at piston end).		

Piston Rods and Crossheads.—These are of the best mild cast steel, with cone and nut for fixing to piston; the crosshead being solid with the rod as shown by the accompanying figures.

Gudgeon Pins.—These are of the best Yorkshire iron, well case-hardened, and keyed into the crossheads as shown.

Slide Bars and Slide Blocks.—The slide bars are of cast steel of the same kind as the piston rods, and are provided with brass oil syphons. The slide blocks are of the same metal as the cylinders.

Dimensions of Slide Bars and Blocks.

	Ft.	Ins.
Width of slide bars, ...	0	3
Thickness ,, ...	0	2¼
Length ,, ...	3	8¾
,, of slide block, ...	1	0
Distance between slide bars vertically, ...	0	3¾
,, ,, ,, horizontally, ...	0	6⅞

Digitized by Google

Connecting Rods.—These are of the best Yorkshire iron, forged solid in one length. The brasses are of gun-metal (5 parts of copper to 1 part of tin), those for the big ends are lined with white metal (tin 16 parts, antimony 2 parts, and copper 1½ parts, by weight). The cottars are of steel, and the bolts of the best Lowmoor iron forged from the solid.

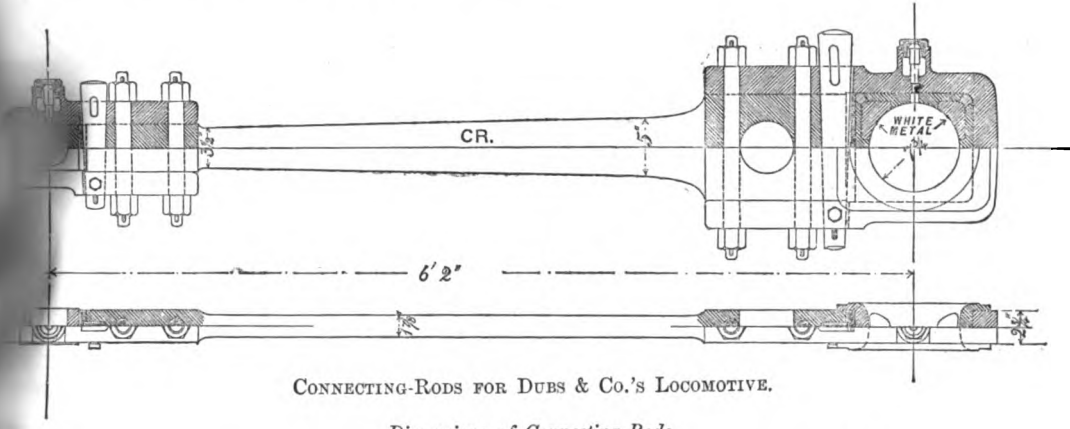

CONNECTING-RODS FOR DUBS & CO.'S LOCOMOTIVE.

Dimensions of Connecting-Rods.

	Ft.	Ins.
Distance of centres, ...	6	2
Diameter of big end bearings, ...	0	7¾
,, small end bearings, ...	0	3

Slide Valves and Valve Spindles.—The valves are of phosphor bronze. The spindle frames and intermediate spindles are of best Yorkshire iron, of the form shown on drawings, the latter being well case-hardened.

The intermediate spindle guides are of cast iron, bushed with gun-metal bushes, and have oil-boxes cast to them.

Dimensions of Slide Valves and Spindles.

	Ft.	Ins.
Lap of valve,	0	1
Lead (in full gear),	0	$0\frac{3}{32}$
Centre line of valve above centre line of cylinder,	0	1
Diameter of valve spindle,	0	$1\frac{7}{8}$
,, intermediate spindle,	0	$3\frac{1}{4}$
Length of ,, ,, guides,	1	0

Valve Motion.—The valve motion was made from the best scrap iron, and the working and rubbing surfaces were thoroughly case-hardened, and provided with oil syphons and grooves. The expansion link is supported at the top from the forward eccentric rod pin, the reversing shaft being below the motion and behind the link. The motion pins are of the best iron, thoroughly case-hardened and accurately fitted. The eccentric sheaves are in two pieces, the smaller piece being of best scrap iron, and the larger piece of cylinder metal. The eccentric straps are of wrought iron, solid with the rod, and are fitted with white metal liners of the same quality as the connecting-rod brasses are fitted with.

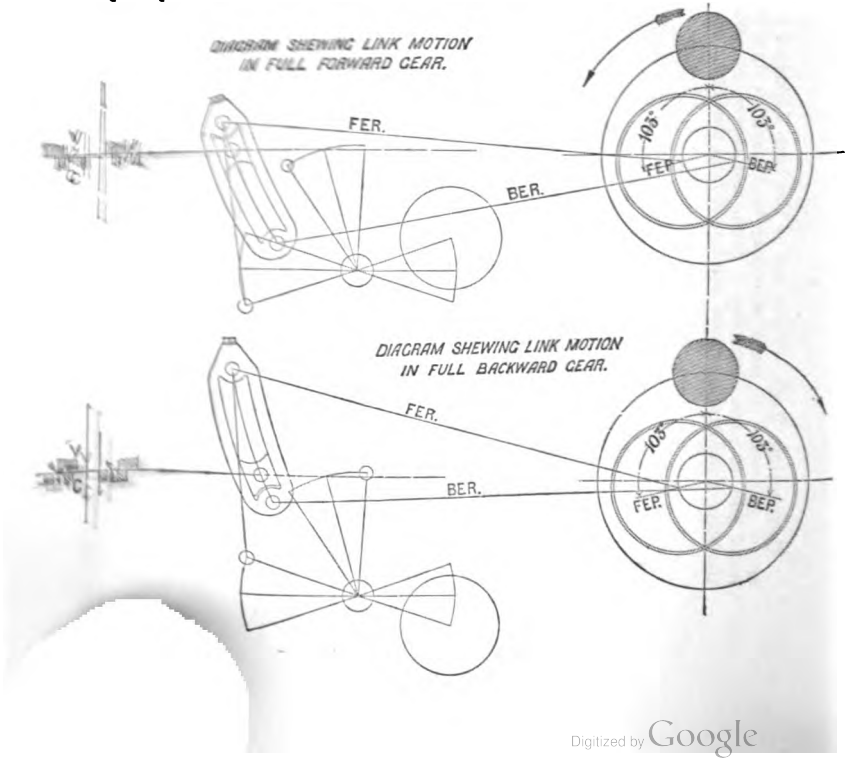

Digitized by Google

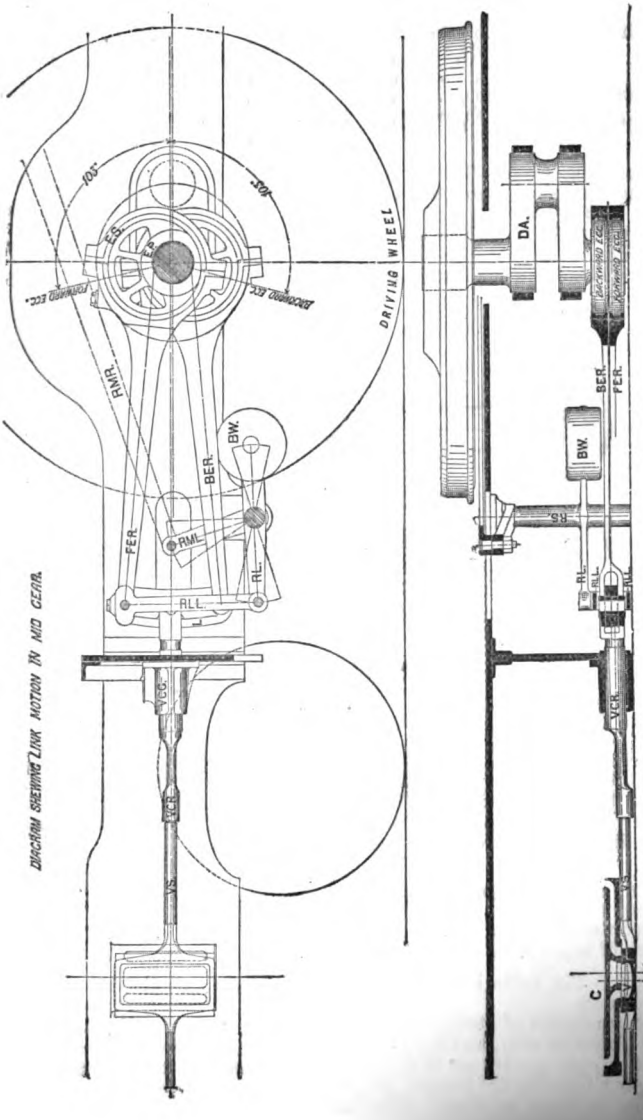

SLIDE VALVES AND VALVE MOTION FOR DUBS & CO.'S LOCOMOTIVE.

Digitized by Google

Dimensions of Valve Motion.

	Ft.	Ins.
Length of expansion link between centres,	1	4½
,, eccentric rods,	4	8
,, lifting links,	1	10⅝
Diameter of motion pins,	0	1¾
,, eccentric sheaves,	1	4¼
Throw ,, ,,	0	3½

Reversing Gear.—The reversing is performed by means of a screw arrangement, firmly supported on the right-hand side of foot-plate, as shown by the drawings.

Coupling Rods.—These are of Bessemer steel of the form shown, with solid ends and syphons, and fitted with phosphor-bronze bushes. Each rod was forged solid in one length, and then finished bright.

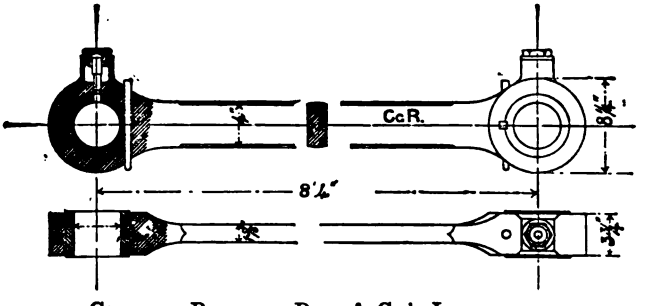

COUPLING RODS FOR DUBS & CO.'S LOCOMOTIVE.

Dimensions of Coupling Rods.

	Ft.	Ins.
Distance of centres,	8	4

Section of rod, 4¼ ins. by 1⅝ ins.

Coupling Rod Pins.—These are of wrought iron case-hardened, accurately turned to gauge, and exact duplicates of each other. They were turned to a taper of 1 in 50 and forced into the wheels by hydraulic pressure, the inner end being afterwards riveted over; the outside end of pin is fitted with a screwed washer and taper pin.

Dimensions of Coupling Rod Pins.

	Ft.	Ins.
Diameter of pin,	0	4
Length of bearing,	0	4

Bogie.—The bogie has four wheels of the form and dimensions shown on drawings.

The *frames* are of steel, raised as shown over the axles, the inner sides being planed all over, and the outer sides where any attachment is made.

The *carrying girders* are of the best Yorkshire angle iron bent round and securely riveted to the frames, and machined on the outer sides, clearances being made where required. Steel bearing plates planed and scraped to a

Digitized by Google

good working surface were riveted to the angle irons. The ends of the frames were stayed by flanged plates of BB Staffordshire iron placed vertically, and bolted to the frames by the horn block bolts. When finished the frames were adjusted perfectly true and square.

The *sliding block* bears on the steel plates and works between the angle irons, the side play being controlled by Timmis' unequal section steel springs. The bogie pin is of wrought iron, has a projection on it fitting into a corresponding hole in the horizontal plate under cylinders to which it was securely riveted, and the screwed end has a washer nut secured by a taper pin. The sliding block is of crucible cast steel, machined on all working and bearing parts, scraped to a good working surface on the sliding portions, and provided with fixed lubricators and oil grooves.

The *spring cradles* were made of the best Yorkshire iron, with wrought-iron saddle pieces at each end, shaped to bear on the axle boxes, and fitted with oil syphons.

The *spring shaft* is of the best Yorkshire iron passing through cast-iron bushes in the frames, with washer nuts and taper pins outside the spring buckles.

Dimensions of Bogie.

	Ft.	Ins.
Bogie wheel base,	5	9
Thickness of frames (finished),	0	$0\frac{7}{8}$
Depth at centre,	0	10
,, at horns,	1	$7\frac{1}{4}$
Length of frames,	7	$6\frac{1}{2}$
Distance between frames,	2	$7\frac{3}{4}$
Section of angle iron for carrying girders, 7 in. by $5\frac{1}{2}$ in. by 1 in.		
,, steel bearing plates, 6 in. by 3 in. by $\frac{1}{2}$ in.		
Length ,, ,,	2	$5\frac{1}{4}$
Thickness of end stays,	0	$0\frac{1}{2}$
Depth ,,	0	8
Total side play of bogie,	0	$1\frac{1}{2}$
Diameter of bogie pin,	0	$6\frac{1}{2}$
,, ,, at bottom end,	0	$2\frac{1}{2}$
Section of iron for spring cradles, 5 in. by 1 in.		
Diameter of spring shaft,	0	$2\frac{1}{8}$
Diameter of check springs unloaded,	0	$3\frac{15}{16}$
Length ,, ,,	0	10

Springs and Connections.—The springs are of the very best spring steel. Before being put in position each spring was fully tested until the camber was taken out, and the spring found afterwards to resume its original form.

The *bogie springs* are inverted, the buckles being connected direct to the shaft through the bogie frames; the ends of springs are connected to the spring cradles by hooks.

The *driving springs* are underhung, and the buckles are connected to the axle boxes by T-links as shown. The ends of the driving springs are connected to wrought-iron liners on the frames by adjustable links. The trailing springs are of Timmis' unequal section steel spring, two under each axle box, arranged in the manner shown on the drawings.

All the brackets, links, hooks, buckles, and pins connected with the springs are of the best Yorkshire iron, and the working surfaces were thoroughly case-hardened.

Digitized by Google

Dimensions of Springs

Bogie.	Ft.	Ins.	Driving.	Ft.	Ins.
Length loaded, ...	4	0	Length loaded, ...	3	4
Camber ,, ...	0	3	Camber ,, ...	0	3
Breadth of 14 plates, . . .	0	5	Breadth of 13 plates, . . .	0	4
Thickness, ...	0	0½	Thickness ,, . . .	0	0½

Axle Boxes.—The axle boxes are of the best gun-metal, lined with white metal of the same quality as the connecting-rod brasses and white metal, and fitted with cast-iron keeps and spring lubricating pads, and suitable covers.

Horn Blocks and Horn Stays.—The horn blocks are of crucible cast steel. The bogie horn blocks are fitted with cast-iron distance blocks and securing bolts. The driving and trailing horn blocks are solid, and provided with adjustable wedges and securing bolts. The horn blocks were accurately bedded to the frames, and secured by turned bolts to a driving fit. The horn stays are of wrought iron; care was taken that they fitted the horn blocks accurately.

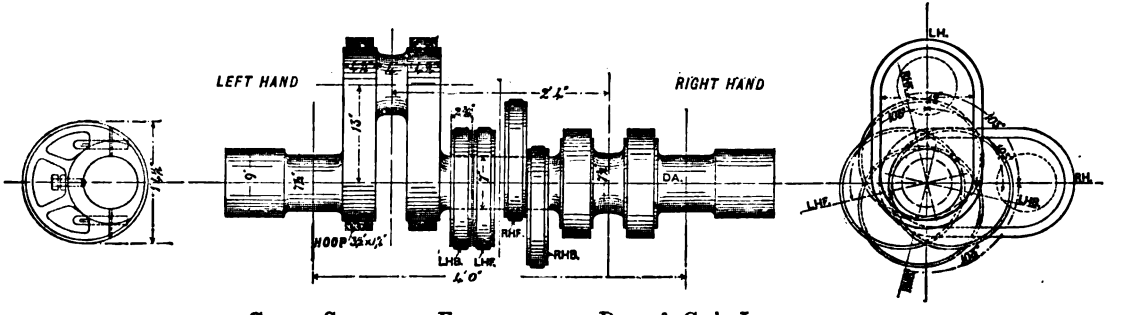

Crank Shaft and Eccentrics for Dubs & Co.'s Locomotive.

Axles.—These are of crucible cast steel of Vickers, Sons, & Co.'s make. The webs of crank axle are hooped; all corresponding parts being of an exact size and made to template, so that they may be interchangeable. The journals were in all cases turned from the solid; the wheel seats being accurately turned to a taper of 1 in 100.

Digitized by Google

Dimensions of Axles.

BOGIE AXLES.

	Ft.	Ins.
Diameter in middle,	0	5¾
,, on wheel seats,	0	7½
,, of journals,	0	6
Length ,,	0	9
Distance apart of centres of journals,	3	7

CRANK AXLES.

Diameter in middle,	0	7
,, on middle seats,	0	9
,, of journals,	0	7½
Length ,,	0	7½
Diameter of crank pin journals,	0	7¾
Distance apart of centres of cranks,	2	4
,, ,, journals,	4	0
Cross sections of crank arms, 12 in. by 4½ in., and 12 in., by 4½ in.		
Throw of cranks,	1	1

TRAILING AXLES.

Diameter in middle,	0	7
,, on wheel seats,	0	9
,, of journals,	0	7½
Length ,,	0	7½
Distance apart of centres of journals,	4	0

Wheels.—These are of wrought iron, of the best materials and workmanship, with solid rims, spokes, bosses, and balance weights. The spokes were forged with solid T-ends and welded in the centre. The surfaces of rims and spokes were shaped so that the wheels exactly balanced. Each wheel was bored taper and put on the axle (before the tyres were shrunk on) by hydraulic pressure of 60 tons, and then properly keyed on. Great care was taken that the keys fitted accurately.

Dimensions of Wheels.

BOGIE.

	Ft.	Ins.
Diameter on rim,	3	0
Width of rim,	0	4
Thickness of rim,	0	1⅛
Number of spokes, 10.		
Section of spokes at boss, 4 in. by 1⅛ in.		
,, rim, 3½ in. by 1¼ in.		
Diameter of boss,	1	4
Width of boss,	0	7
Diameter of hole in boss,	0	7½

DRIVING AND TRAILING.

Diameter on rim,	6	0
Width of rim,	0	4¼

Digitized by Google

	Ft.	Ins.
Thickness of rim,	0	$1\frac{3}{4}$
Number of spokes, 20.		
Section of spokes at boss, $4\frac{1}{2}$ in. by $1\frac{3}{4}$ in.		
,, rim, $3\frac{1}{2}$ in. by $1\frac{3}{8}$ in.		
Diameter of boss,	1	7
Width of boss,	0	$7\frac{1}{2}$
Diameter of hole in boss,	0	9
Centre of wheel to centre of coupling pin,	0	11

WHEEL CENTRES.

Trailing to driving,	8	4
Driving to centre of bogie,	9	10
Bogie wheel base,	5	9
Total wheel base of engine,	21	$0\frac{1}{2}$

Tyres.—These are of crucible cast steel, of Vickers, Sons, & Co.'s EXTRA manufacture, shrunk on, and fixed to the wheel by lips on the outside, and by a wrought-iron lip ring, to the L. C. D. R. standard section, on the inside.

Dimensions of Tyres.

BOGIE.

	Ft.	Ins.
Diameter on tread,	3	6
Width,	0	$5\frac{3}{8}$
Thickness (finished),	0	3
Distance between tyres,	4	$5\frac{7}{8}$

DRIVING AND TRAILING.

Diameter on tread,	6	6
Width,	0	$5\frac{1}{4}$
Thickness (finished),	0	3
Distance between tyres,	4	$5\frac{3}{8}$

Cab and Splashers.—The cab and splashers are made of best Staffordshire plate $\frac{3}{16}$ in. thick, the former was fitted with two plate glass windows in brass frames, and made to open.

All rivets were countersunk and filed smooth.

Dimensions of Cab.

	Ft.	Ins.
Width of cab,	6	6
Height at centre,	7	0

Sand Boxes.—These were of cast iron, four in number, and fitted with valves and substantial gear for working from foot-plate. The leading boxes are fixed to the splashers of driving wheels, and the valves are coupled together so as to work simultaneously.

Lagging.—The boiler and fire-box shell are lagged with well-seasoned pine, and covered with smooth iron sheets (14 B.W.G.), supported on a light wrought-iron frame, and secured by belts in the usual manner.

Brake.—The engine is fitted with a steam brake, arranged as shown on the drawings, cylinder 10 inches diameter. The brake shaft, hangers, brackets, rods, pins, crossbars and adjusting screws, are of the best scrap iron, the pins and working surfaces being thoroughly case-hardened.

Digitized by Google

A cast-iron brake-block was fitted to each wheel. A driver's brake valve is placed on the back of the fire box. The exhaust pipe is led into the ashpan.

Dome and Manhole Casings, &c.—These are of the form shown on drawings, of charcoal iron 14 B.W.G. thick, thoroughly well-finished. Brass moulding pieces are arranged round the back of smoke-box and fire-box casing.

Hand Rail and Lamp Irons.—A neat hand rail is provided round the boiler, supported by polished wrought-iron standards.

Lamp irons are fixed on the smoke-box, foot-plate, and fire-box casing.

Injectors.—Two brass injectors (Gresham and Craven's No. 8 pattern) are fixed on the ashpans in the position shown at, I, (below, B, the forward fire-bar bearer), on the side view of the folding plate.

Boiler Mountings, &c.—A brass seating is fitted on to fire-box casing, to carry two whistles and one pressure-gauge cock. Two injector steam valves, screwed into brass seatings, are fixed in the position shown on the fire-box casing, with spindles through the weather plate and brass hand wheels, inside cab. The injector valves have dry steam pipes led into manhole seating.

The *pressure gauge* is of Bourdon's pattern, with solid drawn tube to indicate from 1 to 200 lbs. per square inch.

A *blower* is fixed on right-hand side of smoke box, and worked from foot-plate, with dry steam pipe led into dome.

Two *glass water gauges*, with asbestos packed cocks, two clack boxes, a Furness lubricator to each cylinder, a displacement lubricator, oil boxes for axle boxes, and syphons for piston rods and spindles, lubricators for bogie sliding block, two feed water cocks and hose connections, an ashpan water cock, and a coal watering cock are fixed in the positions shown on the drawings.

Dimensions, &c., of Pipes.

	Diameter Inside.	Thickness B.W.G.
Main steam pipes in boiler and smoke box, . . .	4½ ins.	7
Injector suction pipes, ...	1¾ ,,	10
,, delivery pipes, ...	1½ ,,	10
,, valve dry steam pipes, ...	1¼ ,,	10
,, steam pipes, ...	1½ ,,	10
Blower pipe in smoke box (copper solid drawn), .	⅝ ,,	12
Furness lubricator pipes in smoke box (copper solid drawn),	⅜ ,,	11
Oil pipes, ...	⅜ ,,	15
Pressure-gauge pipe (copper solid drawn), . . .	5/16 ,,	15

Giffard's Injector.—Injectors are chiefly used for locomotives, these being seldom fitted with feed pumps in modern practice, but they are also largely used for land boilers. They will draw water from 2 feet to 12 feet according to size, but the water supply must be continuous and must not be hotter than 135° Fah. for low pressures, and 105° Fah. for the highest pressures. If these temperatures are exceeded, so much water is required to condense the steam that the velocity of the steam is too much reduced in driving forward the large volume of water. The injector illustrated on the following page, is the form in most general use

Digitized by Google

for all purposes, as made by Messrs. Sharp, Stewart, & Co., Manchester, but a number of patent forms are also made by different firms, which are adapted for special purposes.

Steam from the boiler enters the uppermost branch pipe, and is admitted to the injector through a conical nozzle. The admission of the steam is regulated by a vertical spindle, the lower end of which fits accurately into the nozzle, and this spindle may be screwed up and down by the small hand wheel shown at the top of the diagram. The water with which the boiler is to be fed enters the injector on the opposite side from the steam, and through a branch a little below the steam pipe branch. It passes round the outside of the conical nozzle through which the steam rushes, and the supply is regulated by a hand wheel at the side, which works a small pinion inside the injector, and moves a tube up and down. The branch pipe below [redacted]ater entrance [redacted]the overflow,

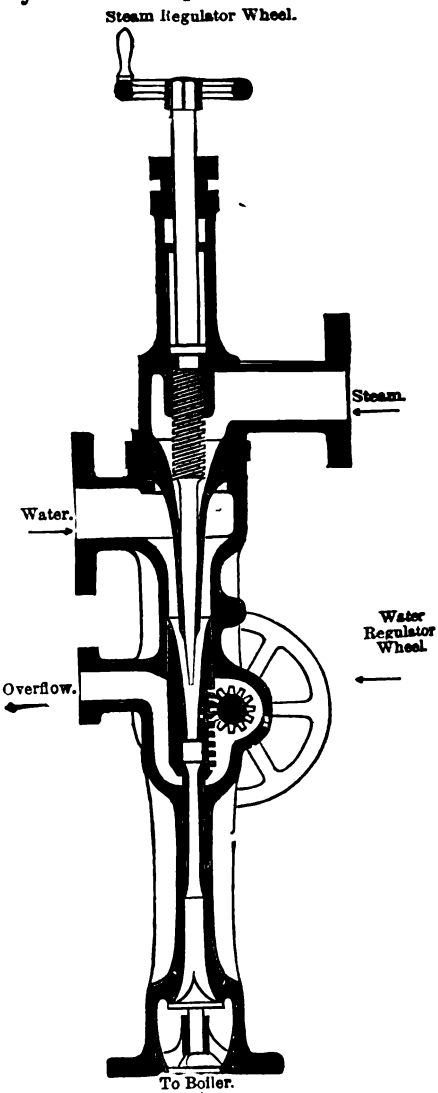

GIFFARD'S INJECTOR

Digitized by Google

and the bottom of the injector, which is fitted with a back pressure valve, communicates with the check valve on the side of the boiler. By admitting steam and water by their respective branches, the steam is able to drive the water into the boiler against a pressure which is equal to, or it may be greater than its own. This statement at first sight may seem paradoxical, but it is nevertheless the case, and the explanation is as follows. The velocity of an issuing jet of steam is many times greater than that of a jet of water issuing under the same pressure, and if steam, while issuing from a boiler, be condensed to water, but not reduced in velocity to that of water issuing under the same pressure, it is then capable of overcoming the pressure of the water in its own boiler. This is exactly what takes place in the Giffard's injector. The steam enters the injector, and, passing down the conical nozzle, is condensed on coming into contact with the feed water, without losing its velocity, further than that due to the friction of the passages. The vacuum formed in the injector by the condensation of the steam causes more water to rush into the injector, and this feed water is carried on by the force of the condensed steam jet into the boiler. The velocity of the steam jet is of course reduced by imparting a high velocity to this volume of water, but it is not reduced nearly so low as that of a jet of water issuing under the same pressure, and hence it is able to overpower and drive back the water in the boiler.

The injector is lighter, takes up less room, is quite as certain in its action, and absorbs less power than a feed-pump, for it is only in action when required; besides which you can always know when it is working satisfactorily, by watching the overflow and the vibration caused by the passing steam and water through the feed-pipes.

Compound Locomotives.—Previous to 1879 M. Mallet compounded a locomotive for the Bayonne and Biarritz Railway, and—

In 1881, Mr. Webb constructed the "*Experiment*," a compound locomotive for the London and North-Western Railway, which made a daily run of 319 miles for more than a year, with the Scotch and Irish limited mails between London and Crewe. The two high-pressure cylinders are 13 inches diameter, while the low pressure one is 26 inches, and is placed centrally between them, the stroke in each case being 24 inches. During the time the engine was working on the above section, Mr. Webb states that the average consumption per train mile was only 26·6 lbs. of coal compared with 34·6 lbs. for the standard four-wheels, coupled passenger engines having two 17 inch cylinders with 24 inch

Digitized by Google

stroke doing precisely the same class of work, and with the same boiler pressure. Since then, Mr. Webb has built several compound engines for the London and North-Western Railway.

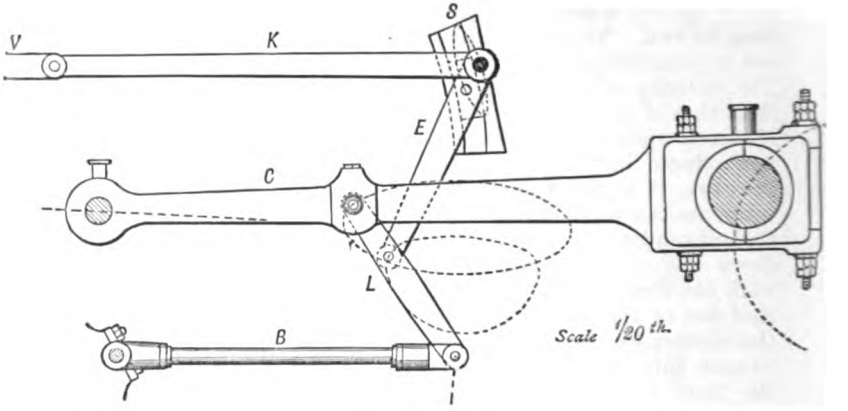

JOY'S VALVE GEAR AS FITTED TO WEBB'S COMPOUND LOCOMOTIVE.

See Lecture XX. for description of Joy's Valve Gear.

One of these beautifully finished engines was shown at the "Inventions" Exhibition, South Kensington, last year, and attracted considerable attention. Many letters on the subject appeared during 1885 in "*The Engineer*" and "*Engineering*" on this subject, and widely differing opinions were expressed by engineers as to whether any real saving, on the whole (first cost, working, and upkeep), is effected in the case of fast-speed passenger engines, but generally it was allowed that in the case of goods engines there might be an advantage on the whole by using them.

Such radical changes as those proposed by Mr. Webb are slower in taking general effect (even if they were proved beneficial on the whole), in the case of locomotives than of steamers, because Railway Companies find that a considerable saving in working and in repairs is effected by having their engines as far as possible of one type, and with the various parts interchangeable, at least those doing the same class of work, while a Steam-shipping Company may have every one of its steamers fitted with different styles and sizes of engines without any apparent loss; consequently, the spirit of invention and improvement has of late been much more rife in connection with the latter than the

Digitized by Google

former. When we think, however, of the many millions of miles run each year by locomotives in this country alone, and that the

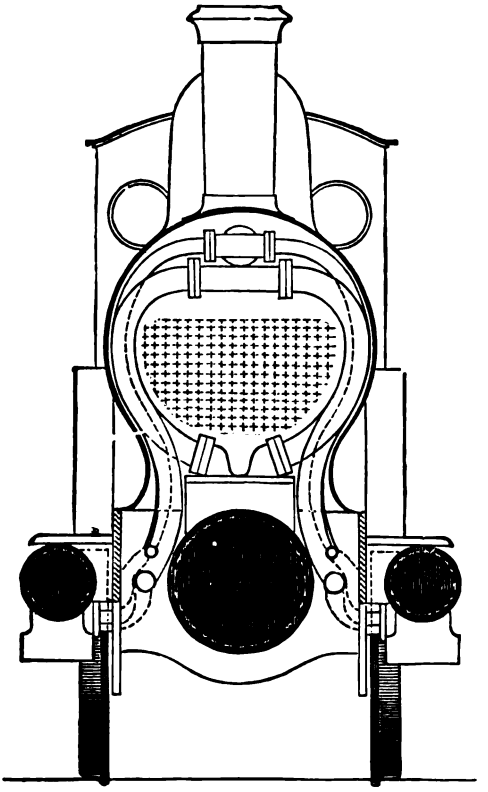

CROSS-SECTION THROUGH SMOKE-BOX—WEBB'S COMPOUND LOCOMOTIVE.

general introduction of a well-designed compound locomotive would enable several pounds of coal to be saved per mile, we are prone to believe that in time it will become generally adopted.

Digitized by Google

LECTURE XXX.—QUESTIONS.

1. Sketch a section through the cylinder of a locomotive engine, showing the piston, ports, slide valve, glands, guide bars, piston-rod, and crosshead. Describe the whole by a complete index of parts, and specification, in your own words.

2. The piston-rod of a locomotive is guided by parallel bars; which bar is pressed upon when the engine is going forward and which when reversed? Make a sketch and explain by arrows the directions in which the forces act.

3. Sketch that end of a connecting-rod which is attached to the crank axle of a locomotive engine. Describe its construction, and show the method of lubricating the bearing.

4. What is the speed of the piston of a locomotive with 24 inches stroke, 7 ft. driving wheels, and running at 40 miles per hour? *Ans.* 640 ft. per min.

5. If the cylinder of a locomotive be 20 inches in diameter, with a stroke of 2 feet, and the diameter of the driving wheel be 6 feet, find the tractive force exerted by the engine for each pound of pressure per square inch on the piston. *Ans.* 104·72 lbs.

6. Draw a section through the cylinder and valve chest of a locomotive engine, and show some method of working the engine with varying grades of expansion.

7. When the reversing lever or screw gear of a locomotive is moved towards the central position, after being pulled over, the power of the engine is diminished. Why is this?

8. Describe, with sketch and an index of parts, the steam regulator, valve rod and handle, for a locomotive engine. State the conditions essential for the successful working of a regulator valve in a locomotive engine.

9. Sketch and describe Ramsbottom's safety valve. Sketch also an ordinary safety valve with Salter's spring balance. Mention the respective advantages of each.

10. Draw in section a feed pump with its valves, as fitted to a locomotive engine. What contrivance may be used instead of a feed pump? State generally the nature of its action.

11. Describe, with a sectional longitudinal sketch, Giffard's injector, and explain the manner in which it acts. What are the advantages of this apparatus as compared with an ordinary feed pump?

12. Sketch a section through the fire-box of a locomotive boiler, showing particularly the method of supporting the flat surfaces, and explain your drawing by an explanatory index of parts.

13. Confining your answer to a locomotive boiler, you are required to sketch the necessary valves attached to the same, and to describe their construction and mode of action.

14. Sketch a section through the entire length of a locomotive boiler, showing the fire-box and smoke-box. Mark the positions of the safety valve and regulator valve. Explain Stephenson's method of obtaining a draught by the action of the exhaust steam as applied in the Rocket engine.

15. Sketch a transverse vertical section through the smoke-box and funnel of a locomotive engine with inside cylinders, and show one cylinder, the steam pipe, valve-box, and blast pipe. Explain the production of the draught by the discharge of exhaust steam. What do you understand by an "induced current of air?" How may it be set up in an open tube? What is the "puggie," and for what purpose is it used?

Digitized by Google

16. Of what use is a "bogie" to a locomotive? Sketch and explain any form of bogie with which you may be familiar, showing how it is attached to the locomotive.

17. Sketch a section through the axle-box of the driving axle of a locomotive, and show a method of connecting the box by springs with the frame. Calling A B and C D the springs for the driving and hind wheels, examine the effect of connecting the points B and C with a lever having equal arms and centred on a pin fixed to the frame.

18. Draw in section the steam passages and ports of a locomotive cylinder with the slide valve. The length of stroke is given, and also the width of steam port, together with the points of cut-off and compression, and the valve is splitting for steam at the beginning of the stroke. Make a diagram showing the relative positions of the crank-pin and centre of the eccentric pulley at the times, (1) when steam enters the cylinder, (2) when it is cut off, (3) when compression begins. In what manner are the width of the port, the lap of the valve, and the throw of the eccentric, related together.

19. Give a freehand sketch of the longitudinal and cross sections, as well as front and back outside views, and a half sectional plan of a locomotive boiler and engine, showing the method of staying the different parts. Arrange the complete boiler and engine mountings in their proper places. Give a complete index to the various parts in your drawing, with any concise explanations that may appear necessary.

20. Give a general idea of the difference between an ordinary and a compound locomotive engine. Is the latter likely to be soon adopted as the regular working locomotive? If so, why? If not, why not?

21. What are the advantages of making engines for similar purposes (such as one class Locomotives for the same Railway Company) of exactly the same construction and size?

22. Sketch a section of, and explain the method of fitting, a safety-valve to a locomotive boiler. The safety-valve is 5 inches in diameter, and the bearing surfaces are inclined at 45° to the axis of the valve. What should be the lift, in order that the available opening for the escape of steam may be ·7 of a square inch? *Ans.* 0·6 inch.

23. Sketch a longitudinal section through a Giffard's injector, showing clearly the manner in which the flow of steam and water is regulated. Explain the principle of its action, and account for the apparently paradoxical result. (*Adv. S. and A. Exam.*, 1888.)

24. Sketch and describe a steam regulator valve as applied to a locomotive boiler, and show that by means of it the steam may be admitted gradually to the cylinders. Sketch roughly the position of the valve in the boiler. (*Adv. S. and A. Exam.*, 1888.)

25. Make a clear sketch of Joy's valve gear as applied to a locomotive or other engine, and explain the manner in which the reversal of the engine is effected. Why does the lead remain constant throughout? (*Honours S. and A. Exam.*, 1889.)

26. Describe, with sketches, the arrangement of cylinders in some form of compound locomotive engine. Sketch also a section through the Trick or Allen valve for a high-pressure cylinder, and explain its action. How are the reversing gears arranged? (*Honours S. and A. Exam.*, 1889.)

27. *During the summer holidays* make out a complete set of working and finished drawings to a scale of 1½ inches to the foot of Messrs. Dubs & Co.'s locomotive from the specifications and drawings given in this Lecture.

Digitized by Google

APPENDIX I.

MISCELLANEOUS QUESTIONS FROM THE SCIENCE AND ART DEPARTMENT'S AND THE CITY GUILDS OF LONDON INSTITUTE'S EXAMINATIONS, NOT INCLUDED AT THE END OF THE LECTURES. (*See new questions at end.*)

ELEMENTARY STAGE.

1. Make an outline sketch of a section of a steam engine of the beam construction, showing, in their relative positions, the following parts only:—(1) The steam cylinder, piston, and piston-rod; (2) the parallel motion; (3) the beam; (4) the connecting-rod and the crank. *See Lecture II.*, pp. 13 and 17.

Valves.

2. Sketch a section through a Cornish double-beat or Crown valve, and explain the principle of its construction, stating its advantages over an ordinary disc valve.

3. Point out some method of rendering a steam valve "balanced." Sketch a balanced as well as an unbalanced valve.

4. Describe a double-beat or equilibrium steam-stop valve. The upper side of the valve is 11 inches in diameter and the lower side 10¼ inches, what force will be required to open it when the steam has a pressure of 100 lbs. above the atmosphere, the pressure between the valves being disregarded? *Ans.*

5. Supposing that drop valves are substituted for the slide valve in the double-acting engine, how many would be required? Make a sketch, showing their position, together with the steam and exhaust passages. How are drop valves worked? Sketch the contrivance.

6. Sketch an ordinary lever safety valve as applied to a land boiler. The diameter of a valve is 3¾ inch; the leverage is 11 to 1. Find the pull on the end of the lever when the steam pressure is 30 lbs. above the atmosphere? *Ans.* 30·1 lbs.

7. Required the weight to be placed on the end of a safety-valve lever 17¼ inches long, the distance from the fulcrum to the valve being 3½ inches, the upward pressure on the valve required for lifting the valve and lever being 20 lbs., and the pressure of steam in the boiler being 100 lbs. per square inch above that of the atmosphere? *Ans.* (20 A − 4) where A = area of valve in square inches.

Governors.

8. Sketch an ordinary Watt's governor, and explain its action upon the valve with which it is connected. Why is it an improvement to shift the points of suspension so that the arms cross each other? *See Lecture II.*, pp. 15 and 17.

9. What objection is there to regulating the speed of an engine by the throttle valve?

Digitized by Google

Donkey Engine.

10. Sketch a section of a neat form of donkey engine, such as would be employed for feeding a marine boiler, and describe its action very briefly.

Gauges.

11. Describe a mercurial pressure gauge for indicating the pressure in a boiler. If the specific gravity of mercury be 13·5, how much higher will the mercury stand in one leg than the other when the pressure of steam is 10 lbs. on the sq. in. above atmospheric pressure? *Ans.* 20·5 ins.

12. Explain Bourdon's gauge for ascertaining the pressure of steam in a boiler.

13. Describe, with a sketch, the construction and action of any gauge for indicating the amount of vacuum in the condenser of a steam engine.

14. Describe any apparatus for indicating the height of the water in a land boiler, with sketch and reference table.

Feed Pump.

15. Sketch a section through the feed pump of a locomotive engine. Show its connection with the tender, and state the means by which the driver ascertains whether or not he is feeding the boiler with water.

ADVANCED STAGE.

1. Make an outline sectional sketch of a condensing double-acting beam engine. Attach names to each part, or reference letters and explanatory index of parts, so that the drawing may show that you understand the action and construction of the machine.

Valves.

2. Explain the mechanism for opening the steam valve in a single-acting Cornish engine. Show the contrivance adopted for regulating the point of cut-off.

3. A double-acting condensing engine is to have four valves connected with the cylinder—viz., two steam and two exhaust valves. You are required to show the manner in which the valves, ports, and steam passages may be disposed, so as to pass the steam alternately into the cylinder and out to the condenser.

4. Sketch a section through the cylinder and valves of a beam engine fitted with drop valves. How are the valves moved so as to give the effects of lead, expansion, and cushioning?

5. Sketch in section a Cornish double-beat or crown valve. Account on mechanical principles for the balancing of the fluid pressure on the curved surface of the valve.

6. Describe, with a sketch, a double-beat valve, and explain its action. The internal edge of the seat of a conical valve is 5 inches in diameter, the vertical angle of the cone being 90°, what lift of the valve would give 1 square inch area of opening? *Ans.*

7. Describe, with sketches, the construction of (1) a *throttle* valve, (2) a *double-beat* valve (3) a *gridiron* valve, and point out the mechanical purpose fulfilled by each species of valve.

Digitized by Google

8. Sketch in section a steam stop-valve for allowing steam to pass from a marine boiler to the engine, and mention some details of construction whereby the due action of the valve is ensured.

Governors.

9. Sketch the ordinary pendulum or ball governor of a steam engine. Mark on your drawing some particular line whose length is related to the number of revolutions of the balls. State the relation as nearly as you know it. If the line referred to be shortened in proportion of 2 : 3, how much would the number of revolutions be increased? *Ans.* 9 : 4.

10. What objection is there to wire drawing as a method of regulation in steam engines?

11. The governor and fly-wheel of an engine have both the purpose of regulating its speed. Explain how their actions in this respect differ.

Parallel Motion.

12. Explain the principle of Watt's parallel motion, and describe the parallel motion of a beam engine.

13. Explain the method of constructing a parallel motion for a compound cylinder beam engine.

Engine Details.

14. Sketch a piston-rod, stuffing-box, and gland, saying whether you intend the arrangement for a vertical or horizontal engine. Assume the diameter of the rod to be 4½ inches, and mark on your sketch the other leading dimensions.

15. What are the chief parts of a steam engine which require "packing?" Describe the most satisfactory method you know of accomplishing this.

16. Explain the method of reversing an engine by a loose eccentric. Sketch the eccentric as fitted to the shaft.

Gauges.

17. Sketch and describe some form of "sight feed" lubricator for the cylinder of a steam engine.

18. How is a barometer gauge made and fitted to a condenser? If the mercury in an ordinary barometer stands at 30 inches when that in the gauge stands at 26 inches, find the pressure per square inch of the vapour or air in the condenser. *Ans.* 1·96 lbs.

19. Sketch and describe fully, by an index of parts, the construction and action of Bourdon's pressure and vacuum gauges.

Steam Engine.

20. A single-cylinder double-acting condensing engine, unjacketed, but very efficiently lagged with non-conducting material, has a cylinder diameter of 67⅝ inches and stroke 81½ inches, and runs 40 revolutions per minute. The initial absolute pressure is 75 lbs. per square inch, and the mean absolute back pressure 2·8 lbs. per square inch. The cut off is at ¼ of the stroke, and the effect of clearance is to be neglected in your calculation. Draw as accurately as you can the probable indicator diagram, and calculate the indicated horse-power. *Ans.* 2,137 H.P.

Digitized by Google

21. A steam engine is employed to work two pumps alternately, giving out its full power in each case. The area of the plunger of the one pump is A, and it lifts water 50 feet, the travel of the plunger being x feet. Whereas the plunger of the second pump traverses $\frac{2x}{3}$ feet at each stroke, and lifts water 150 feet, what should be its area? *Ans.* ·5 of A.

22. If the boiler of an engine gives out every minute 100 cubic feet of steam which propels the piston with an average pressure of 50 lbs. on the square inch, what is the horse-power of the engine? *Ans.* 21·8.

Boilers.

23. Sketch any form of boiler furnace, naming the various parts. State in what ways fuel is wasted, and what precautions must be taken to effect its economy.

24. What is combustion? What occurs in the furnace and flues of any boiler that you are well acquainted with?

HONOURS STAGE.

Admission Valves, Eccentrics, &c.

1. Explain, with sketches, the method of regulating the opening and closing of the steam valve of a single-acting pumping engine.

2. In a slide valve the travel is $4\frac{1}{2}$ inches, lap 1 inch, lead $\frac{5}{16}$ inch; draw the suppositious indicator diagram.

3. A slide valve has to cut off steam at $\frac{3}{4}$ of the stroke, and its opening for steam is to be $1\frac{1}{4}$ inches. The lead of the valve is to be $\frac{1}{4}$ inch. Find the stroke of the valve, and the angular advance of the eccentric. (You may neglect the obliquity of the connecting-rod, but state in general terms what its effect would be.) *Ans.*

4. Describe the operation of setting the slide valve in any type of engine with which you are best acquainted.

5. In a single slide valve gear, if the travel of slide is 4·6 inches, and the angle of advance 30°, and if admission of steam takes place while the piston travels 0·8 of its stroke, and exhaustion of steam begins when the piston has still 0·04 of its stroke to travel, it is required to find inside and outside lap and lead, and maximum opening of ports. *Ans.*

6. In an engine the stroke is 4 feet, connecting-rod 9 feet; the valves are so arranged as to cut off the steam when the crank has turned through an angle of 45° from the dead points in both the forward and backward stroke; find at what point of the stroke the steam will be cut off in the two cases. *Ans.*

7. The faces of the slide valve and seat are frequently machined only and not scraped, with the idea that they rapidly wear together to a good steam-tight fit. In what class of engines is this practice most justifiable, and how is it to be reconciled with the fact that face-plates are never now finished by grinding one on another? Explain the general effects on the steam efficiency of leakage past the valve faces and past the piston, following out your explanation for the different periods of the stroke. Sketch one style of design for steam piston packing rings, and explain all the points of exact workmanship required in its construction.

8. Describe a valve motion for reversing an engine where a single

Digitized by Google

eccentric is keyed to the shaft. This question refers to Hackworth's valve gear, or others of the same character.

9. Sketch a link motion, or any form of reversing gear with which you are familiar (the sketch not to be detailed in any way), and describe its action on the steam distribution.

10. Describe by sketches the arrangements of valves by which the proper proportions, air and gas, are admitted to, and the waste products discharged from, the cylinder of an Otto silent, or a Clerk's gas engine.

Governors.

11. Sketch the pendulum governor as Watt made it. From the balls of a common governor, whose collective weight is, A, there is hung by a pair of links (of lengths equal to the ball-rods) a load, B, capable of sliding up and down the spindle. Compare the loaded and common governor as regards sensitiveness, the weights of the arms or links being neglected.

12. Explain the principle of *Watt's* pendulum governor, and state its advantages and defects. Various methods have been proposed for improving this form of governor; discuss the action of any such modern apparatus with which you are acquainted.

13. What are the principal essentials of a good steam engine governor? Sketch, in outline, any one form of governor with which you are acquainted, and explain to what extent it is satisfactory according to the conditions which you have laid down, or how it might be improved.

Parallel and Straight Line Motions.

14. The stroke of a beam engine is 8 feet, beam 24 feet, connecting-rod 24 feet, stroke of air pump $4\frac{1}{2}$ feet, and length of front and back links of parallel motion 4 feet; find proper lengths of radius-rods, and point where air-pump rod should be attached. Find also proper position of cylinder, and error of the parallel motion when its axis is 12 feet distant from beam centre. *Ans.*

15. State the conditions for a straight line motion discovered by Peaucellier, and prove that the line obtained is an exact straight line.

16. Explain and prove the truth of Peaucellier's method of obtaining a straight line motion. Arrange the dimensions of an instrument for giving a straight line path of 12 inches.

Speed and Energy Stored.

17. The stroke of a piston is 4 feet, connecting-rod 9 feet; find position of crank when piston has completed first quarter of backward and forward stroke respectively; find also velocity of piston in the two cases, and its maximum speed when the engine is making 70 revolutions per minute. *Ans.* 730, 810, and 900 feet per minute.

18. The driving wheels of a locomotive are 6 feet diameter; find revolutions per minute, and angular velocity in radians per second when the locomotive is running at 50 miles an hour, and if the stroke is 2 feet find mean speed of piston in feet per minute. Describe, with a sketch, Ramsbottom's method of supplying the tender of a locomotive with water while running. In what way can you calculate the speed of the train in order that water may be lifted into the tender? *Ans.* 233·5; 24·45; 934.

19. The pressure equivalent to the weight of the reciprocating parts of an engine is 4 lbs. per square inch, and the stroke 4 feet; find maximum pressure equivalent to inertia of parts when the engine is making 75 revolu-

Digitized by Google

tions per minute. Find also the number of revolutions necessary to produce a shock near commencement of stroke when initial steam-pressure is 30 lbs., and show that in this case, if the cut-off is less than $\frac{1}{3}$, a shock will also be experienced at other parts of the stroke. *Ans.* 15·3 lbs.; 124 revolutions.

20. How would you experimentally or by calculation find the capacity of a fly-wheel for storing energy, so that you could say how many foot-pounds of work it would do in altering from one speed to another? How do fly-wheels made to the same drawing and of the same materials, but to different scales, differ in their capacity to store energy?

21. How would you determine the diameter and weight of a fly-wheel for a steam engine? Take as an example an engine of 50 H.P., the main shaft making 70 revolutions per minute.

Dimensions and Power of Engines, &c.

22. Given the diameter and stroke of a steam engine, and the maximum pressure on the piston, how would you find approximately:—

(i.) The diameter of the piston-rod?
(ii.) The diameter of the connecting-rod?
(iii.) The diameter of the crank-shaft?

(If you prefer to work with figures you may assume the cylinder to have 20 inches diameter and 30 inches stroke, and the steam-pressure to be 60 lbs. per square inch.) *Ans.*

23. Give a good rule for the thickness of the wall of a steam engine cylinder, and explain why the rule should be followed. Reduce it numerically for the average pressures occurring (1) in factory engines, (2) in marine engines, (3) in locomotives. Explain two reasons why the piston-rod must be proportioned so as to have a specially low average stress on its cross-section. What two considerations should govern the design of the diameter and spacing of the cylinder cover bolts?

24. Select any part of any kind of steam engine about which you know most: describe with sketches all the processes of its manufacture; give the theory of its action and how the work succeeds in practice.

25. A single cylinder double-acting condensing engine, unjacketed but very efficiently lagged, is to exert 2,000 horse-power at 40 revolutions per minute, and cut off one-fifth of the stroke. The initial absolute pressure is to be 75 lbs. per square inch, and mean absolute back pressure 2·8 lbs. per square inch. The stroke is to be one and one-fifth times the cylinder diameter. The temperature of the feed water is to be 110° Fahr. Calculate the required diameter of cylinder and stroke, and also the steam efficiency, *i.e.*, the ratio of work done by steam to heat energy supplied to the water in the boiler. In the calculation the effects of clearance-space and of loss of heat by radiation and conduction from boiler, steam-pipes and engine, and by blowing off steam from safety-valve, &c., &c., are to be neglected. *Ans.*

Theory of Heat and Work, Expansion Curves.

26. Explain the meaning of *latent heat*. State Watt's law as to the latent heat of steam formed under different pressures, and point out the correction of this law as established by Regnault.

27. Define a unit of heat, and explain the principle according to which the efficiency of a heat engine is measured. Trace what happens in the working of an engine when the cylinder is not provided with a steam jacket.

28. Find an expression for the work done by the steam in one stroke of an engine when expanding, according to Boyle's law, clearance being taken

Digitized by Google

into consideration. Show that the general effect of clearance is to raise the expansion curve.

29. Having regard to the theory of heat, will you state some reasons for concluding that when steam expands in a cylinder behind a working piston, the law of expansion differs from that of Boyle? Find the true expansion curve of air in a theoretical heat engine.

30. What work is done per cubic foot of steam in an engine, initial pressure 70 lbs. per square inch, cut off at $\frac{1}{4}$ of the stroke, back pressure $1\frac{1}{2}$ lbs. per square inch, the cylinder being steam-jacketed? *Ans.*

31. What work is done by 1 lb. of steam, initial pressure 36 lbs. per square inch, cut off $\frac{1}{4}$ of the stroke, back pressure $2\frac{1}{2}$ lbs. per square inch, the cylinder being steam-jacketed. One pound of saturated steam at 36 lbs. fills 11 cubic feet. *Ans.* 129,000 ft.-lbs.

32. In a compound cylinder engine the steam pressure is maintained at a uniform pressure, P, in the smaller cylinder A, but exhausts from, A, into the larger cylinder, B, the pistons, A and B, being attached to the same rod. Find an expression for the work done in one stroke.

33. Explain, by reference to the theory of heat, the reasons for the diminished consumption of fuel in marine engines by employing steam at a high-pressure with surface instead of jet condensers.

34. Explain why the whole energy due to the combustion of fuel can never be transformed into mechanical work by means of a heat engine, and state what conditions limit the efficiency of a so-called perfect heat engine.

35. What are the conditions which limit the efficiency of heat engines? A perfect heat engine receives heat at a temperature of 450° F., and rejects heat at a temperature of 100° F. Find its efficiency. Prove the formula which you employ. *Ans.*

36. A mass of air at atmospheric pressure is compressed by the action of an engine and is heated thereby. It is afterwards cooled down to its original temperature before compression, and is then expanded while doing work. When it again arrives at the pressure of the atmosphere it is intensely cold and may be used for refrigerating purposes. Explain these results according to the principles of Thermodynamics. Why is it an advantage to cause the air to do work while expanding?

37. In a refrigerating engine, atmospheric air is compressed and subsequently cooled; it is then allowed to expand and do work whereby its temperature is greatly reduced. Give the theory of the process, and find how much the temperature of a given mass of air is raised by a given amount of compression in a vessel impervious to heat.

38. Distinguish between an isothermal and an adiabatic curve. Find the equation to the adiabatic curve for air.

39. What is meant by the adiabatic expansion of a gas? Find the equation for the adiabatic expansion of air. If you were required to set out approximately the curve of adiabatic expansion of steam, how would you proceed?

40. Describe experimental methods of ascertaining the vapour tension of a liquid at high and low temperatures respectively. Draw the isothermal line for steam at a given temperature, and account for this line becoming horizontal at a particular point.

41. Investigate a method of ascertaining the absolute temperature which corresponds to 150° C.

42. How does the efficiency of any kind of boiler depend on the relation between the fuel burnt per square foot of grate and the number of square feet of heating service per square foot of grate?

Digitized by Google

Miscellaneous.—Honours Questions.

These numbers are a guide to where the Questions fit into Appendix I.

5*a*. In a steam engine the cut-off takes place at ·7 of the stroke, the angle of lead is 6° 9′, the width of the steam port is $1\frac{1}{2}$ inches, and the steam port opens $\frac{17}{24}$ of its area. Find by Zeuner's diagram (neglecting obliquity) the travel of the slide, the angle of advance, the outside lap and the outside lead. What would be the amount of inside lap necessary to produce cushioning after $\frac{6}{7}$ of the stroke has been performed? (*S. and A. Hon. Exam.*, 1888.)

cos 66° 25′ = ·4
cos 59° 52′ = ·502

8*a*. Describe a form of reversing gear for a slide valve where a single fixed eccentric replaces the double eccentric and link. Explain the manner in which the arrangement acts and how it becomes effective in reversing the engine. (*S. and A. Hon. Exam.*, 1888.)

10*a*. It is required to design expansion gear for an engine so as to obtain various grades of expansion while the engine is at work. What valve or valves and valve-gear will you employ for this purpose? Make full sketches to illustrate your answer. (*S. and A. Hon. Exam.*, 1888.)

19*a*. A normal indicator diagram of an expansive engine being given, show the method of plotting out the curve of crank effort. How is the curve affected by taking into consideration the inertia of the reciprocating parts? (*S. and A. Hon. Exam.*, 1888.)

27*a*. Write down Regnault's formula for the total heat of formation of steam at a given temperature, adopting Fahrenheit's scale. It being observed that in a double-acting engine making 24 revolutions per minute, and indicating 125 H.P., the temperature of the steam in the boiler is 308° F., while that of the feed water is 75° F., the amount of dry steam passing into the cylinder per stroke is ·6 lbs., the amount of priming water ·025 lbs., and the amount of steam condensed in the jacket for each stroke is ·09 lbs., calculate the efficiency of the engine. Neglect any variation in the specific heat of water. (*S. and A. Hon. Exam.*, 1887.)

32*a*. Point out some of the principal theoretical and practical considerations which have caused engineers to adopt compound engines in place of employing expansion in a single cylinder. Account for the economy of fuel resulting from the use of triple-expansion engines. (*S. and A. Hon. Exam.*, 1888.)

35*a*. Prove the formula for the efficiency of a perfect heat engine working between certain fixed limits of temperature. Under what conditions would a perfect engine be capable of converting into work the whole of the heat existing in a substance? (*S. and A. Hon. Exam.*, 1888.)

35*b*. Investigate an expression for the efficiency of a heat engine working in a reversible cycle. Give an example of a cycle which is not reversible. (*S. and A. Hon. Exam.*, 1887.)

43. A boiler makes steam containing 10 per cent. of suspended moisture; 100 lbs. of feed water are introduced at 100° F., and are raised into steam at 320° F. (pressure of 90 lbs. to the square inch), how much water at 212° F. could be converted into saturated steam at 212° F. by the same consumption of fuel? (*S. and A. Hon. Exam.*, 1888.)

44. Make a sketch showing the construction of Giffard's injector, and explain the action of the injector. If the volume of 1 lb. of steam in a boiler be 3·6 cubic feet, and the volume of 1 lb. of water be ·016 cubic feet, compare the velocities with which steam and water would respectively issue from the boiler, and infer the kinetic energies of steam and water issuing under these conditions in the same time from equal orifices in the boiler. (*S. and A. Hon. Exam.*, 1887.)

Digitized by Google

10*b*. Describe, with sketches, Meyer's variable expansion valve. In an engine fitted therewith the steam is cut off by the main or distribution valve at $\frac{7}{8}$ of the stroke, the valve having a lead of $\frac{3}{32}$ inch, and the travel of the valve being 5 inches. Find the angle of advance, travel, and lap of the main valve. Set out and explain a diagram giving the relative motion of the main and expansion valves. (*S. and A. Hon. Exam.*, 1889.)

12*a* (For Lecture XIII.) The travel of a slide valve is $5\frac{1}{4}$ inches, the outside lap $1\frac{1}{2}$ inches, the lead $\frac{3}{16}$ inch, and the exhaust lap $\frac{1}{4}$ inch, also the cut-off is at $\frac{3}{8}$ of the stroke; determine the angle of advance of the eccentric, and give the maximum openings for steam and exhaust, assuming that the steam ports are $2\frac{1}{4}$ inches wide. (*Adv. S. and A. Exam.*, 1889.)

13*a* (For Lecture XIII.) Sketch a section through the eccentric, slide valve, and ports of a horizontal high-pressure steam engine, working with a flat-faced locomotive D valve, *without lead*, and cutting off steam at ·5 of the stroke. What alteration should be effected in order that the steam may be cut off when the piston has completed ·7 of its stroke, there still being no lead? (*Adv. S. and A. Exam.*, 1889.)

35*b* (See Cotterill, &c.) Investigate fully the conditions under which a heat engine working between given temperatures shall perform the greatest amount of work possible. What are the obstacles met with in the endeavour to fulfil these conditions in a steam engine? (*S. and A. Hon. Exam.*, 1889.)

39*a* (See Lectures XII. and XIV. and Cotterill, &c.) What physical law is expressed by the formulæ $pv = Rt$. Given $R = 53{\cdot}2$ foot pounds in the case of air; find its value for superheated steam, whose density as compared with air is ·622, and deduce the numerical value of the exponent in the equation to the curve for the adiabatic expansion of superheated steam. (*S. and A. Hon. Exam.*, 1889.)

Gas Engines.

1. Compare the methods of working adopted in the Lenoir and Otto gas engines. Sketch and explain the forms of indicator diagram, exhibiting the successive operations in each type of engine. (*Adv. S. and A. Exam.*, 1889.)

2. Describe, with sketches, the slide valve of the Otto engine, and give a clear explanation of the manner in which the charging of the cylinder with gas and air is provided for. (*Adv. S. and A. Exam.*, 1889.)

3. Describe the pendulum governor of the Otto engine, and point out, by reference to sketches, the manner in which it acts. (*Adv. S. and A. Exam.*, 1889.)

4. State generally the principle adopted in the cycle of operations of the Otto gas engine and the reasons why it works so advantageously. Describe also and sketch the arrangement of valves and passages which serve to admit gas and air in the proper proportions and to discharge the waste products from the cylinder. (*S. and A. Hon. Exam.*, 1889.)

Digitized by Google

APPENDIX II.

LIST OF BOOKS AND PAPERS FOR HONOURS STUDENTS.

ADAMSON. Quadruple Engines. Jour. Iron and Steel Inst., 1875.

BARNABY, SIDNEY W. Marine Propellers. London, 1886.

BRAMWELL. On the Progress Effected in Economy of Fuel in Steam Navigation. Proc. Inst. Mech. Eng., 1872.

CARNOT, S. Réflexions sur la Puissance Motrice du Feu. Paris, 1824 and 1878.

CLARK, D. K. Treatise on Railway Machinery. London, 1854. On the Behaviour of Steam in the Cylinders of Locomotives during Expansion. Proc. I. C. E., Vol, 72, p. 275. *Consult references to papers on action of sides of cylinder given by* Mr. CLARK.

CLAUSIUS, R. Mechanical Theory of Heat. London, 1879.

COTTERILL, Professor. The Steam Engine considered as a Heat Engine. London, 1878.

DWELSHAUVERS-DERY. Les Découvertes Récentes concernant la Machine à Vapeur. Paris, 1880.

*DYER, HENRY. On the Theory of the Steam Engine. Proc. Institute of Engineers and Shipbuilders, Scotland, Session 1885-86.
Also, On the Two Chief Laws of Thermo-dynamics. *Industries*, July and August, 1886.

FREMINVILLE. Etude sur les Machines Compounds. Paris, 1878.

GATELY and KLETZSCH. Cylinder Condensation in Steam Engines. Engineer, December, 1885. Reprinted from Jour. Frank. Inst.

GOODEVE, Professor. Text-Book on the Steam Engine. London. 1887.

HIRN. Théorie Mécanique de la Chaleur. Paris, V. D. Sur l'Utilité des Envelopes à Vapeur. Bull. Soc. de Mulhouse, 1855. Mémoire sur la Théorie de la Surchauffe dans les Machines à Vapeur. Bull. Soc. de Mulhouse, 1856, and the numerous other Papers by HIRN, HALLAUER, and LELOUTRE, mentioned below.

HIRN and CAZIN. Memoire sur la Detente de la Vapeur d'Eau Surchauffée. Annales de Chimie et de Physique. 4 Serie, Tome x.

HOLMES, GEORGE C. V. The Steam Engine. Longmans, Green & Co.'s Text Books of Science Series 1887.

IMRAY. On High Speed Motors. Proc. Inst. C. E., Vol. lxxxiii. 1886.

ISHERWOOD, B. F. Engineering Precedents. New York, 1850. Researches in Engineering. Philadelphia, 1863. On Steam Jacketing. Jour. Frank. Inst., May, 1881. Reprinted in *The Engineer*, December, 1881.

KIRK, A. C. Engines of S.S. *Aberdeen*. *Engineering*, March 31 and May 26, 1882. Reprinted from Trans. of Inst. Nav. Architects, 1882.

MAIR, J. G. On Independent Testing of Steam Engines. Proc. Inst. C. E., Vol. lxx., p. 313.

MALLET. Compound Engines. Van Nostrand's Science Series. Sur l'Utilisation de la Vapeur dans les Locomotives et l'Appli[illegible] Machines du Functionnement Compound. Société de[illegible] Civils. Paris, 1877, p. 852.

Digitized by Google

MARKS. Economy of Compound Engines. Jour. Frank. Inst., Jan., 1884.
MARSHALL. On the Progress and Development of the Marine Engine. Proc. Inst. Mech. Eng., 1881. Reprinted in *The Engineer*, August, 1881.
NAPIER. On the Effects of Superheated Steam. Trans. Inst. Eng. Scot., Vol. vii., p. 86.
NURSEY. On the Superheating of Steam. Trans. Soc. Eng., 1862, pp. 36-59.
PAMBOUR. Théorie des Machines à Vapeur. Paris, 1844.
PARKER. On the Economy of Compound Engines. Engineering, May 12, 1882. Reprinted from Trans. of Inst. Nav. Architects, 1882.
Also, On the Progress and Development of Marine Engineering, *The Engineer*, Aug. 6, 1886. Reprinted from Transactions of Inst. Naval Architects, 1886.
PENN. On the Application of Superheated Steam in Marine Engines. Trans. Inst. Mech. Engineers, 1859, p. 195-210.
RANKINE, Professor. Manual of the Steam Engine. London and Glasgow, V.D. Miscellaneous Papers. London. Memoir of John Elder. Edinburgh, 1871. Papers published in *the Engineer*, 1865-1872.
ROWAN. On the Introduction of the Compound Engine, and the Economical Advantages of High Pressure Steam. Trans. Inst. of Eng. Scot., 1879-80.
RYDER. On the Application of Superheated Steam. Trans. Inst. Mech. Eng., 1860.
SEATON. Manual of Marine Engineering. Sixth Edition, London, 1886.
SENNET. On the Marine Steam Engine. London, 1882.
STROUDLEY. On Locomotive Engines. Proc. Inst. C. E., Vol. lxxxi., p. 76, 1885.
Superheated Steam (Leading Article), *The Engineer*, Dec. 26, 1884. Triple Expansion Engines (Leading Article), *The Engineer*, June 26, 1885.
TAYLOR. Triple Expansion Engines. Trans. N. E. Coast Inst. Eng., Vol. i.
THOMSON, Sir W. An Account of Carnot's Theory. Trans. Royal Society, Edinburgh, 1849. Republished in Collected Papers, all of which should be studied.
THURSTON, Professor. On the Theory of the Steam Engine. B. A. Reports, 1884. On Curves of Efficiency. Jour. Frank. Inst., 1882. History of the Steam Engine. New York and London, 1879.
WETHERED. On Combined Steam. Proc. Inst. C. E., Vol. xix, p. 462.
ZEUNER. Théorie Mécanique de la Chaleur. Paris, 1869. Theorie der Uberhitzen Wasserdampfe. Zeitschrift des Ver Deutscher Ingen. Bd. xi., 1867. Ueber das Verhalten der Uberhitzen Wasserdampfe. Civil Ingenieure. Bd. xiii., 1867. Grundzuege der Mechanischen Daermethsorie, 1866.

* Most of this list is taken from Mr. Dyer's paper on *The Theory of the Steam Engine.*

Digitized by Google

INDEX.

A

"ABERDEEN," S.S., indicator diagrams, 133.
Absolute zero of temperature, 86.
Adiabatic curve, 89, 106.
,, expansion, 89.
Admission of steam to cylinder, 98.
Air-pumps, 291.
American beam engine, 193.
Appendix I., 386.
,, II., 395.
Areas, simple rule, 83.
,, Simpson's rule, 83.
Atmospheric engines, 4.
Ayrton & Perry's dynamometer, 150.

B

BALANCING moving parts, 161.
Beam engines, 13, 15, 17, 193.
Black's experiments on heat, 57.
"Boadicea," H.M.S., indicator diagrams, 130.
Boilers, 298–350.
,, breeches fluid, 303.
,, construction of, 327.
,, Cornish, 300.
,, donkey, 308.
,, egg-ended, 300.
,, Lancashire, 302.
,, land, 298.
,, locomotive, 355.
,, marine, 314.
,, multitubular land, 180.
,, plates, 330.
,, shells, strength, 344.
,, tubulous, 304.
,, vertical, 308, 325.
,, waggon, 298.
,, water-tube, 304.
Boiling point of liquids, 66.
Boyle's law, 79.
Brakes for measuring H.P., 146, 152.
Brock's quadruple-exp. engines, 263a
Bunsen's ice calorimeter, 33, 37.

C

CALORIMETRY, 33, 37.
Capacity for heat, 35.
Carnot's principle, 93.
Cataract governor, 12.
Charles' law, 86.
Clearance in cylinder, 110.
Combining indicator diagrams, 130.
"Comet's" engine, 189.
Compound engines, Hornblower's, 18.
,, ,, land, 180, 185.
,, ,, marine, 235.
,, ,, theory of, 113.
Compound locomotives, 381.
Compression in cylinder, 98, 111.
Condensation of steam, water required, 72, 78.
Conduction of heat, 40.
Conductivity table, 45.
Connecting-rod, 158.
Construction of boilers, 327–350.
Convection of heat, 46.
Copper for boilers, 329.
Cornish boiler, 300.
Coupling dynamometer, 151.
,, for marine shafts, 206.
Crank, action of, 155.
,, effort curves, 160.
,, relative position to piston, 99.
Curves of crank moments, 160.
,, of expansion, 89, 106.
Cushioning, 111.
Cut-off, 98.
Cylinders, 173, 198, 264.

D

DAVY'S, SIR HUMPHREY, experiment on heat, 51.
Density of gas, 79.
,, of steam, 116.
Diagonal engines, 201.
Diagram of work, Watt's, 80.

Digitized by Google

Diagram of work, by indicator, 127.
Diffusivities, table of, 45.
Distribution of steam in a cylinder, 94.
Double-acting engine, Watt's, 15, 17.
Dubs & Co.'s locomotive, 356.
Dynamometers, 146, 152.

E

Early forms of land engines, 1-21.
,, locomotives, 353.
,, marine engines, 353.
Early patents of engines, 20.
Eccentric, angle of advance, 97.
Engines, American beam, 193.
,, atmospheric, 4.
,, "Comet's," 189.
,, compound marine, 235-248.
,, ,, non-condensing, 180.
,, ,, theory of, 113, 250.
,, condensing land, 172.
,, diagonal, 201.
,, double-acting, Watt's, 15, 17.
,, heat engines, 90.
,, "Hero's," 1, 2.
,, horizonal direct-acting, 216.
,, Hornblower's, 18.
,, land, 171, 184.
,, locomotive, 353, 385.
,, non-condensing land, 171.
,, oscillating, 196.
,, quadruple-expansion, 259.
,, Savery's, 3.
,, single-acting, 11, 13.
,, stationary land, 170.
,, triple-expansion, 250.
Evaporation, total heat of, 70.
Expansion gear, 177.
,, of gases doing work, 86, 88.
,, of steam, 105, 250.

F

Flues, strength of, 346.
Fuel Testing Apparatus, 38.
Furnaces, corrugated, 350.

G

Galloway tubes, 303.
Gas, expansion of, 86.
,, pressure of, 79.
,, volume of, 79.
Geared engines, 215.
Giffard's injector, 379
Governor cataract, 12.
,, Hartnell's, 177.
,, Richardson's, 185*f*.
,, Watt's, 15, 17.
Gridiron slide valve, 268.
Griffiths' screw, 225.
Gusset stays in boilers, 342.

H

Heat, capacity for, 35.
,, conduction, 40.
,, convection, 46.
,, conversion, work into heat, 53.
,, engines, 90.
,, latent, 58.
,, quantity of, 32.
,, radiation, 38.
,, sensible, 56.
,, specific, 35.
,, thermo-dynamics, first law, 54.
,, total, of evaporation, 70
,, transfer of, 38.
,, unit of, 32.
Hero's engine, 1.
High-speed engines, 162.
Hirsch's screw, 227.
History of land engines, 1-20.
,, locomotive engines, 354.
,, marine engines, 186.
Hornblower's engine, 18.
Horse-power by Brake, 146, 149*b*.
,, how to find, 137.
,, indicated, 136.
,, nominal, 136.
Hyperbolic curve, 89, 106.
,, logarithms, 145.

I

Indicated horse-power, 136.
Indicator diagrams, 126, 130, 184.
,, Richard's, 123.
,, Thomson's, 125.
,, Watt's, 122.
Inertia of moving parts, 161.
Injector for locomotive, 379.
Isothermal curve, 89, 106.

J

Jacketing cylinders, 107.
Joints in boilers, 330.
Joule's experiments on heat, 51.
Joy's valve gear, 205.

Digitized by Google

L

Lancashire boiler, 302.
Land engines, 170, 185.
Lap and lead, 96, 113.
Latent heat, 58.
Law, Boyle's, 79.
,, Carnot's, 93.
,, Charles', 86.
,, first, of thermo-dynamics, 54.
Link motion, 272.
,, for oscillating cylinder, 199.
Liquefaction in cylinder, 107.
Locomotives, 353-385.
Logarithms, Napierian, 145.
Longitudinal stays in boilers, 342.

M

Mangin's screw, 227.
Manholes, 311.
Marcet's boiler, 59.
Marine boilers, 314-325.
,, engines, American beam, 193.
,, ,, compound, 235-248.
,, ,, diagonal, 201.
,, ,, double cylinder, 195.
,, ,, geared, 213.
,, ,, history of, 186.
,, ,, Maudslay's return connecting-rod, 215.
,, ,, oscillating, 196.
,, ,, Penn's trunk, 214.
,, ,, quadruple-expansion, 259.
,, ,, side lever, 191.
,, ,, steeple, 194.
,, ,, triple-expansion, 250.
,, ,, vertical condensing, 218, 233.
,, ,, ,, non-condensing, 217.
Materials for boiler construction, 327.
Mean pressure formulæ for cylinder, 139.
Moments, twisting of crank, 156.
Multitubular land boiler, 180.

N

Napierian logarithms, 145.
Nature of heat, 49.
Newcomen's atmospheric engine, 4.
Nominal horse-power, 136.
Non-condensing engine, 180, 217.

O

Oscillating cylinder, 198.
,, engines, 196.

P

Paddle-wheels, 208.
Parallel motion, 13, 15.
Passenger locomotive, 355.
Patents, list of early, 20.
Penn's trunk engine, 214.
Pistons, 276.
,, Buckley's, 279.
,, Kirk's coned, 277.
,, Lancaster, 278.
,, locomotive form, 276.
,, old form, 277.
,, relative position to crank, 99.
,, Smeaton's, 6.
,, valves, 271.
Pitch of screw, 221, 231.
Pressure, mean, in cylinder formula, 139.
,, of a gas, 79.
,, of saturated steam, 61, 116.
Prony brake, 146.
Pyrometers, 29, 30*a*.

Q

Quadruple-expansion engines, 259.
Quantity of heat, 32.
Questions at end of each Lecture and in Appendix I.

R

Radiation of heat, 38.
Regnault's experiments, 61.
Release, 98, 113.
Return connecting-rod engine, 215.
Richard's indicator, 123.
Riveted joints, 330.
Rumford, Count, experiments, 49.

S

Safety valve for locomotives, 367.
Saturated steam, tables, 61, 62*a*.
Saturation curve, 106.
Savery's engine, 3.
Screw propellers, 220-231.
,, ,, early forms, 222.
,, ,, early invention 212
Sensible heat, 56.
Shell and flues of boiler
Side-lever engine
Siemens' Pyrom

Digitized by Google

Simpson's rule for areas, 83.
Single-acting engine, Watt's, 11.
Slide valves, 96, 173.
,, double-ported, 267, 269.
,, locomotive, 266, 373.
,, old D form, 266.
,, piston valve, 270.
,, Thom's trick valves, 268.
Slip of screw, 229.
Smeaton's piston, 6.
Specifications, compound marine engines, 242.
,, land condensing, 172.
,, marine boilers, 318.
Specific heat, table, 37.
Staying of boilers, 341.
Steam, distribution in cylinder, 94.
,, engines, early forms, 1-21.
,, expansion of, 105.
,, liquefaction in cylinder, 107.
,, saturated, 61, 62*a*.
,, temperature and press., 58, 62*b*.
,, water required for condensing, 72*a*, 78.
,, wire drawing, 113.
Superheating steam, 108.
Surface condensers, 77, 78, 288.

T

Temperature, 22.
,, absolute zero, 86.
,, of steam, 58, 62*a*.
,, tables, 24.
Thermo-dynamics, first law, 54.
Thermometry, 22.
Thomson's steam indicator, 125.
Thornycroft's screw, 227.
Thrust of screw, 229.
Transmission dynamometer, 149.
Triple-expansion engines, 250.
Trunk engine, 214.
Twisting moment, 156.

U

Unit of heat, 32.

V

Valve gear, Joy's, 205.
,, link motion, 273.
,, oscillating engine, 199.
Valve, lap and lead, 96.
,, motion diagram, 100.
Vertical engines, 217, 235.
Volume of a gas, 79, 62*b*.
,, steam, 116.

W

Waggon boiler, 298.
Water, boiling point, 66.
,, for condensation, 72, 78.
,, pyrometers, 29, 30*a*.
,, total heat of evaporation, 70.
,, tube boiler, 304.
Watt's cataract governor, 12.
,, diagram of work, 80.
,, double-acting engine, 15, 17.
,, engines, 8-18.
,, indicator, 122.
,, model in Glasgow University, 9.
,, single-acting engine, 11, 13.
Wire drawing, 113.
Work and heat, 51.
,, into heat in heat engines, 92.
,, of steam, 116.
Wrought-iron for boilers, 327.

Z

Zero of temperature, 86.
Zeuner's diagrams, 99, 101.

BELL AND BAIN, PRINTERS, GLASGOW.

Digitized by Google

A

CATALOGUE

OF

STANDARD WORKS

PUBLISHED BY

CHARLES GRIFFIN & COMPANY.

	PAGE
I.—Religious Works,	1
II.—Works on Medicine and the Allied Sciences,	5
III.—General Scientific and Technical Works,	14
IV.—Educational Works,	25
V.—Works in General Literature,	31

LONDON:

EXETER STREET, STRAND.

Digitized by Google

INDEX.

PAGE

AITKEN (Sir W., M.D.), Science and Practice of Medicine, ... 5
—— Outlines, ... 5
ANDERSON (M'Call) on Skin Diseases, . 6
BELL (R.), Golden Leaves, ... 31
BERINGER, J. J. & C., Assaying, . . . 14
BLYTH (A. W.), Hygiene and Public Health, 7
—— Foods and Poisons, ... 7
BROUGH (B. H.), Mine Surveying, . . 14
BROWNE (W. R.), Student's Mechanics, . 14
—— Foundations of Mechanics, . . . 14
—— Fuel and Water, ... 14
BRYCE (A. H.), Works of Virgil, . . . 25
BUNYAN'S Pilgrim's Progress (Mason), . 1
CAIRD AND CATHCART, Surgical Ward-Work, 8
CHEEVER'S (Dr.), Religious Anecdotes, . 1
COBBETT (Wm.), Advice to Young Men, . 31
—— Cottage Economy, ... 31
—— English Grammar, ... 25
—— French do., ... 25
—— Legacy to Labourers, ... 32
—— Do. Parsons, ... 32
COBBIN'S Mangnall's Questions, . . . 25
COLERIDGE on Method, ... 26
CRAIK (G.), History of English Literature, . 26
—— Manual of do., ... 26
CRUTTWELL'S History of Roman Literature, 27
—— Specimens of do., 27
—— Early Christian Literature, . 1
CRUDEN'S CONCORDANCE, by Eadie, . 3
—— by Youngman, ... 1
CURRIE (J.), Works of Horace, . . . 27
—— Cæsar's Commentaries, ... 27
DALGAIRNS' Cookery, ... 32
DAVIS (J. R. A.), An Introduction to Biology, 8
DICK (Dr.), Celestial Scenery, . . . 2
—— Christian Philosopher, ... 2
DOERING and GRAEME'S Hellas, . . 28
D'ORSEY (A. J.), Spelling by Dictation, . 28
DOUGLAS (J. C.), Manual of Telegraph Construction, ... 14
DUCKWORTH (Sir D., M.D.), Gout, . . 8
DUPRÉ AND HAKE, Chemistry (Short Manual of), ... 8
EADIE (Rev. Dr.), Biblical Cyclopædia, . 3
—— Cruden's Concordance, ... 3
—— Classified Bible, ... 3
—— Ecclesiastical Cyclopædia, . . . 3
—— Dictionary of Bible, ... 3
EMERALD SERIES OF STANDARD AUTHORS, ... 33
ETHERIDGE (R.), Stratigraphical Geology, 19
EWART (Prof.), The Preservation of Fish, . 8
FIDLER (T. Claxton), Bridge-Construction, . 15
FLEMING (Prof.), Vocabulary of Philosophy, 28
FOSTER (Chas.), Story of the Bible, . . 2
GEDGE (Rev. J. W.), Bible History, . . 1
GILMER (R.), Interest Tables, . . . 32
GRÆME (Elliott), Beethoven, ... 32
—— Novel with Two Heroes, . . . 32
GRIFFIN (J. J.), Chemical Recreations, . 9
GURDEN (R.), Traverse Tables, . . . 16
HADDON'S Embryology, ... 9
JAKSCH (V.) AND CAGNEY, Clinical Diagnosis, 9

PA

JAMES (W. P.), From Source to Sea, . .
JAMIESON (A.), Manual of the Steam Engine
——Steam and the Steam Engine—Elementary,
——Applied Mechanics, ...
——Magnetism and Electricity, ...
JEVONS (F. B.), A History of Greek Literature,
KEBLE'S Christian Year, ...
LANDIS (Dr.), Management of Labour, . .
LANDOIS AND STIRLING'S Physiology, .
LEWIS (W. B.), Mental Diseases, . . .
LINN (Dr.), On the Teeth, ...
LONGMORE (Prof.), Sanitary Contrasts, .
MACALISTER (A.), Human Anatomy, . .
MACKEY (A. G.), Lexicon of Freemasonry, .
MAYHEW (H.), London Labour, ...
M'BURNEY (Dr.), Ovid's Metamorphoses, .
MEYER AND FERGUS' Ophthalmology, .
MILLER (W. G.), Philosophy of Law, . .
MUNRO (R. D.), Steam Boilers, ...
MUNRO AND JAMIESON'S Electrical Pocket-Book, ...
NAPIER (Jas.), Dyeing and Dyeing Receipts, .
PARKER (Prof.), Mammalian Descent, . .
PHILLIPS (J. A.), Elements of Metallurgy, .
—— (J.), Geology, ... 18,
POE (Edgar), Poetical Works of, . . 34,
PORTER (Surg.-Maj.), Surgeon's Pocket-Book,
RAGG (Rev. T.), Creation's Testimony, . .
RAMSAY (Prof.), Roman Antiquities, . .
—— Do. Elementary, . .
—— Latin Prosody, ...
—— Do. Elementary, ...
RANKINE'S ENGINEERING WORKS, 20,
RELIGIONS OF THE WORLD, . . .
REED (Sir E. J.), Stability of Ships, . .
ROBINSON (Prof.), Hydraulics, ...
SCHOOL BOARD READERS AND MANUALS, ...
SCHRADER & JEVONS, The Prehistoric Antiquities of the Aryan Peoples, . .
SCHWACKHÖFER AND BROWNE, Fuel and Water, ...
SEATON (A. E.), Marine Engineering, . .
SENIOR (Prof.), Political Economy, . .
SEXTON (A. H.), Quantitative Analysis, .
——Qualitative Analysis, ...
SEELEY (Prof.), Physical Geology, . . .
SHELTON-BEY (W. V.), Mechanic's Guide, .
SOUTHGATE (H.), Many Thoughts of Many Minds, ...
—— Suggestive Thoughts, ...
—— (Mrs.), Christian Life, ...
STIRLING (William), Human Physiology, .
—— Outlines of Practical Physiology, . .
TAIT (Rev. J.), Mind in Matter, ...
THE MASSES: How shall we reach them? .
THOMSON (Dr. Spencer), Domestic Medicine,
THOMSON'S Seasons, ...
THORBURN (Dr. J.), Diseases of Women, .
THORBURN (Wm), Surgery of the Spine, .
TRAILL (W.), Boilers, ...
WHATELY (Archbishop), Logic, and Rhetoric,
WORDS AND WORKS OF OUR LORD, .
YEAR-BOOK OF SCIENTIFIC SOCIETIES, .

CHARLES GRIFFIN & COMPANY'S LIST OF PUBLICATIONS.

RELIGIOUS WORKS.

ANECDOTES (CYCLOPÆDIA OF RELIGIOUS AND MORAL). With an Introductory Essay by the Rev. GEORGE CHEEVER, D.D. *Thirty-fourth Thousand.* Crown 8vo. Cloth, 3/6.

*** These Anecdotes relate to no trifling subjects; and they have been selected, not for amusement, but for instruction. By those engaged in the tuition of the young, they will be found highly useful.

BIBLE HISTORY (A Manual of). By the Rev. J. WYCLIFFE GEDGE, Diocesan Inspector of Schools for Winchester. Small 8vo. Cloth, neat, 7d.

"This small but very comprehensive Manual is much more than a mere summary of Bible History."—*Church Sunday School Magazine.*

THE LARGE-TYPE BUNYAN.

BUNYAN'S PILGRIM'S PROGRESS. With Life and Notes, Experimental and Practical, by WILLIAM MASON. Printed in large type, and Illustrated with full-page Woodcuts. *Twelfth Thousand.* Crown 8vo. Bevelled boards, gilt, and gilt edges, 3/6.

CHRISTIAN YEAR (The): With Memoir of the Rev. JOHN KEBLE, by W. TEMPLE, Portrait, and Eight Engravings on Steel, after eminent Masters. *New Edition.* Small 8vo, toned paper. Cloth gilt, 5/.

Morocco elegant, ... 10/6.
Malachite, ... 12/6.

*** The above is the only issue of the "Christian Year" with Memoir and Portrait of the Author. In ordering, Griffin's Edition should be specified.

CRUTTWELL (REV. C. T., M.A.) A HISTORY OF EARLY CHRISTIAN LITERATURE. In large 8vo, handsome cloth. [*In preparation.*

*** This work is intended not only for Theological Students, but for General Readers, and will be welcomed by all acquainted with the Author's admirable "*History of Roman Literature,*" a work which has now reached its Fourth Edition.

CRUDEN'S COMPLETE CONCORDANCE TO THE OLD AND NEW TESTAMENTS AND THE BOOKS CALLED APOCRYPHAL. Edited and Corrected by WILLIAM YOUNGMAN. With fine Portrait of CRUDEN. *New Edition.* Imperial 8vo. Cloth, handsome gilt top, 7/6.

Digitized by Google

DICK (Thos., LL.D.): CELESTIAL SCENERY; or, The Wonders of the Planetary System Displayed. This Work is intended for general readers, presenting to their view, in an attractive manner, sublime objects of contemplation. Illustrated. *New Edition.* Crown 8vo, toned paper. Handsomely bound, gilt edges, 5/.

DICK (Dr.): CHRISTIAN PHILOSOPHER (The); or, The Connection of Science and Philosophy with Religion. Revised and enlarged. Illustrated with 150 Engravings on Wood. *Twenty-eighth Edition.* Crown 8vo, toned paper. Handsomely bound, with gilt edges, 5/.

FOSTER (C.): THE STORY OF THE BIBLE, from Genesis to Revelation—including the Historical Connection between the Old and New Testaments. Told in Simple Language.

Now Ready. FOURTH AND GREATLY IMPROVED EDITION. In ROYAL 8VO. Cloth Elegant, 6s. Gilt and Gilt Edges, 7/6.

With Maps and over 250 Engravings

(Many of them Full-page, after the Drawings of Professor CARL SCHÖNHERR and others),

Illustrative of the Bible Narrative, and of Eastern Manners and Customs.

OPINIONS OF THE PRESS.

"A book which, once taken up, is not easily laid down. When the volume is opened, we are fairly caught. Not to speak of the well-executed wood engravings, which will each tell its story, we find a simple version of the main portions of the Bible, all that may most profitably be included in a work intended at once to instruct and charm the young—a version couched in the simplest, purest, most idiomatic English, and executed throughout with good taste, and in the most reverential spirit. *The work needs only to be known to make its way into families,* and it will (at any rate, it *ought* to) become a favourite Manual in Sunday Schools."—*Scotsman.*

"A HOUSEHOLD TREASURE."—*Western Morning News.*

"This attractive and handsome volume . . . written in a simple and transparent style. . . . Mr. Foster's explanations and comments are MODELS OF TEACHING."—*Freeman.*

"This large and handsome volume, abounding in Illustrations, is just what is wanted. . . . The STORY is very beautifully and reverently told."—*Glasgow News.*

"There could be few better Presentation Books than this handsome volume."—*Daily Review.*

"WILL ACCOMPLISH A GOOD WORK."—*Sunday School Chronicle.*

"In this beautiful volume no more of comment is indulged in than is necessary to the elucidation of the text. Everything approaching Sectarian narrowness is carefully eschewed."—*Methodist Magazine.*

"This simple and impressive Narrative . . . succeeds thoroughly in riveting the attention of children; . . . admirably adapted for reading in the Home Circle."—*Daily Chronicle.*

"The HISTORICAL SKETCH connecting the Old and New Testaments is a very good idea; it is a common fault to look on these as distinct histories, instead of as parts of *one grand whole.*"—*Christian.*

"Sunday School Teachers and Heads of Families will best know how to value this handsome volume."—*Northern Whig.*

*** The above is the original English Edition. In ordering, Griffin s Edition, by Charles Foster, should be distinctly specified.

Digitized by Google

STANDARD BIBLICAL WORKS

BY

THE REV. JOHN EADIE, D.D., LL.D.,

Late a Member of the New Testament Revision Company.

This SERIES has been prepared to afford sound and necessary aid to the Reader of Holy Scripture. The VOLUMES comprised in it form in themselves a COMPLETE LIBRARY OF REFERENCE. The number of Copies already issued greatly exceeds A QUARTER OF A MILLION.

I. EADIE (Rev. Prof.): BIBLICAL CYCLOPÆDIA (A); or, Dictionary of Eastern Antiquities, Geography, and Natural History, illustrative of the Old and New Testaments. With Maps, many Engravings, and Lithographed Fac-simile of the Moabite Stone. Large post 8vo, 700 pages. *Twenty-fifth Edition.*

Handsome cloth, ... 7/6.
Morocco antique, gilt edges, . . 16/.

"By far the best Bible Dictionary for general use."—*Clerical Journal.*

II. EADIE (Rev. Prof.): CRUDEN'S CONCORDANCE TO THE HOLY SCRIPTURES. With Portrait on Steel, and Introduction by the Rev. Dr. KING. Post 8vo. *Fifty-first Edition.* Handsome cloth, ... 3/6.

*** Dr. EADIE's has long and deservedly borne the reputation of being the COMPLETEST and BEST CONCORDANCE extant.

III. EADIE (Rev. Prof.): CLASSIFIED BIBLE (The). An Analytical Concordance. Illustrated by Maps. Large Post 8vo. *Sixth Edition.* Handsome cloth, . . . 8/6.

"We have only to add our unqualified commendation of a work of real excellence to every Biblical student."—*Christian Times.*

IV. EADIE (Rev. Prof.): ECCLESIASTICAL CYCLOPÆDIA (The). A Dictionary of Christian Antiquities, and of the History of the Christian Church. By the Rev. Professor EADIE, assisted by numerous Contributors. Large Post 8vo. *Sixth Edition.*

Handsome cloth, ... 8/6.

"The ECCLESIASTICAL CYCLOPÆDIA will prove acceptable both to the clergy and laity of Great Britain. A great body of useful information will be found in it."—*Athenæum.*

V. EADIE (Rev. Prof.): DICTIONARY OF THE HOLY BIBLE (A); for the use of Young People. With Map and Illustrations. Small 8vo. *Thirty-eighth Thousand.*

Cloth, elegant, ... 2/6.

Digitized by Google

RELIGIONS OF THE WORLD (The): Being

Confessions of Faith contributed by Eminent Members of every Denomination of Christians, also of Mahometanism, Parseeism, Brahminism, Mormonism, &c., &c., with a Harmony of the Christian Confessions of Faith by a Member of the Evangelical Alliance. Crown 8vo. Cloth bevelled, 3/6.

SOUTHGATE (Henry): SUGGESTIVE

THOUGHTS ON RELIGIOUS SUBJECTS. (See page 36.)

SOUTHGATE (Mrs. H.): THE CHRISTIAN

LIFE: Thoughts in Prose and Verse from Five hundred of the Best Writers of all Ages. Selected and Arranged for Every Day in the Year. Small 8vo. With Red Lines and unique Initial Letters on each page. Cloth Elegant, 5/. Morocco, 10/6. *Second Edition.*

"A volume as handsome as it is intrinsically valuable." —*Scotsman.*
"The readings are excellent."—*Record.*
"A library in itself."—*Northern Whig.*

TAIT (Rev. James): MIND IN MATTER: A

Short Argument on Theism. *Second Edition.* Demy 8vo. Handsome Cloth, 8/6.

GENERAL CONTENTS.—Evolution in Nature and Mind—Mr. Darwin and Mr. Herbert Spencer—Inspiration, Natural and Supernatural—Deductions.

"An able and original contribution to Theistic literature. . . . The style is pointed, concise, and telling to a degree."—*Glasgow Herald.*
"Mr. TAIT advances many new and striking arguments . . . highly suggestive and fresh."—*Brit. Quarterly Review.*

THE MASSES: How Shall we Reach Them?

Some Hindrances in the way, set forth from the standpoint of the People, with Comments and Suggestions. By an OLD LAY-HELPER. Cloth, 2s. 6d. *Second Edition.*

*** An attempt to set forth some deficiencies in our present methods of reaching the poor, in the language of the people themselves.

"So full of suggestiveness that we should reprint a tithe of the book if we were to transcribe all the extracts we should like to make."—*Church Bells.*

"'Hindrances in the way' exactly describes the subject-matter of the Book. Any one contemplating Missionary work in a large town would be helped by studying it."—*Guardian.*

"'The Masses' is a book to be well pondered over and acted upon."—*Church Work.*

"A very useful book, well worth reading."—*Church Times.*

"A most interesting book. . . . Contains a graphic description of work among the masses."—*English Churchman.*

WORDS AND WORKS OF OUR BLESSED

LORD: and their Lessons for Daily Life. Two Vols. in One. Foolscap 8vo. Cloth, gilt edges, 6/.

Digitized by Google

WORKS

By Sir WILLIAM AITKEN, M.D., Edin., F.R.S.,

PROFESSOR OF PATHOLOGY IN THE ARMY MEDICAL SCHOOL; EXAMINER IN MEDICINE FOR THE MILITARY MEDICAL SERVICES OF THE QUEEN; FELLOW OF THE SANITARY INSTITUTE OF GREAT BRITAIN; CORRESPONDING MEMBER OF THE ROYAL IMPERIAL SOCIETY OF PHYSICIANS OF VIENNA; AND OF THE SOCIETY OF MEDICINE AND NATURAL HISTORY OF DRESDEN.

SEVENTH EDITION.

The SCIENCE and PRACTICE of MEDICINE.

In Two Volumes, Royal 8vo., cloth. Illustrated by numerous Engravings on Wood, and a Map of the Geographical Distribution of Diseases. To a great extent Rewritten; Enlarged, Remodelled, and Carefully Revised throughout, 42/.

In reference to the Seventh Edition *of this important Work, the Publishers would only remark, that no labour or expense has been spared to sustain its well-known reputation as "The Representative Book of the Medical Science and Practice of the Day." Among the More Important Features of the New Edition, the subject of* DISEASES OF THE BRAIN AND NERVOUS SYSTEM *may be specially mentioned.*

Opinions of the Press.

"The work is an admirable one, and adapted to the requirements of the Student, Professor, and Practitioner of Medicine. . . . The reader will find a large amount of information not to be met with in other books, epitomised for him in this. We know of no work that contains so much, or such full and varied information on all subjects connected with the Science and Practice of Medicine."—*Lancet.*

"Excellent from the beginning, and improved in each successive issue, Dr. Aitken's GREAT and STANDARD WORK has now, with vast and judicious labour, been brought abreast of every recent advance in scientific medicine and the healing art, and affords to the Student and Practitioner a store of knowledge and guidance of altogether inestimable value. . . . A classical work which does honour to British Medicine, and is a compendium of sound knowledge."—*Extract from Review in "Brian," by J. Crichton-Browne, M.D., F.R.*

"The SEVENTH EDITION of this important Text-Book fully maintains its reputation. . . . Dr. Aitken is indefatigable in his efforts. . . . The section on DISEASES of the BRAIN and NERVOUS SYSTEM is completely remodelled, so as to include all the most recent researches, which in this department have been not less important than they are numerous"—*British Medical Journal.*

"The STANDARD TEXT-BOOK in the English Language. . . . There is, perhaps, no work more indispensable for the Practitioner and Student."—*Edin. Medical Journal.*

"The extraordinary merit of Dr. Aitken's work. . . . The author has unquestionably performed a service to the profession of the most valuable kind."—*Practitioner.*

OUTLINES OF THE SCIENCE AND PRACTICE OF MEDICINE. A Text-Book for Students. *Second Edition.* Crown 8vo, 12/6.

"Students preparing for examinations will hail it as a perfect godsend for its conciseness."—*Athenæum.*

"Well-digested, clear, and well-written, the work of a man conversant with every detail of his subject, and a thorough master of the art of teaching."—*British Medical Journal.*

Digitized by Google

By PROFESSOR T. M'CALL ANDERSON, M.D.

Now ready, with two Coloured Lithographs, Steel Plate, and numerous Woodcuts. Royal 8vo, Handsome Cloth, 25s.

DISEASES OF THE SKIN

(A TREATISE ON),

WITH SPECIAL REFERENCE TO DIAGNOSIS AND TREATMENT, INCLUDING AN ANALYSIS OF 11,000 CONSECUTIVE CASES.

BY T. M'CALL ANDERSON, M.D.,

Professor of Clinical Medicine, University of Glasgow.

The want of a manual, embodying the most recent advances in the treatment of cutaneous affections, has made itself much felt of late years. PROFESSOR M'CALL ANDERSON'S Treatise, therefore, affording, as it does, a complete *résumé* of the best modern practice, will be doubly welcome. It is written—not from the standpoint of the University Professor—but from that of one who, during upwards of a quarter of a century, has been actively engaged both in private and in hospital practice, with unusual opportunities for studying this class of disease, hence the PRACTICAL and CLINICAL directions given are of great value.

Speaking of the practical aspects of Dr. ANDERSON'S work, the *British Medical Journal* says:—"Skin diseases are, as is well-known, obstinate and troublesome, and the knowledge that there are ADDITIONAL RESOURCES besides those in ordinary use will give confidence to many a puzzled medical man, and enable him to encourage a doubting patient. ALMOST ANY PAGE MIGHT BE USED TO ILLUSTRATE THE FULNESS OF THE WORK IN THIS RESPECT. . . . The chapter on Eczema, that universal and most troublesome ailment, describes in a comprehensive spirit and with the greatest accuracy of detail the various methods of treatment. Dr. Anderson writes with the authority of a man who has tried the remedies which he discusses, and the information and advice which he gives cannot fail to prove extremely valuable."

Opinions of the Press.

"Beyond doubt, the MOST IMPORTANT WORK on Skin Diseases that has appeared in England for many years. . . . Conspicuous for the AMOUNT AND EXCELLENCE of the CLINICAL AND PRACTICAL information which it contains."—*British Medical Journal.*

"Professor M'Call Anderson has produced a work likely to prove *very acceptable* to the busy practitioner. The sections on treatment are very full. For example, ECZEMA has 110 pages given to it, and 78 of these pages are devoted to treatment."—*Lancet.*

Digitized by Google

WORKS by A. WYNTER BLYTH, M.R.C.S., F.C.S.,

Public Analyst for the County of Devon, and Medical Officer of Health for St. Marylebone.

I. FOODS: THEIR COMPOSITION AND ANALYSIS.

Price 16/. In Crown 8vo, cloth, with Elabor Tables and Litho-Plates. *Third Edition.* Revised and partly rewritten.

General Contents.

History of Adulteration—Legislation, Past and Present—Apparatus useful to the Food Analyst—"Ash"—Sugar—Confectionery—Honey—Treacle—Jams and Preserved Fruits—Starches—Wheaten-Flour—Bread—Oats—Barley—Rye—Rice—Maize—Millet—Potato—Peas—Chinese Peas—Lentils—Beans—MILK—Cream—Butter—Cheese—Tea—Coffee—Cocoa and Chocolate—Alcohol—Brandy—Rum—Whisky—Gin—Arrack—Liqueurs—Beer—Wine—Vinegar—Lemon and Lime Juice—Mustard—Pepper—Sweet and Bitter Almond—Annatto—Olive Oil—Water. *Appendix:* Text of English and American Adulteration Acts.

"Will be used by every Analyst."—*Lancet.*

"STANDS UNRIVALLED for completeness of information. . . . A really 'practical' work for the guidance of practical men."—*Sanitary Record.*

"An admirable digest of the most recent state of knowledge. . . . Interesting even to lay-readers."—*Chemical News.*

*** The NEW EDITION contains many Notable Additions, especially on the subject of MILK and its relation to FEVER-EPIDEMICS, the PURITY of WATER-SUPPLY, the new MARGARINE ACT, &c., &c.

COMPANION VOLUME.

II. POISONS: THEIR EFFECTS AND DETECTION.

Price 16/. *Second Edition.*

General Contents.

Historical Introduction—Statistics—General Methods of Procedure—Life Tests—Special Apparatus—Classification: I.—ORGANIC POISONS: (*a.*) Sulphuric, Hydrochloric, and Nitric Acids, Potash, Soda, Ammonia, &c.; (*b.*) Petroleum, Benzene, Camphor, Alcohols, Chloroform, Carbolic Acid, Prussic Acid, Phosphorus, &c.; (*c.*) Hemlock, Nicotine, Opium, Strychnine, Aconite, Atropine, Digitalis, &c.; (*d.*) Poisons derived from Animal Substances; (*e.*) The Oxalic Acid Group. II.—INORGANIC POISONS: Arsenic, Antimony, Lead, Copper, Bismuth, Silver, Mercury, Zinc, Nickel Iron, Chromium, Alkaline Earths, &c. *Appendix:* A. Examination of Blood and Blood-Spots. B. *Hints for Emergencies:* Treatment—Antidotes.

"Should be in the hands of every medical practitioner."—*Lancet.*

"A sound and practical Manual of Toxicology, which cannot be too warmly recommended. One of its chief merits is that it discusses substances which have been overlooked."—*Chemical News.*

"One of the best, most thorough, and comprehensive works on the subject."—*Saturday Review.*

HYGIENE AND PUBLIC HEALTH (a Dictionary of): embracing the following subjects:—

I.—SANITARY CHEMISTRY: the Composition and Dietetic Value of Foods, with the Detection of Adulterations.

II.—SANITARY ENGINEERING: Sewage, Drainage, Storage of Water, Ventilation, Warming, &c.

III.—SANITARY LEGISLATION: the whole of the PUBLIC HEALTH ACT, together with portions of other Sanitary Statutes, in a form admitting of easy and rapid Reference.

IV.—EPIDEMIC AND EPIZOOTIC DISEASES: their History and Propagation, with the Measures for Disinfection.

V.—HYGIENE—MILITARY, NAVAL, PRIVATE, PUBLIC, SCHOOL.

Royal 8vo, 672 pp., cloth, with Map and 140 Illustrations, 28/.

"A work that must have entailed a vast amount of labour and research. . . . become a STANDARD WORK IN PUBLIC HEALTH."—*Medical Times and Gazette.*

"Contains a great mass of information of easy reference."—*Sanitary Record.*

Digitized by Google

CAIRD (F. M., M.B., F.R.C.S.), and CATHCART (C. W., M.B., F.R.C.S.):

A SURGICAL HANDBOOK: For the use of Practitioners, Students, House-Surgeons, and Dressers. With Numerous Illustrations. *Third Edition.* Pocket-size, Leather, 8/6.

"This is a THOROUGHLY PRACTICAL MANUAL, well up to date, clear, accurate, and succinct. It is thoroughly trustworthy, handy, and well got up."—*Lancet.*

DAVIS (J. R. A., B.A., Lecturer on Biology at the University College of Wales, Aberystwyth):

AN INTRODUCTION TO BIOLOGY, for the use of Students. Comprising Vegetable and Animal Morphology and Physiology.

General Contents.

PART I. VEGETABLE MORPHOLOGY AND PHYSIOLOGY: Fungi; Algae; The Moss The Fern; Gymnosperms; Angiosperms.
Comparative Vegetable Morphology and Physiology; Classification of Plants.

PART II. ANIMAL MORPHOLOGY AND PHYSIOLOGY: Protozoa; Cœlenterata; Vermes; Arthropoda; Mollusca; Amphibia; Aves; Mammalia.
Comparative Animal Morphology and Physiology; Classification of Animals.

With Bibliography, Exam.-Questions, complete Glossary, and 158 *Illustrations.*
Large Crown 8vo. 12*s.* 6*d.*

"The volume is literally packed with information."—*Glasgow Medical Journal.*
"As a general work of reference, Mr. Davis' Manual will be highly serviceable both to medical men and to amateur or professional scientists."—*British Medical Journal.*

DUCKWORTH (Sir Dyce, M.D. (Edin.), F.R.C.P.):

GOUT (A Treatise on): for the Use of Practitioners and Students. With Chromo-Lithograph, Folding Plate, and Illustrations. Royal 8vo, 25s.

DUPRÉ (A., Ph.D., F.R.S.), and WILSON HAKE (Ph.D., F.I.C., F.C.S., of the Westminster Hospital Medical School):

INORGANIC CHEMISTRY (A Short Manual of): with Coloured Plate of Spectra. Crown 8vo, Cloth, 7s. 6d.

"The BEST MANUAL for Medical aspirants that has appeared on the subject of Inorganic Chemistry."—*Analyst.*
"This EMINENTLY LUCID exposition of Chemical truths."—*Chemical News.*
"Valuable to the Student and Practical Man alike, the Book has a freshness due partly to new ideas and new processes, partly to its racy and forcible style."—*Chemist and Druggist.*
"A well-written, clear, and accurate Elementary Manual of Inorganic Chemistry. . . . We agree heartily in the system adopted by Drs. Dupré and Hake. WILL MAKE EXPERIMENTAL WORK TREBLY INTERESTING BECAUSE INTELLIGIBLE."—*Saturday Review.*

EWART (J. COSSAR, M.D., F.R.S.E., Regius Professor of Natural History, University of Edinburgh):

THE PRESERVATION OF FISH, in reference to Food Supply (Hints on). In Crown 8vo, Wrapper, 6d.

Digitized by Google

GRIFFIN (John Joseph, F.C.S.):

CHEMICAL RECREATIONS: A Popular Manual of Experimental Chemistry. With 540 Engravings of Apparatus. *Tenth Edition.* Crown 4to. Cloth.

Part I.—Elementary Chemistry, 2/.

Part II.—The Chemistry of the Non-Metallic Elements, including a Comprehensive Course of Class Experiments, 10/6.

Or, complete in one volume, cloth, gilt top, . . 12/6.

HADDON (A. C., M.A., F.Z.S., Professor of Zoology at the Royal College of Science, Dublin):

AN INTRODUCTION TO THE STUDY OF EMBRYOLOGY, for the use of Students. With 190 Illustrations. In Royal 8vo, Cloth, 18s.

The object of the Author in preparing this book has been, "to give a brief connected account of the PRINCIPAL ORGANS, merely mentioning those structures and phenomena which may be regarded as of *secondary* importance." Hence, the work is admirably adapted for those beginning the difficult study of Embryology. The more advanced Sections are printed in smaller type, and most of the Illustrations have been drawn so as to admit of their being coloured uniformly throughout by the Student himself. A uniform system of colouration will be found to be of great assistance to the memory.

Press Opinions.

"An EXCELLENT RÉSUMÉ OF RECENT RESEARCH, well adapted for self-study. . . . Gives remarkably good accounts (including all recent work) of the development of the heart and other organs. . . . The book is handsomely got up."—*Lancet.*

"PROF. HADDON has the real scientific spirit for work of this kind. . . . The development of the various organs ably demonstrated. . . . Forms a handsome volume."—*Brit. Med. Journal.*

JAKSCH (Prof. R. von, University of Graz):

CLINICAL DIAGNOSIS: A Text-book of the Chemical, Microscopical, and Bacteriological Evidence of Disease. Translated from the Second German Edition, with additions, by JAMES CAGNEY, M.A., M.D., St Mary's Hospital. With numerous Illustrations. Royal 8vo.

LANDIS (Henry G., A.M., M.D., Professor of Obstetrics in Starling Medical College, Fellow of the American Academy of Medicine):

THE MANAGEMENT OF LABOUR AND OF THE LYING-IN PERIOD. A Practical Guide for the Young Practitioner. In 8vo, with Illustrations. Cloth, 7/6.

"Fully accomplishes the object kept in view by its author. . . . Will be found of GREAT VALUE by the young practitioner."—*Glasgow Medical Journal.*

LEWIS (W. Bevan, L.R.C.P., M.R.C.S., Medical Director of the West-Riding Asylum, Wakefield):

MENTAL DISEASES (A Text-book of): With Special Reference to the Pathological Aspects of Insanity. For the Use of Students and Practitioners. With 18 Litho-Plates, Charts, and Illustrations. Royal 8vo.

Digitized by Google

Professors LANDOIS and STIRLING.

HUMAN PHYSIOLOGY

(A TEXT-BOOK OF):

Including Histology and Microscopical Anatomy.

WITH SPECIAL REFERENCE TO PRACTICAL MEDICINE,

By DR. L. LANDOIS,

PROF. OF PHYSIOLOGY, UNIVERSITY OF GREIFSWALD.

Translated from the Sixth German Edition, with Annotations and Additions,

By WM. STIRLING, M.D., Sc.D.,

BRACKENBURY PROFESSOR OF PHYSIOLOGY IN OWENS COLLEGE, AND VICTORIA UNIVERSITY, MANCHESTER; EXAMINER IN THE UNIVERSITIES OF OXFORD AND CAMBRIDGE.

Royal 8vo, Handsome Cloth. 34s.

With very Numerous Illustrations.

THIRD ENGLISH EDITION.

GENERAL CONTENTS.

PART I.—Physiology of the Blood, Circulation, Respiration, Digestion, Absorption, Animal Heat, Metabolic Phenomena of the Body.

PART II.—Secretion of Urine; Structure of the Skin; Physiology of the Motor Apparatus; the Voice and Speech; General Physiology of the Nerves; Electro-Physiology; the Brain; Organs of Vision, Hearing, Smell, Taste, Touch; Physiology of Development.

*** Since its first appearance in 1880, Prof. LANDOIS' TEXT-BOOK OF PHYSIOLOGY has been translated into three Foreign languages, and passed through five large editions.

To meet the wishes of Students, the THIRD ENGLISH EDITION has been issued in ONE VOLUME, printed on specially prepared paper. Numerous Additions have been made throughout, bringing the work abreast in all respects of the latest researches in Physiology and their bearing on Practical Medicine; and the number of Illustrations has also been largely increased—from 494 in the First to 692 in the present Edition.

"So great are the advantages offered by Prof. LANDOIS' TEXT-BOOK, from the EXHAUSTIVE and EMINENTLY PRACTICAL manner in which the subject is treated, that it has passed through FOUR large editions in the same number of years. . . . Dr. STIRLING'S annotations have materially added to the value of the work. Admirably adapted for the PRACTITIONER. . . . With this Text-book at command, NO STUDENT COULD FAIL IN HIS EXAMINATION."—*The Lancet.*

"One of the MOST PRACTICAL WORKS on Physiology ever written, forming a 'bridge' between Physiology and Practical Medicine. . . . Its chief merits are its completeness and conciseness. . . . The additions by the Editor are able and judicious. . . . EXCELLENTLY CLEAR, ATTRACTIVE, AND SUCCINCT."—*Brit. Med. Journal.*

"The great subjects dealt with are treated in an admirably clear, terse, and happily-illustrated manner. At every turn the doctrines laid down are illuminated by reference to facts of Clinical Medicine or Pathology."—*Practitioner.*

"We have no hesitation in saying that THIS IS THE WORK to which the PRACTITIONER will turn whenever he desires light thrown upon, or information as to how he can best investigate, the phenomena of a COMPLICATED OR IMPORTANT CASE. To the STUDENT it will be EQUALLY VALUABLE."—*Edinburgh Medical Journal.*

"LANDOIS and STIRLING'S work cannot fail to establish itself as one of the most useful and popular works known to English readers."—*Manchester Medical Chronicle.*

"As a work of reference, LANDOIS and STIRLING'S Treatise OUGHT TO TAKE THE FOREMOST PLACE among the text-books in the English language. The woodcuts are noticeable for their number and beauty."—*Glasgow Medical Journal.*

"Unquestionably th[illegible] admirable exposition of the relations of Human Physiology to Practical Medicine [illegible] been laid before English readers."—*Students' Journal.*

Digitized by Google

By Drs. MEYER and FERGUS.

Now Ready, with Three Coloured Plates and numerous Illustrations.
Royal 8vo, Handsome Cloth, 25s.

DISEASES OF THE EYE

(A PRACTICAL TREATISE ON),

By EDOUARD MEYER,

Prof. à l'Ecole Pratique de la Faculté de Médecine de Paris,
Chev. of the Leg. of Honour, &c.

Translated from the Third French Edition, with Additions as contained in the Fourth German Edition,
By F. FERGUS, M.B., Ophthalmic Surgeon, Glasgow Infirmary.

The particular features that will most commend Dr. Meyer's work to English readers are—its CONCISENESS, its HELPFULNESS in explanation, and the PRACTICALITY of its directions. The best proof of its worth may, perhaps, be seen in the fact that it has now gone through *three* French and *four* German editions, and has been translated into most European languages—Italian, Spanish, Russian, and Polish—and even into Japanese.

Opinions of the Press.

"A GOOD TRANSLATION OF A GOOD BOOK. . . . A SOUND GUIDE in the diagnosis and treatment of the various diseases of the eye that are likely to fall under the notice of the general Practitioner. The Paper, Type, and Chromo-Lithographs are all that could be desired. . . . We know of no work in which the DISEASES and DEFORMITIES of the LIDS are more fully treated. Numerous figures illustrate almost every defect remediable by operation."—*Practitioner.*

"A VERY TRUSTWORTHY GUIDE in all respects. . . . THOROUGHLY PRACTICAL. Excellently translated, and very well got up. Type, Woodcuts, and Chromo-Lithographs are alike excellent."—*Lancet.*

"Any Student will find this work of GREAT VALUE. . . . The chapter on Cataract is excellent. . . . The Illustrations describing the various plastic operations are specially helpful."—*Med. Journal.*

"AN EXCELLENT TRANSLATION of a standard French Text-Book. . . . We can cordially recommend Dr. Meyer's work. It is essentially a PRACTICAL WORK. The Publishers have done their part in the tasteful and substantial manner characteristic of their medical publications."—*Quarterly Review.*

Digitized by Google

LINN (S.H., M.D., D.D.S., Dentist to the Imperial Medico-Chirurgical Academy of St. Petersburg):

THE TEETH: How to preserve them and prevent their Decay. A Popular Treatise on the Diseases and the Care of the Teeth. With Plates and Diagrams. Crown 8vo. Cloth, 2/6.

"Many important truths on the preservation of the teeth and the irregularity of children's teeth are here set forth; and on the subject of artificial teeth there is sound advice, which most of us may sooner or later be glad of."—*Medical Times and Gazette.*
"Contains much useful information and excellent advice."—*Leeds Mercury.*
"Deserves to be widely read."—*Northern Whig.*
"We heartily recommend the treatise."—*John Bull.*

LONGMORE (Surgeon-General, C.B., Q.H.S., F.R.C.S., &c., Professor of Military Surgery in the Army Medical School):

THE SANITARY CONTRASTS OF THE CRIMEAN WAR. Demy 8vo. Cloth limp, 1/6.

"A most valuable contribution to Military Medicine."—*British Medical Journal.*
"A most concise and interesting Review."—*Lancet.*

MACALISTER (A., M.D., F.R.S., Professor of Anatomy, University of Cambridge):

A TEXT-BOOK OF HUMAN ANATOMY, for the use of Students and Practitioners. With 816 Illustrations. Royal 8vo. 36s.

PARKER (Prof. W. Kitchen, F.R.S., Hunterian Professor, Royal College of Surgeons):

MAMMALIAN DESCENT: being the Hunterian Lectures for 1884. Adapted for General Readers. With Illustrations. In 8vo. Handsome cloth, 10s. 6d.

"This is a remarkable book. . . . Accuracy of statement, skill in marshalling facts, lucidity, impartiality, all these we might have expected to find, as we do find them. But Prof. PARKER goes beyond these things; he has varied learning, keen philosophic insight, and a poetic range of intellectual vision. Our advice is: *Get this book, and read it.* You will be first interested; then absorbed."—*Scotsman.*
"A very striking book . . . as readable as a book of travels. Prof. PARKER is no Materialist."—*Leicester Post.*

PORTER (Surgeon-Major J. H., Late Assistant Professor of Military Surgery in the Army Medical School):

THE SURGEON'S POCKET-BOOK: an Essay on the Best Treatment of the Wounded in War; for which a Prize was awarded by Her Majesty the Empress of Germany. Specially adapted to the PUBLIC MEDICAL SERVICES. With 152 Illustrations and folding-plate, fcp. 8vo, roan, 7/6. *Third Edition, Revised and Enlarged.* By Brigade-Surgeon C. H. Y. GODWIN, of the Army Medical School.

"Every Medical Officer is recommended to have the 'Surgeon's Pocket-Book' by Surgeon-Major Porter, accessible to refresh his memory and fortify his judgment."—*Précis of Field-Service Medical Arrangements for Afghan War.*
"A complete *vade mecum* to guide the military surgeon in the field."—*British Medical Journal.*
"A capital little book . . . of the greatest practical value. . . . A surgeon with this Manual in his pocket becomes a man of resource at once."—*Westminster Review.*

Digitized by Google

SEXTON (A. Humboldt, F.C.S., Professor of Metallurgy, Glasgow and West of Scotland Technical College):

1. QUANTITATIVE ANALYSIS (Outlines of). For the Use of Students. With Numerous Illustrations. *Second Edition.* Crown 8vo. Cloth, 3/.

"A good and useful book. . . . Really supplies a want."—*The Lancet.*
"This is an admirable little volume, and well fulfils its purpose."—*Schoolmaster.*

2. QUALITATIVE ANALYSIS (Outlines of). For the use of Students. With numerous Illustrations. Crown 8vo. Cloth, 3/6.

"The Work of a thorough practical Chemist . . . and one which may be unhesitatingly recommended."—*Brit. Medical Journal.*

STIRLING (William, M.D., D.Sc., Owens College, Manchester):

A TEXT-BOOK OF HUMAN PHYSIOLOGY (*See under Landois and Stirling, page* 10). *Third Edition.*

OUTLINES OF PRACTICAL PHYSIOLOGY: including Experimental and Chemical Physiology. With special reference to Clinical Medicine. A Laboratory Handbook for the use of Students. With 142 Illustrations. In large Crown 8vo, 8/6.

*** This work - based on the Owens College Course - is intended as a practical Handbook for all Students of Physiology. The EXPERIMENTS are to be worked out by the Student himself, and the APPARATUS required is, therefore, mostly of a simple character. The aim has been so to arrange the Exercises as to give them a bearing on, and lead gradually up to, the methods used in Practical Medicine.

"An excellent treatise, which we can thoroughly recommend."—*Lancet.*

"May be confidently recommended as a guide to the Student of Physiology."—*Glasgow Medical Journal.*

THORBURN (John, M.D., F.R.C.P., Late Professor of Obstetric Medicine, Owens College and Victoria University, Manchester; Obstetric Physician to the Manchester Royal Infirmary):

THE DISEASES OF WOMEN (A Practical Treatise on). Prepared with Special Reference to the Wants of the General Practitioner and Advanced Student. With Chromo-lithograph, and over 200 Illustrations. Royal 8vo, handsome cloth, 21/.

"A task of extraordinary difficulty . . . handled with GREAT JUDICIOUSNESS and HIGH LITERARY SKILL. . . . Professor Thorburn has done his duty . . . he lets his readers understand all sides of a question, and never fails to inculcate the highest principles. . . . The ENTIRE WORK is IMPARTIAL and INSTRUCTIVE, and in every way worthy of its author."—*British Medical Journal.*

THORBURN (Wm., B.S., B.Sc., M.D., F.R.C.S[illegible] Assistant-Surgeon to the Manchester Royal Infirmary):

THE SURGERY OF THE SPINAL CORD (A Contribution [illegible] With Diagrams, Tables, and Illustrations. Medium 8vo. Hands[illegible] cloth, 12s. 6d.

Digitized by Google

GENERAL SCIENTIFIC AND TECHNICAL WORKS.

BERINGER, J. J. (F.I.C., F.C.S., Public Analyst for, and Lecturer to the Mining Association of, Cornwall), and C. BERINGER, F.I.C., F.C.S.

ASSAYING (A Text-Book of): for the Use of Students, Mine Managers, Assayers, &c. With numerous Tables and Illustrations. Crown 8vo. Cloth.

BROWNE (Walter R., M.A., M. Inst. C.E., F.G.S., late Fellow of Trinity College, Cambridge):

THE STUDENT'S MECHANICS: An Introduction to the Study of Force and Motion. With Diagrams. Crown 8vo. Cloth, 4/6.

"Clear in style and practical in method, 'THE STUDENT'S MECHANICS,' is cordially to be recommended from all points of view. . . . Will be of great value to Students desirous to gain full knowledge."—*Athenæum.*

"The merits of the work are especially conspicuous in its clearness and brevity . . . deserves the attention of all who have to teach or learn the elements of Mechanics. . . . An excellent conception."—*Westminster Review.*

——— FOUNDATIONS OF MECHANICS.

Papers reprinted from the *Engineer.* In crown 8vo, 1/.

——— FUEL AND WATER: A Manual for

Users of Steam and Water. By Prof. SCHWACKHÖFER and W. R. BROWNE, M.A. (See p. 29.)

BROUGH (B. H., F.G.S., Instructor of Mine Surveying, Royal School of Mines):

MINE SURVEYING (A Text-Book of): for the Use of Managers of Mines and Collieries, Students at the Royal School of Mines, City and Guilds of London Institute, &c. With Illustrations. *Second Edition.* Crown 8vo, cloth, 7/6.

"Supplies a long-felt want."—*Iron.*

"A valuable accessory to Surveyors in every department of commercial enterprise."—*Colliery Guardian.*

"The information is given in a concise manner."—*Engineering.*

DOUGLAS (John Christie, Mem. Soc. Tel. Eng., late of the East India Govt. Telegraph Department, &c.):

A MANUAL OF TELEGRAPH CONSTRUCTION. For the use of Telegraph Engineers and others. With numerous Diagrams. Crown 8vo. Cloth, bevelled, 15/.

Second Edition. [illegible] the approval of the Director-General of Telegraphs [illegible]

Digitized by Google

Medium 8vo, Handsome Cloth, 30s.

BRIDGE-CONSTRUCTION

(A PRACTICAL TREATISE ON):

Being a Text-Book on the Design and Construction of Bridges in Iron and Steel.

FOR THE USE OF STUDENTS, DRAUGHTSMEN, AND ENGINEERS.

BY

T. CLAXTON FIDLER, M. INST. C.E.

With Numerous Woodcuts and 17 Lithographic Plates.

THE object of this book is to describe the modern practice of Bridge-Construction, and to set forth in the simplest language the mechanical principles and experimental facts on which it is based. The design and arrangement of the work have been dictated by a desire to render it as useful as possible, not only to Engineers or Draughtsmen who may be engaged in the work of Bridge-Calculations and Bridge-Construction, but also to Students. With this object, the earlier chapters of the work are devoted to a simple demonstration of those mechanical principles which must of necessity form the beginning of any study of the subject, and which are more fully developed and applied in later portions of the book.

"Should prove not only an indispensable Hand-book for the Practical Engineer, but also a stimulating Treatise to the Student of Mathematical Mechanics and Elasticity."—*Nature.*

"One of the VERY BEST RECENT works on the Strength of Materials and its application to Bridge-Construction. . . . Well repays a careful study."—*Engineering.*

"As an exposition of the LATEST advances of the Science, we are glad to welcome this well-written Treatise."—*Architect.*

"A Scientific Treatise of great merit, which cannot but prove useful."—*Westminster Review.*

"Mr. Fidler's book is one which every Student of Mechanics ought to possess, and which merits, as it will receive, the appreciative attention of all practical men."—*Scotsman.*

A full Prospectus of the above important work may be had on application to the Publishers.

Digitized by Google

GURDEN (Richard Lloyd, Authorised Surveyor for the Governments of New South Wales and Victoria):

TRAVERSE TABLES: computed to Four Places Decimals for every Minute of Angle up to 100 of Distance. For the use of Surveyors and Engineers. *Second Edition.* Folio, strongly half-bound, 21/.

*** *Published with Concurrence of the Surveyors-General for New South Wales and Victoria.*

"Those who have experience in exact SURVEY-WORK will best know how to appreciate the enormous amount of labour represented by this valuable book. The computations enable the user to ascertain the sines and cosines for a distance of twelve miles to within half an inch, and this BY REFERENCE TO BUT ONE TABLE, in place of the usual Fifteen minute computations required. This alone is evidence of the assistance which the Tables ensure to every user, and as every Surveyor in active practice has felt the want of such assistance, few knowing of their publication will remain without them."—*Engineer.*

"We cannot sufficiently admire the heroic patience of the author, who, in order to prevent error, calculated each result by two different modes, and, before the work was finally placed in the Printers' hands, repeated the operation for a third time, on revising the proofs."—*Engineering.*

JAMES (W. Powell, M.A.):

FROM SOURCE TO SEA: or, Gleanings about Rivers from many Fields. A Chapter in Physical Geography. Cloth elegant, 3/6.

"Excellent reading . . . a book of popular science which deserves an extensive circulation."—*Saturday Review.*

JAMIESON (Andrew, C.E., F.R.S.E., Professor of Engineering, Glasgow and West of Scotland Technical College):

STEAM AND THE STEAM ENGINE (A Text-Book on): Specially arranged for the use of Science and Art, City and Guilds' of London Institute, and other Engineering Students. With 200 Illustrations and Four Folding-Plates. *Fifth Edition.* Crown 8vo. Cloth, 7/6.

"The BEST BOOK yet published for the use of Students."—*Engineer.*

"This is undoubtedly the MOST VALUABLE and MOST COMPLETE hand-book of reference on the subject that now exists."—*Marine Engineer.*

1. STEAM AND THE STEAM ENGINE (An Elementary Manual on), forming an introduction to the larger Work by the same Author. With numerous Illustrations and Examination Questions at the end of each Lecture. *Second Edition.* Crown 8vo. Cloth, 3/6.

2. MAGNETISM AND ELECTRICITY (An Elementary Manual on). With numerous Illustrations and Examination Questions. Part I.—Magnetism. Crown 8vo, 1s.

3. APPLIED MECHANICS (An Elementary Manual on). With Diagrams and Examination Questions. Crown 8vo.

Digitized by Google

MUNRO (John, C. E.) and JAMIESON (Andrew, C.E., F.R.S.E.):

A POCKET-BOOK OF ELECTRICAL RULES AND TABLES, for the use of Electricians and Engineers. Pocket Size. Leather, 8/6. *Sixth Edition, revised and enlarged.* With numerous Diagrams.

*** The SIXTH EDITION has been thoroughly Revised and Enlarged by about 120 pages and 60 new Figures.

"WONDERFULLY PERFECT. . . . Worthy of the highest commendation we can give it."—*Electrician.*

"The STERLING VALUE of Messrs. MUNRO and JAMIESON'S POCKET-BOOK."—*Electrical Review.*

MUNRO (R. D.), STEAM BOILERS: Their Defects, Management, and Construction. A Manual for all concerned in the care of Steam Boilers, but written with a special view to the wants of Boiler-Attendants, Mill-Mechanics, and other Artisans. With Numerous Illustrations. Crown 8vo, Cloth 3/6.

"The volume is a valuable companion for workmen and engineers engaged about Steam Boilers, and ought to be carefully studied, and always at hand."—*Colliery Guardian.*

"The subjects referred to are handled in a trustworthy, clear, and practical manner. . . . The book is VERY USEFUL, especially to steam users, artisans, and young engineers."—*Engineer.*

NAPIER (James, F.R.S.E., F.C.S.):

A MANUAL OF THE ART OF DYEING AND DYEING RECEIPTS. Illustrated by Diagrams and Numerous Specimens of Dyed Cotton, Silk, and Woollen Fabrics. Demy 8vo. *Third Edition, thoroughly revised and greatly enlarged.* Cloth, 21/.

PHILLIPS (J. Arthur, F.R.S., M. Inst. C.E., F.C.S., F.G.S., Ancien Elève de l'Ecole des Mines, Paris):

ELEMENTS OF METALLURGY: a Practical Treatise on the Art of Extracting Metals from their Ores. With over 200 Illustrations, many of which have been reduced from Working Drawings, and two Folding-Plates. Royal 8vo, 848 pages, cloth, 36/. *NEW EDITION by the Author and Mr. H. Bauerman, F.G.S.*

General Contents.

I.—A TREATISE ON FUELS and REFRACTORY MATERIALS.
II.—A Description of the principal MINERALS, with their DISTRIBUTION.
III.—STATISTICS of the amount of each METAL annually produced throughout the World.
IV.—The METHODS of ASSAYING the different ORES, together with the PROCESSES of METALLURGICAL TREATMENT.

"'Elements of Metallurgy' possesses intrinsic merits of the highest degree. Such a work is precisely wanted by the great majority of students and practical workers, and its very compactness is in itself a first-rate recommendation. . . . In our opinion, the BEST WORK EVER WRITTEN ON THE SUBJECT with a view to its practical treatment."—*Westminster Review.*

"The VALUE OF THIS WORK IS ALMOST INESTIMABLE. There can be no question that the amount of time and labour bestowed upon it is enormous. . . . There is certainly no Metallurgical Treatise in the language calculated to prove of such general utility."—*Mining Journal.*

MANY NOTABLE ADDITIONS
WILL BE FOUND IN THE SECTIONS DEVOTED TO
IRON, LEAD, COPPER, SILVER, AND GOLD,
Dealing with New Processes and Development.

Digitized by Google

Demy 8vo, Handsome cloth, 18s.

PHYSICAL GEOLOGY AND PALÆONTOLOGY,

ON THE BASIS OF PHILLIPS.

BY

HARRY GOVIER SEELEY, F.R.S.,

PROFESSOR OF GEOGRAPHY IN KING'S COLLEGE, LONDON.

With Frontispiece in Chromo-Lithography, and Illustrations.

"It is impossible to praise too highly the research which PROFESSOR SEELEY'S 'PHYSICAL GEOLOGY' evidences. IT IS FAR MORE THAN A TEXT-BOOK—it is a DIRECTORY to the Student in prosecuting his researches."—*Extract from the Presidential Address to the Geological Society, 1885, by Rev. Professor Bonney, D.Sc., LL.D., F.R.S.*

"PROFESSOR SEELEY maintains in his 'PHYSICAL GEOLOGY' the high reputation he already deservedly bears as a Teacher. . . . It is difficult, in the space at our command, to do fitting justice to so large a work. . . . The final chapters, which are replete with interest, deal with the Biological aspect of Palæontology. Here we find discussed the origin, the extinction, succession, migration, persistence, distribution, relation, and variation of species —with other considerations, such as the Identification of Strata by Fossils, Homotaxis, Local Faunas, Natural History Provinces, and the relation of Living to Extinct forms."—*Dr. Henry Woodward, F.R.S., in the "Geological Magazine."*

"A deeply interesting volume, dealing with Physical Geology as a whole, and also presenting us with an animated summary of the leading doctrines and facts of Palæontology, as looked at from a modern standpoint."—*Scotsman.*

"PROFESSOR SEELEY'S work includes one of the most satisfactory Treatises on Lithology in the English language. . . . So much that is not accessible in other works is presented in this volume, that no Student of Geology can afford to be without it."—*American Journal of Engineering.*

"Geology from the point of view of Evolution."—*Westminster Review.*

"PROFESSOR SEELEY'S PHYSICAL GEOLOGY is full of instructive matter, whilst the philosophical spirit which it displays will charm many a reader. From early days the author gave evidence of a powerful and eminently original genius. No one has shown more convincingly than the author that, in all ways, the past contains within itself the interpretation of the existing world."—*Annals of Natural History.*

Digitized by Google

Demy 8vo, Handsome cloth, 34s.

STRATIGRAPHICAL GEOLOGY AND PALÆONTOLOGY,

ON

THE BASIS OF PHILLIPS.

BY

ROBERT ETHERIDGE, F.R.S.,

OF THE NATURAL HIST. DEPARTMENT, BRITISH MUSEUM, LATE PALÆONTOLOGIST TO THE GEOLOGICAL SURVEY OF GREAT BRITAIN, PAST PRESIDENT OF THE GEOLOGICAL SOCIETY, ETC.

With Map, Numerous Tables, and Thirty-six Plates.

"In 1854 Prof. JOHN MORRIS published the Second Edition of his 'Catalogue of British Fossils,' then numbering 1,280 genera and 4,000 species. Since that date 3,000 genera and nearly 12,000 new species have been described, thus bringing up the muster-roll of extinct life in the British Islands alone to 3,680 genera and 16,000 known and described species.

"Numerous TABLES of ORGANIC REMAINS have been prepared and brought down to 1884, embracing the accumulated wealth of the labours of past and present investigators during the last thirty years. Eleven of these Tables contain every known British genus, zoologically or systematically placed, with the number of species in each, showing their broad distribution through time. The remaining 105 Tables are devoted to the analysis, relation, historical value, and distribution of specific life through each group of strata. These tabular deductions, as well as the Palæontological Analyses through the text, are, for the first time, fully prepared for English students."—*Extract from Author's Preface.*

*** PROSPECTUS *of the above important work—perhaps the* MOST ELABORATE *of its kind ever written, and one calculated to give a new strength to the study of Geology in Britain—may be had on application to the Publishers.*

It is not too much to say that the work will be found to occupy a place entirely its own, and will become an indispensable guide to every British Geologist.

"No such compendium of geological knowledge has ever been brought together before. *Westminster Review.*

"If PROF. SEELEY'S volume was remarkable for its originality and the breadth of its view Mr. ETHERIDGE fully justifies the assertion made in his preface that his book differs in construction and detail from any known manual. . . . Must take HIGH RANK AMONG WORKS OF REFERENCE."—*Athenæum.*

Digitized by Google

SCIENTIFIC MANUALS

BY

W. J. MACQUORN RANKINE, C.E., LL.D., F.R.S.,

Late Regius Professor of Civil Engineering in the University of Glasgow.

THOROUGHLY REVISED BY W. J. MILLAR, C.E.,

Secretary to the Institute of Engineers and Shipbuilders in Scotland.

In Crown 8vo. Cloth.

I. RANKINE (Prof.): APPLIED MECHANICS: comprising the Principles of Statics and Cinematics, and Theory of Structures, Mechanism, and Machines. With numerous Diagrams. *Twelfth Edition*, 12/6.

"Cannot fail to be adopted as a text-book. . . . The whole of the information is so admirably arranged that there is every facility for reference."—*Mining Journal.*

II. RANKINE (Prof.): CIVIL ENGINEERING: comprising Engineering Surveys, Earthwork, Foundations, Masonry, Carpentry, Metal-work, Roads, Railways, Canals, Rivers, Water-works, Harbours, &c. With numerous Tables and Illustrations. *Seventeenth Edition*, 16/.

"Far surpasses in merit every existing work of the kind. As a manual for the hands of the professional Civil Engineer it is sufficient and unrivalled, and even when we say this, we fall short of that high appreciation of Dr. Rankine's labours which we should like to express."—*The Engineer.*

III. RANKINE (Prof.): MACHINERY AND MILLWORK: comprising the Geometry, Motions, Work, Strength, Construction, and Objects of Machines, &c. Illustrated with nearly 300 Woodcuts. *Sixth Edition*, 12/6.

"Professor Rankine's 'Manual of Machinery and Millwork' fully maintains the high reputation which he enjoys as a scientific author; higher praise it is difficult to award to any book. It cannot fail to be a lantern to the feet of every engineer."—*The Engineer.*

IV. RANKINE (Prof.): THE STEAM ENGINE and OTHER PRIME MOVERS. With Diagram of the Mechanical Properties of Steam, Folding-Plates, numerous Tables and Illustrations. *Twelfth Edition*, 12/6.

V. RANKINE (Prof.): USEFUL RULES and TABLES for Engineers and others. With Appendix: TABLES, TESTS, and FORMULÆ for the use of ELECTRICAL ENGINEERS; comprising Submarine Electrical Engineering, Electric Lighting, and Transmission of Power. By ANDREW JAMIESON, C.E., F.R.S.E. *Seventh Edition*, 10/6.

"Undoubtedly the most useful collection of engineering data hitherto produced."—*Mining Journal.*

"Every Electrician will consult it with profit."—*Engineering.*

VI. RANKINE (Prof.): A MECHANICAL TEXT-BOOK. by Prof. MACQUORN RANKINE and E. F. BAMBER, C.E. With numerous Illustrations. *Third Edition*, 9/.

"The work, as a whole, is very complete, and likely to prove invaluable for furnishing useful and reliable outline of the subjects treated of."—*Mining Journal.*

THE MECHANICAL TEXT-BOOK forms a simple introduction to PROFESSOR RANKINE'S SERIES of MANUALS on ENGINEERING and MECHANICS.

Digitized by Google

PROF. RANKINE'S WORKS—(*Continued*).

VII. RANKINE (Prof.): MISCELLANEOUS SCIENTIFIC PAPERS. Royal 8vo. Cloth, 31/6.

Part I. Papers relating to Temperature, Elasticity, and Expansion of Vapours, Liquids, and Solids. Part II. Papers on Energy and its Transformations. Part III. Papers on Wave-Forms, Propulsion of Vessels, &c. With Memoir by Professor TAIT, M.A. Edited by W. J. MILLAR, C.E. With fine Portrait on Steel, Plates, and Diagrams.

"No more enduring Memorial of Professor Rankine could be devised than the publication of these papers in an accessible form. . . . The Collection is most valuable on account of the nature of his discoveries, and the beauty and completeness of his analysis. . . . The Volume exceeds in importance any work in the same department published in our time."—*Architect*.

By SIR EDWARD REED.

Royal 8vo, Handsome Cloth, 25s.

THE STABILITY OF SHIPS.

BY

SIR EDWARD J. REED, K.C.B., F.R.S., M.P.,

KNIGHT OF THE IMPERIAL ORDERS OF ST. STANILAUS OF RUSSIA; FRANCIS JOSEPH OF AUSTRIA; MEDJIDIE OF TURKEY; AND RISING SUN OF JAPAN; VICE-PRESIDENT OF THE INSTITUTION OF NAVAL ARCHITECTS.

With numerous Illustrations and Tables.

THIS work has been written for the purpose of placing in the hands of Naval Constructors, Shipbuilders, Officers of the Royal and Mercantile Marines, and all Students of Naval Science, a complete Treatise upon the Stability of Ships, and is the only work in the English Language dealing exhaustively with the subject.

The plan upon which it has been designed is that of deriving the fundamental principles and definitions from the most elementary forms of floating bodies, so that they may be clearly understood without the aid of mathematics; advancing thence to all the higher and more mathematical developments of the subject.

The work also embodies a very full account of the historical rise and progress of the Stability question, setting forth the results of the labours of BOUGUER, BERNOULLI, DON JUAN D'ULLOA, EULER, CHAPMAN, and ROMME, together with those of our own Countrymen, ATWOOD, MOSELEY, and a number of others.

The modern developments of the subject, both home and foreign, are likewise treated with much fulness, and brought down to the very latest date, so as to include the labours not only of DAKGNIES, REECH (whose famous *Mémoire*, hitherto a sealed book to the majority of English naval architects, has been reproduced in the present work), RISBEC, FERRANTY, DUPIN, GUYOU, and DAYMARD, in France, but also those of RANKINE, WOOLLEY, ELGAR, JOHN, WHITE, GRAY, DENNY, INGLIS, and BENJAMIN, in Great Britain.

In order to render the work complete for the purposes of the Shipbuilder, whether at home or abroad, the Methods of Calculation introduced by Mr. F. K. BARNES, Mr. GRAY, M. REECH, M. DAYMARD, and Mr. BENJAMIN, are all given separately, illustrated by Tables and worked-out examples. The book contains more than 200 Diagrams, and is illustrated by a large number of actual cases, derived from ships of all descriptions, but especially from ships of the Mercantile Marine.

The work will thus be found to constitute the most comprehensive and exhaustive Treatise hitherto presented to the Profession on the Science of the STABILITY OF SHIPS.

"Sir EDWARD REED'S 'STABILITY OF SHIPS' is INVALUABLE. In it the STUDENT, new to the subject, will find the path prepared for him, and all difficulties explained with the utmost care and accuracy; the SHIP-DRAUGHTSMAN will find all the methods of calculation at present in use fully explained and illustrated, and accompanied by the Tables and Forms employed; the SHIPOWNER will find the variations in the Stability of Ships due to differences in forms and dimensions fully discussed, and the devices by which the state of his ships under all conditions may be graphically represented and easily understood; the NAVAL ARCHITECT will find brought together and ready to his hand, a mass of information which he would otherwise have to seek in an almost endless variety of publications, and some of which he would possibly not be able to obtain at all elsewhere."—*Steamship*.

Digitized by Google

Medium 8vo, Handsome cloth, 25s.

HYDRAULIC POWER

AND

HYDRAULIC MACHINERY.

BY

HENRY ROBINSON, M. INST. C.E., F.G.S.,

FELLOW OF KING'S COLLEGE, LONDON; PROF. OF SURVEYING AND CIVIL ENGINEERING, KING'S COLLEGE, ETC., ETC.

With numerous Woodcuts, and 43 Litho. Plates.

GENERAL CONTENTS.

The Flow of Water under Pressure.
General Observations.
Waterwheels.
Turbines
Centrifugal Pumps.
Water pressure Pumps.
The Accumulator.
Hydraulic Pumping-Engine.
Three-Cylinder Engines and Capstans.
Motors with Variable Power.
Hydraulic Presses and Lifts.
Moveable Jigger Hoist.
Hydraulic Waggon Drop.
The Flow of Solids.
Shop Tools.
Cranes.
Hydraulic Power applied to Bridges.
Dock-Gate Machinery.
Hydraulic Coal-discharging Machines.
Hydraulic Machinery on board Ship.
Hydraulic Pile Driver.
Hydraulic Excavator.
Hydraulic Drill.
Hydraulic Brake.
Hydraulic Gun-Carriages.
Jets.
Hydraulic Ram.
Packing.
Power Co-operation.
Cost of Hydraulic Power.
Tapping Pressure Mains.
Meters.
Waste Water Meter.
Pressure Reducing Valves.
Pressure Regulator.

"A Book of great Professional Usefulness."—*Iron.*

A full Prospectus of the above important work—giving a description of the Plates—may be had on application to the Publishers.

Digitized by Google

SCHWACKHÖFER and BROWNE:

FUEL AND WATER: A Manual for Users of Steam and Water. By Prof. FRANZ SCHWACKHÖFER of Vienna, and WALTER R. BROWNE, M.A., C.E., late Fellow of Trinity College, Cambridge. Demy 8vo, with Numerous Illustrations, 9/.

"The Section on Heat is one of the best and most lucid ever written."—*Engineer.*
"Contains a vast amount of useful knowledge. . . . Cannot fail to be valuable to thousands compelled to use steam power."—*Railway Engineer.*
"Goes into minute details as to how economies may be effected in use of fuel and management of boilers."—*Sheffield Daily Telegraph.*
"Its practical utility is beyond question."—*Mining Journal.*

SEATON (A. E., Lecturer on Marine Engineering at the Royal Naval College, Greenwich, and Member of the Institute of Naval Architects):

A MANUAL OF MARINE ENGINEERING; Comprising the Designing, Construction, and Working of Marine Machinery. With numerous Illustrations. *Eighth Edition.* Demy 8vo. Cloth, 18/.

Opinions of the Press.

"The important subject of Marine Engineering is here treated with the thoroughness that it requires. No department has escaped attention. . . . Gives the results of much close study and practical work."—*Engineering.*
"By far the best MANUAL in existence. . . . Gives a complete account of the methods of solving, with the utmost possible economy, the problems before the Marine Engineer."—*Athenæum.*
"In the three-fold capacity of enabling a Student to learn how to design, construct, and work a modern Marine Steam-Engine, Mr. Seaton's Manual has no rival."—*Times.*
"The Student, Draughtsman, and Engineer will find this work the most valuable Handbook of Reference on the Marine Engine now in existence."—*Marine Engineer.*

SHELTON-BEY (W. Vincent, Foreman to the Imperial Ottoman Gun Factories, Constantinople):

THE MECHANIC'S GUIDE: A Hand-Book for Engineers and Artizans. With Copious Tables and Valuable Recipes for Practical Use. Illustrated. *Second Edition.* Crown 8vo. Cloth, 7/6.

"The MECHANIC'S GUIDE will answer its purpose as completely as a whole series of elaborate text-books."—*Mining Journal.*

TRAILL (Thomas W., F.E.R.N., M.Inst.C.E., Engineer-Surveyor-in-Chief to the Board of Trade):

BOILERS: THEIR CONSTRUCTION AND STRENGTH. A Handbook of Rules, Formulæ, and Tables for the Construction of Boil[illegible] Safety-Valves; Material for Boilers; Tables of Areas, &c. Arra[illegible] in a convenient form for the Use of Engineers, Inspectors, Surve[illegible] Draughtsmen, Boiler-Makers, and Steam-Users. Pocket size, leath[illegible]

"Contains an enormous quantity of information—to be had nowhere [illegible] in a very convenient form. It is admirably printed, and reflects credit on [illegible] *Engineer.*
"Will prove a welcome and valuable addition to the literature of t[illegible] We can strongly recommend Mr. Traill's book as being the most c[illegible] practical, and most recent work on Boilers."—*Marine Engineer.*
"Will prove INVALUABLE to the Engineer and Practical Boiler-[illegible] *Engineer.*

Digitized by Google

OFFICIAL YEAR-BOOK

OF THE

SCIENTIFIC AND LEARNED SOCIETIES OF GREAT BRITAIN AND IRELAND. PRICE 7/6.

COMPILED FROM OFFICIAL SOURCES. SIXTH ANNUAL ISSUE.

Comprising (together with other Official Information) LISTS of the PAPERS read during 1888 before the ROYAL SOCIETIES of LONDON and EDINBURGH, the ROYAL DUBLIN SOCIETY, the BRITISH ASSOCIATION, and all the LEADING SOCIETIES throughout the Kingdom engaged in the following Departments of Research:—

§ 1. Science Generally: *i.e.*, Societies occupying themselves with several Branches of Science, or with Science and Literature jointly.
§ 2. Mathematics and Physics.
§ 3. Chemistry and Photography.
§ 4. Geology, Geography, and Mineralogy.
§ 5. Biology, including Microscopy and Anthropology.
§ 6. Economic Science and Statistics.
§ 7. Mechanical Science and Architecture.
§ 8. Naval and Military Science.
§ 9. Agriculture and Horticulture.
§ 10. Law.
§ 11. Medicine.
§ 12. Literature.
§ 13. Psychology.
§ 14. Archæology.

"The YEAR-BOOK OF SOCIETIES is a Record which ought to be of the greatest use for the progress of Science."—*Sir Lyon Playfair, F.R.S., K.C.B., M.P., Past-President of the British Association.*

"It goes almost without saying that a Handbook of this subject will be in time one of the most generally useful works for the library or the desk."—*The Times.*

"The YEAR-BOOK OF SOCIETIES meets an obvious want, and promises to be a valuable work of reference."—*Athenæum.*

"The YEAR-BOOK OF SCIENTIFIC AND LEARNED SOCIETIES meets a want, and is therefore sure of a welcome."—*Westminster Review.*

"In the YEAR-BOOK OF SOCIETIES we have the FIRST ISSUE of what is, without doubt, a very useful work."—*Spectator.*

"The YEAR-BOOK OF SOCIETIES fills a very real want. The volume will become a Scientific Directory, chronicling the work and discoveries of the year, and enabling the worker in one branch to try his hand in all that interests him in kindred lines of research. We trust that it will meet with an encouraging reception."—*Engineering.*

"The OFFICIAL YEAR-BOOK OF SOCIETIES, which has been prepared to meet a want long felt by scientific workers of a Representative Book, will form a yearly record of Scientific Progress, and a Handbook of Reference. . . . It is carefully printed, and altogether well got up."—*Public Opinion.*

Copies of the FIRST ISSUE, giving an Account of the History, Organisation, and Conditions of Membership of the various Societies [with Appendix on the Leading Scientific Societies throughout the world], and forming the groundwork of the Series, may still be had, price 7/6. *Also Copies of the following Issues.*

The YEAR-BOOK OF SOCIETIES forms a complete INDEX TO THE SCIENTIFIC WORK of the year in the various Departments. It is used as a ready HANDBOOK in all our great SCIENTIFIC CENTRES, MUSEUMS, and LIBRARIES throughout the Kingdom, and will, without doubt, become an INDISPENSABLE BOOK OF REFERENCE to every one engaged in Scientific Work.

"We predict that the YEAR-BOOK OF SOCIETIES will speedily become one of those Year-Books WHICH IT WOULD BE IMPOSSIBLE TO DO WITHOUT."—*Bristol Mercury.*

Digitized by Google

EDUCATIONAL WORKS.

*** *Specimen Copies of all the Educational Works published by Messrs. Charles Griffin and Company may be seen at the Libraries of the College of Preceptors, South Kensington Museum, and Crystal Palace; also at the depôts of the Chief Educational Societies.*

BRYCE (Archibald Hamilton, D.C.L., LL.D., Senior Classical Moderator in the University of Dublin):

THE WORKS OF VIRGIL. Text from HEYNE and WAGNER. English Notes, original, and selected from the leading German and English Commentators. Illustrations from the antique. Complete in One Volume. *Fourteenth Edition.* Fcap 8vo. Cloth, 6/.

Or, in Three Parts:

Part I. BUCOLICS and GEORGICS, . . 2/6.
Part II. THE ÆNEID, Books I.-VI., . 2/6.
Part III. THE ÆNEID, Books VII.-XII., . 2/6.

"Contains the pith of what has been written by the best scholars on the subject. . . . The notes comprise everything that the student can want."—*Athenæum.*
"The most complete, as well as elegant and correct edition of Virgil ever published in this country."—*Educational Times.*
"The best commentary on Virgil which a student can obtain."—*Scotsman.*

COBBETT (William): ENGLISH GRAMMAR,

in a Series of Letters, intended for the use of Schools and Young Persons in general. With an additional chapter on Pronunciation, by the Author's Son, JAMES PAUL COBBETT. *The only correct and authorised Edition.* Fcap 8vo. Cloth, 1/6.

"A new and cheapened edition of that most excellent of all English Grammars, William Cobbett's. It contains new copyright matter, as well as includes the equally amusing and instructive 'Six Lessons intended to prevent Statesmen from writing in an awkward manner.'"—*Atlas.*

COBBETT (William): FRENCH GRAMMAR.

Fifteenth Edition. Fcap 8vo. Cloth, 3/6.

"Cobbett's 'French Grammar' comes out with perennial freshness. There are few grammars equal to it for those who are learning, or desirous of learning, French without a teacher. The work is excellently arranged, and in the present edition we note certain careful and wise revisions of the text."—*School Board Chronicle.*

"Business men commencing the study of French will find this treatise one of the best aids. . . . It is largely used on the Continent."—*Midland Counties Herald.*

COBBIN'S MANGNALL: MANGNALL

HISTORICAL AND MISCELLANEOUS QUESTIONS, for the of Young People. By RICHMAL MANGNALL. Greatly enlarged, corrected, and continued to the present time, by INGRAM COBBIN, M. *Fifty-fourth Thousand. New Illustrated Edition.* 12mo. Cloth, 4/.

Digitized by Google

COLERIDGE (Samuel Taylor): A DISSERTATION ON THE SCIENCE OF METHOD. (*Encyclopædia Metropolitana.*) With a Synopsis. *Ninth Edition.* Cr. 8vo. Cloth, 2/.

CRAIK'S ENGLISH LITERATURE.

A COMPENDIOUS HISTORY OF ENGLISH LITERATURE AND OF THE ENGLISH LANGUAGE FROM THE NORMAN CONQUEST.

With numerous Specimens. By GEORGE LILLIE CRAIK, LL.D., late Professor of History and English Literature, Queen's College, Belfast. *New Edition.* In two vols. Royal 8vo. Handsomely bound in cloth, 25/.

GENERAL CONTENTS.

INTRODUCTORY.

I.—THE NORMAN PERIOD—The Conquest.
II.—SECOND ENGLISH—Commonly called Semi-Saxon.
III.—THIRD ENGLISH—Mixed, or Compound English.
IV.—MIDDLE AND LATTER PART OF THE SEVENTEENTH CENTURY.
V.—THE CENTURY BETWEEN THE ENGLISH REVOLUTION AND THE FRENCH REVOLUTION.
VI.—THE LATTER PART OF THE EIGHTEENTH CENTURY.
VII.—THE NINETEENTH CENTURY (*a*) THE LAST AGE OF THE GEORGES.
(*b*) THE VICTORIAN AGE.

With numerous Excerpts and Specimens of Style.

"Anyone who will take the trouble to ascertain the fact, will find how completely even our great poets and other writers of the last generation have already faded from the view of the present, with the most numerous class of the educated and reading public. Scarcely anything is generally read except the publications of the day. YET NOTHING IS MORE CERTAIN THAN THAT NO TRUE CULTIVATION CAN BE SO ACQUIRED. This is the extreme case of that entire ignorance of history which has been affirmed, not with more point than truth, to leave a person always a child. . . . The present work combines the HISTORY OF THE LITERATURE with the HISTORY OF THE LANGUAGE. The scheme of the course and revolutions of the language which is followed here is extremely simple, and resting not upon arbitrary, but upon natural or real distinctions, gives us the only view of the subject that can claim to be regarded as of a scientific character."—*Extract from the Author's Preface.*

"Professor Craik has succeeded in making a book more than usually agreeable."—*The Times.*

CRAIK (Prof.): A MANUAL OF ENGLISH LITERATURE,

for the use of Colleges, Schools, and Civil Service Examinations. Selected from the larger work, by Dr. CRAIK. *Tenth Edition.* With an Additional Section on Recent Literature, by HENRY CRAIK, M.A., Author of "A Life of Swift." Crown 8vo. Cloth, 7/6.

"A Manual of English Literature from so experienced and well-read a scholar as Professor Craik needs no other recommendation than the mention of its existence."—*Spectator.*

"This augmented effort will, we doubt not, be received with decided approbation by those who are entitled to judge, and studied with much profit by those who want to learn. . . . If our young readers will give healthy perusal to Dr. Craik's work, they will greatly benefit by the wide and sound views he has placed before them."—*Athenæum.*

"The preparation of the NEW ISSUE has been entrusted to Mr. HENRY CRAIK, Secretary to the Scotch Education Department, and well known in literary circles as the author of the latest and best Life of Swift. . . . A Series of TEST QUESTIONS is added, which must prove of great service to Students studying alone."—*Glasgow Herald.*

Digitized by Google

WORKS BY REV. C. T. CRUTTWELL, M.A.,

Late Fellow of Merton College, Oxford.

I.—A HISTORY OF ROMAN LITERATURE: From the Earliest Period to the Times of the Antonines. *Fourth Edition.* Crown 8vo. Cloth, 8/6.

"Mr. CRUTTWELL has done a real service to all Students of the Latin Language and Literature. . . . Full of good scholarship and good criticism."—*Athenæum.*

"A most serviceable—indeed, indispensable—guide for the Student. . . . The 'general reader' will be both charmed and instructed."—*Saturday Review.*

"The Author undertakes to make Latin Literature interesting, and he has succeeded. There is not a dull page in the volume."—*Academy.*

"The great merit of the work is its fulness and accuracy."—*Guardian.*

"This elaborate and careful work, in every respect of high merit. Nothing at all equal to it has hitherto been published in England."—*British Quarterly Review.*

Companion Volume. Second Edition.

II.—SPECIMENS OF ROMAN LITERATURE: From the Earliest Period to the Times of the Antonines. Passages from the Works of Latin Authors, Prose Writers, and Poets:

Part I.—ROMAN THOUGHT: Religion, Philosophy and Science, Art and Letters, 6/.

Part II.—ROMAN STYLE: Descriptive, Rhetorical, and Humorous Passages, 5/.

Or in One Volume complete, 10/6.

Edited by C. T. CRUTTWELL, M.A., Merton College, Oxford; and PEAKE BANTON, M.A., some time Scholar of Jesus College, Oxford.

"'Specimens of Roman Literature' marks a new era in the study of Latin."—*English Churchman.*

"A work which is not only useful but necessary. . . . The plan gives it a standing-ground of its own. . . . The sound judgment exercised in plan and selection calls for hearty commendation."—*Saturday Review.*

"It is hard to conceive a completer or handier repertory of specimens of Latin thought and style."—*Contemporary Review.*

*** KEY to PART II., PERIOD II. (being a complete TRANSLATION of the 85 Passages composing the Section), by THOS. JOHNSTON, M.A., may now be had (by Tutors and Schoolmasters only) on application to the Publishers. Price 2/6.

III.—A HISTORY OF EARLY CHRISTIAN LITERATURE. For the use of Students and General Readers. 8vo, Handsome Cloth. [*In Preparation.*

CURRIE (Joseph, formerly Head Classical Master of Glasgow Academy):

THE WORKS OF HORACE: Text from ORELLIUS. English Notes, original, and selected from the best Commentators. Illustrations from the antique. Complete in One Volume. Fcap 8vo. Cloth, 5/.

Or in Two Parts:

Part I.—CARMINA, ... 3/.

Part II.—SATIRES AND EPISTLES, . . 3/.

"The notes are excellent and exhaustive."—*Quarterly Journal of Education.*

EXTRACTS FROM CÆSAR'S COMMENTARIES; containing his description of Gaul, Britain, and Ger

With Notes, Vocabulary, &c. Adapted for Young Scholars. *Edition.* 18mo. Cloth, 1/6.

Digitized by Google

DOERING (E.) AND GRÆME (E.):

HELLAS: AN INTRODUCTION TO GREEK ANTIQUITIES, comprising the Geography, Religion, and Myths, History, Art, and Culture of Old Greece. On the basis of the German work by E. Doering, with additions by Elliott Græme. In large 8vo, with Map and Illustrations.

PART I.—The Land and the People: the Religion and Myths of Old Greece.

*** In the English version of Mr. Doering's work, the simple and interesting style of the original—written for young Students—has been retained; but, throughout, such additions and emendations have been made, as render the work suitable for more advanced Students, and for all who desire to obtain, within moderate compass, more than a superficial acquaintance with the great People whose genius and culture have so largely influenced our own. The results of the latest researches by Dr. SCHLIEMANN, MM. FOUQUÉ, CARAPANOS, and others, are incorporated.

D'ORSEY (Rev. Alex. J. D., B.D., Corpus Christi Coll., Cambridge, Lecturer at King's College, London):

SPELLING BY DICTATION: Progressive Exercises in English Orthography, for Schools and Civil Service Examinations. *Sixteenth Thousand.* 18mo. Cloth, 1/.

FLEMING (William, D.D., late Professor of Moral Philosophy in the University of Glasgow):

THE VOCABULARY OF PHILOSOPHY: PSYCHOLOGICAL, ETHICAL, AND METAPHYSICAL. With Quotations and References for the Use of Students. Revised and Edited by HENRY CALDERWOOD, LL.D., Professor of Moral Philosophy in the University of Edinburgh. *Fourth Edition, enlarged.* Crown 8vo. Cloth, 10/6.

"The additions by the Editor bear in their clear, concise, vigorous expression, the stamp of his powerful intellect. and thorough command of our language. More than ever, the work is now likely to have a prolonged and useful existence, and to facilitate the researches of those entering upon philosophic studies."—*Weekly Review.*

JEVONS (Frank B., M.A., University of Durham, sometime Scholar of Wadham College, Oxford):

A HISTORY OF GREEK LITERATURE, from the Earliest Times to the Death of Demosthenes. *Second Edition.* Crown 8vo. Cloth, 8/6.

"It is beyond all question the BEST HISTORY of Greek literature that has hitherto been published."—*Spectator.*

"An admirable text-book."—*Westminster Review.*

"Mr. Jevons' work supplies a real want."—*Contemporary Review.*

"Mr. Jevons' work is distinguished by the Author's THOROUGH ACQUAINTANCE with THE OLD WRITERS, and his DISCRIMINATING USE of the MODERN LITERATURE bearing upon the subject. . . . His great merit lies in his EXCELLENT EXPOSITION of the POLITICAL AND SOCIAL CAUSES concerned in the development of the Literature of Greece."—*Berlin Philologische Wochenschrift.*

"As a Text-Book, Mr. Jevons' work from its excellence deserves to SERVE AS A MODEL."—*Deutsche Litteraturzeitung.*

——— AND DR. O. SCHRADER:

THE PREHISTORIC ANTIQUITIES OF THE ARYAN PEOPLES (See p. 30).

Digitized by Google

McBURNEY (Isaiah, LL.D.): EXTRACTS FROM OVID'S METAMORPHOSES. With Notes, Vocabulary, &c. Adapted for Young Scholars. *Third Edition.* 18mo. Cloth, 1/6.

MENTAL SCIENCE: S. T. COLERIDGE'S celebrated Essay on METHOD; Archbishop WHATELY'S Treatises on LOGIC and RHETORIC. *Tenth Edition.* Crown 8vo. Cloth, 5/.

MILLER (W. Galbraith, M.A., LL.B., Lecturer on Public Law, including Jurisprudence and International Law, in the University of Glasgow):

THE PHILOSOPHY OF LAW, LECTURES ON. Designed mainly as an Introduction to the Study of International Law. In 8vo. Handsome Cloth, 12/. *Now Ready.*

"Mr. MILLER'S 'PHILOSOPHY OF LAW' bears upon it the stamp of a wide culture and of an easy acquaintanceship with what is best in modern continental speculation. . . . Interesting and valuable, because suggestive."—*Journal of Jurisprudence.*

WORKS BY WILLIAM RAMSAY, M.A.,

Trinity College, Cambridge, late Professor of Humanity in the University of Glasgow.

A MANUAL OF ROMAN ANTIQUITIES. For the use of Advanced Students. With Map, 130 Engravings, and very copious Index. *Fourteenth Edition.* Crown 8vo. Cloth, 8/6.

"Comprises all the results of modern improved scholarship within a moderate compass."—*Athenæum.*

——— AN ELEMENTARY MANUAL OF ROMAN ANTIQUITIES. Adapted for Junior Classes. With numerous Illustrations. *Eighth Edition.* Crown 8vo. Cloth, 4/.

——— A MANUAL OF LATIN PROSODY, Illustrated by Copious Examples and Critical Remarks. For the use of Advanced Students. *Seventh Edition.* Crown 8vo. Cloth, 5/.

"There is no other work on the subject worthy to compete with it."—*Athenæum.*

——— AN ELEMENTARY MANUAL OF LATIN PROSODY. Adapted for Junior Classes. Crown 8vo. C[illegible]

Digitized by Google

THE SCHOOL BOARD READERS:

A SERIES OF STANDARD READING-BOOKS.

EDITED BY A FORMER H.M. INSPECTOR OF SCHOOLS.

Adopted by many School Boards throughout the Country.

Elementary Reader, Part I.,	1d.	Standard III., . .	9d.
,, ,, ,, II.,	2d.	,, IV., .	1s. 0d.
Standard I., . . .	4d.	,, V., . .	1s. 6d.
,, II., . . .	6d.	,, VI., . .	2s. 0d.

Key to the Questions in Arithmetic in 2 Parts, each 6d.

"THE BOOKS GENERALLY ARE VERY MUCH WHAT WE SHOULD DESIRE."—*Times.*
"The Series is DECIDEDLY ONE OF THE BEST that have yet appeared."—*Athenæum.*

THE SCHOOL BOARD MANUALS

ON THE SPECIFIC SUBJECTS OF THE REVISED CODE,

BY A FORMER H.M. INSPECTOR OF SCHOOLS,

Editor of the "School Board Readers."

64 pages, stiff wrapper. 6*d.*; neat cloth, 7*d.* each.

I.—ALGEBRA.
II.—ENGLISH HISTORY.
III.—GEOGRAPHY.
IV.—PHYSICAL GEOGRAPHY.
V.—ANIMAL PHYSIOLOGY. (Well Illustrated with good Engravings.)
VI.—BIBLE HISTORY. (Entirely free from any Denominational bias.)

SCHRADER (Dr. O.) and JEVONS (F. B., M.A.):

THE PREHISTORIC ANTIQUITIES OF THE ARYAN PEOPLES: Translated from the SECOND GERMAN EDITION by F. B. Jevons, M.A., author of "*A History of Greek Literature.*"

*** The Publishers have pleasure in announcing that to the English Translation of Dr. Schrader's well-known "*Sprachvergleichung und Urgeschichte*"—a work which commends itself alike to the Scholar by its thoroughness and the moderation of its tone, and to the General Reader by its clear and interesting style—an INTRODUCTION will be furnished by the AUTHOR.

SENIOR (Nassau William, M.A., late Professor of Political Economy in the University of Oxford):

A TREATISE ON POLITICAL ECONOMY: the Science which treats of the Nature, the Production, and the Distribution of Wealth. *Sixth Edition.* Crown 8vo. Cloth. (*Encyclopædia Metropolitana*), 4/.

THOMSON (James): THE SEASONS. With

an Introduction and Notes by ROBERT BELL, Editor of the "Annotated Series of British Poets." *Third Edition.* Fcap 8vo. Cloth, 1/6.

"An admirable introduction to the study of our English classics."

WHATELY (Archbishop): LOGIC—A Treatise

on. With Synopsis and Index. (*Encyclopædia Metropolitana*), 3/.

——— RHETORIC—A Treatise on. With

Synopsis and Index. (*Encyclopædia Metropolitana*), 3/6.

Digitized by Google

WORKS IN GENERAL LITERATURE.

BELL (Robert, Editor of the "Annotated Series of British Poets"):

GOLDEN LEAVES FROM THE WORKS OF THE POETS AND PAINTERS. Illustrated by Sixty-four superb Engravings on Steel, after Paintings by DAVID ROBERTS, STANFIELD, LESLIE, STOTHARD, HAYDON, CATTERMOLE, NASMYTH, Sir THOMAS LAWRENCE, and many others, and engraved in the first style of Art by FINDEN, GREATBACH, LIGHTFOOT, &c. *Second Edition.* 4to. Cloth gilt, 21/.

"'Golden Leaves' is by far the most important book of the season. The Illustrations are really works of art, and the volume does credit to the arts of England."—*Saturday Review.*

"The Poems are selected with taste and judgment."—*Times.*

"The engravings are from drawings by Stothard, Newton, Danby, Leslie, and Turner, and it is needless to say how charming are many of the above here given."—*Athenæum.*

THE WORKS OF WILLIAM COBBETT.

THE ONLY AUTHORISED EDITIONS.

COBBETT (William): ADVICE TO YOUNG

Men and (incidentally) to Young Women, in the Middle and Higher Ranks of Life. In a Series of Letters addressed to a Youth, a Bachelor, a Lover, a Husband, a Father, a Citizen, and a Subject. *New Edition. With admirable Portrait on Steel.* Fcap 8vo. Cloth, 2/6.

"Cobbett's great qualities were immense vigour, resource, energy, and courage, joined to a force of understanding, a degree of logical power, and above all a force of expression, which have rarely been equalled. . . . He was the most English of Englishmen."—*Saturday Review.*

"With all his faults, Cobbett's style is a continual refreshment to the lover of 'English undefiled.'"—*Pall Mall Gazette.*

—— COTTAGE ECONOMY: Containing

information relative to the Brewing of Beer, Making of Bread, Keeping of Cows, Pigs, Bees, Poultry, &c.; and relative to other matters deemed useful in conducting the affairs of a Poor Man's Family. *Eighth Edition*, revised by the Author's Son. Fcap 8vo. Cloth, 2/6.

Digitized by Google

WILLIAM COBBETT'S WORKS—*(Continued).*

COBBETT (Wm.): EDUCATIONAL WORKS.

(See page 25.)

——— A LEGACY TO LABOURERS: An

Argument showing the Right of the Poor to Relief from the Land. With a Preface by the Author's Son, JOHN M. COBBETT, late M.P. for Oldham. *New Edition.* Fcap 8vo. Cloth, 1/6.

"The book cannot be too much studied just now."—*Nonconformist.*

"Cobbett was, perhaps, the ablest Political writer England ever produced, and his influence as a Liberal thinker is felt to this day. . . . It is a real treat to read his strong racy language."—*Public Opinion.*

——— A LEGACY TO PARSONS: Or, have the

Clergy of the Established Church an Equitable Right to Tithes and Church Property? *New Edition.* Fcap 8vo. Cloth, 1/6.

"The most powerful work of the greatest master of political controversy this country has ever produced."—*Pall Mall Gazette.*

DALGAIRNS (Mrs.): THE PRACTICE OF

COOKERY, adapted to the business of Every-day Life. By Mrs. DALGAIRNS. *he best book for Scotch dishes.* About Fifty new Recipes have been added to the present Edition, but only such as the Author has had adequate means of ascertaining to be valuable. *Seventeenth Edition.* Fcap 8vo. Cloth. (*In preparation.*)

GILMER'S INTEREST TABLES; Tables for

Calculation of Interest, on any sum, for any number of days, at ½, 1, 1½, 2, 2½, 3, 3½, 4, 4½, 5 and 6 per Cent. By ROBERT GILMER. Corrected and enlarged. *Eleventh Edition.* 12mo. Cloth, 5/.

GRÆME (Elliott): BEETHOVEN: a Memoir.

With Portrait, Essay, and Remarks on the Pianoforte Sonatas, with Hints to Students, by DR. FERDINAND HILLER, of Cologne. *Third Edition.* Crown 8vo. Cloth gilt, elegant, 5/.

"This elegant and interesting Memoir. . . . The newest, prettiest, and most readable sketch of the immortal Master of Music."—*Musical Standard.*

"A gracious and pleasant Memorial of the Centenary."—*Spectator.*

"This delightful little book — concise, sympathetic, judicious." — *Manchester Examiner.*

"We can, without reservation, recommend it as the most trustworthy and the pleasantest Memoir of Beethoven published in England."—*Observer.*

"A most readable volume, which ought to find a place in the library of every admirer of the great Tone-Poet."—*Edinburgh Daily Review.*

——— A NOVEL WITH TWO HEROES.

Second Edition. In 2 vols. Post 8vo. Cloth, 21/.

"A decided literary success."—*Athenæum.*

"Clever and amusing . . . above the average even of good novels . . . free from sensationalism, but full of interest . . . touches the deeper chords of life . . . delineation of character remarkably good."—*Spectator.*

"Superior in all respects to the common run of novels."—*Daily News.*

"A story of deep interest. . . . The dramatic scenes are powerful almost to painfulness in their intensity."—*Scotsman.*

Digitized by Google

THE EMERALD SERIES OF STANDARD AUTHORS.

Illustrated by Engravings on Steel, after STOTHARD, LESLIE, DAVID ROBERTS, STANFIELD, Sir THOMAS LAWRENCE, CATTERMOLE, &c., Fcap 8vo. Cloth, gilt.

Particular attention is requested to this very beautiful series. The delicacy of the engravings, the excellence of the typography, and the quaint antique head and tail pieces, render them the most beautiful volumes ever issued from the press of this country, and now, unquestionably, the cheapest of their class.

BURNS' (Robert) SONGS AND BALLADS.

With an Introduction on the Character and Genius of Burns. By THOMAS CARLYLE. Carefully printed in antique type, and illustrated with Portrait and beautiful Engravings on Steel. *Second Thousand.* Cloth, gilt edges, 3/.

BYRON (Lord): CHILDE HAROLD'S PILGRIMAGE.

With Memoir by Professor SPALDING. Illustrated with Portrait and Engravings on Steel, by GREATBACH, MILLER, LIGHTFOOT, &c., from Paintings by CATTERMOLE, Sir T. LAWRENCE, H. HOWARD, and STOTHARD. Beautifully printed on toned paper. *Third Thousand.* Cloth, gilt edges, 3/.

CAMPBELL (Thomas): THE PLEASURES OF HOPE.

With Introductory Memoir by the Rev. CHARLES ROGERS, LL.D., and several Poems never before published. Illustrated with Portrait and Steel Engravings. *Second Thousand.* Cloth, gilt edges, 3/.

CHATTERTON'S (Thomas) POETICAL WORKS.

With an Original Memoir by FREDERICK MARTIN, and Portrait. Beautifully illustrated on Steel, and elegantly printed. *Fourth Thousand.* Cloth, gilt edges, 3/.

GOLDSMITH'S (Oliver) POETICAL WORKS.

With Memoir by Professor SPALDING. Exquisitely illustrated with Steel Engravings. *New Edition.* Printed on superior toned paper. *Seventh Thousand.* Cloth, gilt edges, 3/.

GRAY'S (Thomas) POETICAL WORKS.

With Life by the Rev. JOHN MITFORD, and Essay by the EARL of CARLISLE. With Portrait and numerous Engravings on Steel and Wood. Elegantly printed on toned paper. *Eton Edition, with the Latin Poems. Sixth Thousand.* Cloth, gilt edges, 5/.

HERBERT'S (George) POETICAL WORKS.

With Memoir by J. NICHOL, B.A., Oxon, Prof. of English Literature in the University of Glasgow. Edited by CHARLES COWDEN CLARKE. Antique headings to each page. *Second Thousand.* Cloth, gilt edges, 3/.

KEBLE (Rev. John): THE CHRISTIAN YEAR.

With Memoir by W. TEMPLE, Portrait, and Eight beautiful Engravings on Steel. *Second Thousand.*

Cloth, gilt edges,	5/.
Morocco, elegant,	10/6.
Malachite,	12/6.

Digitized by Google

THE EMERALD SERIES—(*Continued*).

POE'S (Edgar Allan) COMPLETE POETICAL WORKS.

Edited, with Memoir, by JAMES HANNAY. Full-page Illustrations after WEHNERT, WEIR, &c. Toned paper. *Thirteenth Thousand.*

Cloth, gilt edges, ... 3/.
Malachite, ... 10/6.

Other volumes in preparation.

MACKEY'S FREEMASONRY:

A LEXICON OF FREEMASONRY. Containing a definition of its Communicable Terms, Notices of its History, Traditions, and Antiquities, and an Account of all the Rites and Mysteries of the Ancient World. By ALBERT G. MACKEY, M.D., Secretary-General of the Supreme Council of the U.S., &c. *Eighth Edition*, thoroughly revised with APPENDIX by Michael C. Peck, Prov. Grand Secretary for N. and E. Yorkshire. Handsomely bound in cloth, 6/.

"Of MACKEY'S LEXICON it would be impossible to speak in too high terms; suffice it to say, that, in our opinion, it ought to be in the hands of every Mason who would thoroughly understand and master our noble Science. . . . No Masonic Lodge or Library should be without a copy of this most useful work."—*Masonic News.*

HENRY MAYHEW'S CELEBRATED WORK ON THE STREET-FOLK OF LONDON.

LONDON LABOUR AND THE LONDON POOR:

A Cyclopædia of the Condition and Earnings of *those that will work and those that cannot work.* By HENRY MAYHEW. With many full-page Illustrations from Photographs. In three vols. Demy 8vo. Cloth. Each vol. 4/6.

"Every page of the work is full of valuable information, laid down in so interesting a manner that the reader can never tire."—*Illustrated London News.*

"Mr. Henry Mayhew's famous record of the habits, earnings, and sufferings of the London poor."—*Lloyd's Weekly London Newspaper.*

"This remarkable book, in which Mr. Mayhew gave the better classes their first real insight into the habits, modes of livelihood, and current of thought of the London poor."—*The Patriot.*

The Extra Volume.

LONDON LABOUR AND THE LONDON POOR:

Those that will not work. Comprising the Non-workers, by HENRY MAYHEW; Prostitutes, by BRACEBRIDGE HEMYNG; Thieves, by JOHN BINNY; Beggars, by ANDREW HALLIDAY. With an Introductory Essay on the Agencies at Present in Operation in the Metropolis for the Suppression of Crime and Vice, by the Rev. WILLIAM TUCKNISS, B.A., Chaplain to the Society for the Rescue of Young Women and Children. With Illustrations of Scenes and Localities. In one large vol. Royal 8vo. Cloth, 10/6.

"The work is full of interesting matter for the casual reader, while the philanthropist and the philosopher will find details of the greatest import."—*City Press.*

Digitized by Google

Mr. MAYHEW'S LONDON LABOUR—(*Continued*).

Companion volume to the preceding.

THE CRIMINAL PRISONS OF LONDON,

and Scenes of Prison Life. By HENRY MAYHEW and JOHN BINNY. Illustrated by nearly two hundred Engravings on Wood, principally from Photographs. In one large vol. Imperial 8vo. Cloth, 10/6.

This volume concludes Mr. Henry Mayhew's account of his researches into the crime and poverty of London. The amount of labour of one kind or other, which the whole series of his publications represents, is something almost incalculable.

*** This celebrated Record of Investigations into the condition of the Poor of the Metropolis, undertaken from philanthropic motives by Mr. HENRY MAYHEW, first gave the wealthier classes of England some idea of the state of Heathenism, Degradation, and Misery in which multitudes of their poorer brethren languished. His revelations created, at the time of their appearance, universal horror and excitement—that a nation, professedly *Christian*, should have in its midst a vast population, so sunk in ignorance, vice, and very hatred of Religion, was deemed incredible, until further examination established the truth of the statements advanced. The result is well known. The London of Mr. MAYHEW will, happily, soon exist only in his pages. To those who would appreciate the efforts already made among the ranks which recruit our "dangerous" classes, and who would learn what yet remains to be done, the work will afford enlightenment, not unmingled with surprise.

POE'S (Edgar Allan) COMPLETE POETICAL

WORKS. Edited, with Memoir, by JAMES HANNAY. Full-page Illustrations after WEHNERT, WEIR, and others. In paper wrapper. Illustrated, 1/6.

SOUTHGATE (Mrs. Henry): THE CHRISTIAN LIFE: Thoughts in Prose and Verse from the Best Writers of all Ages. Selected and Arranged for Every Day in the Year. *Second Edition.* Cloth Elegant, ... 5/.
Morocco Antique, ... 10/6.

THOMSON (Spencer, M.D., L.R.C.S., Edinburgh,

and J. C. STEELE, M.D., of Guy's Hospital):

DOMESTIC MEDICINE AND HOUSEHOLD SURGERY (A Dictionary of). Thoroughly Revised and in part Re-Written by the Editors. With a Chapter on the Management of the Sick-room, and many Hints for the Diet and Comfort of Invalids. With many new En-
gr... *Twenty-fifth Edition.* Re... Cloth, 10/6. (See page 3
c...

Digitized by Google

MR. SOUTHGATE'S WORKS.

"No one who is in the habit of writing and speaking much on a variety of subjects can afford to dispense with Mr. SOUTHGATE'S WORKS."—*Glasgow News.*

FIRST SERIES—THIRTY-FOURTH EDITION. SECOND SERIES—NINTH EDITION.

MANY THOUGHTS OF MANY MINDS:

Selections and Quotations from the best Authors. Compiled and Analytically Arranged by

HENRY SOUTHGATE.

In Square 8vo, elegantly printed on Toned Paper.

Presentation Edition, Cloth and Gold, ...	Each Vol. 12/6.
Library Edition, Roxburghe, ...	,, 14/.
Ditto, Morocco Antique, ...	,, 21/.

Each Series complete in itself, and sold separately.

"The produce of years of research."—*Examiner.*

"A MAGNIFICENT GIFT-BOOK, appropriate to all times and seasons."—*Freemasons Magazine.*

"Not so much a book as a library."—*Patriot.*

"Preachers and Public Speakers will find that the work has special uses for them."—*Edinburgh Daily Review.*

BY THE SAME AUTHOR.

Now Ready, THIRD EDITION.

SUGGESTIVE THOUGHTS ON RELIGIOUS SUBJECTS:

A Dictionary of Quotations and Selected Passages from nearly 1,000 of the best Writers, Ancient and Modern.

Compiled and Analytically Arranged by HENRY SOUTHGATE. In Square 8vo, elegantly printed on toned paper.

Presentation Edition, Cloth Elegant, ...	10/6.
Library Edition, Roxburghe, ...	12/.
Ditto, Morocco Antique, ...	20/.

"The topics treated of are as wide as our Christianity itself: the writers quoted from, of every Section of the one Catholic Church of JESUS CHRIST."—*Author's Preface.*

"This is another of Mr. Southgate's most valuable volumes. . . . The mission which the Author is so successfully prosecuting in literature is not only highly beneficial, but necessary in this age. . . . If men are to make any acquaintance at all with the great minds of the world, they can only do so with the means which our Author supplies."—*Homilist.*

"A casket of gems."—*English Churchman.*

"Mr. Southgate's work has been compiled with a great deal of judgment, and it will, I trust, be extensively useful."—*Rev. Canon Liddon, D.D., D.C.L.*

"Many a busy Christian teacher will be thankful to Mr. Southgate for having unearthed so many rich gems of thought; while many outside the ministerial circle will obtain stimulus, encouragement, consolation, and counsel, within the pages of this handsome volume."—*Nonconformist.*

"Mr. SOUTHGATE is an indefatigable labourer in a field which he has made peculiarly his own. . . . The labour expended on 'Suggestive Thoughts' must have been immense, and the result is as nearly perfect as human fallibility can make it. . . . Apart from the selections it contains, the book is of value as an index to theological writings. As a model of judicious, logical, and suggestive treatment of a subject, we may refer our readers to the manner in which the subject 'JESUS CHRIST' is arranged and illustrated in 'Suggestive Thoughts.'"—*Glasgow News.*

Digitized by Google

A BOOK NO FAMILY SHOULD BE WITHOUT.

New Issue of this important Work—Enlarged, in part Re-written, and thoroughly Revised to date.

TWENTY-FIFTH EDITION. *Royal 8vo, Handsome Cloth,* 10*s.* 6*d.*

A DICTIONARY OF
DOMESTIC MEDICINE AND HOUSEHOLD SURGERY,

BY

SPENCER THOMSON, M.D., EDIN., L.R.C.S.,

REVISED, AND IN PART RE-WRITTEN, BY THE AUTHOR,

AND BY

JOHN CHARLES STEELE, M.D.,

OF GUY'S HOSPITAL.

With Appendix on the Management of the Sick-room, and many Hints for the Diet and Comfort of Invalids.

In its New Form, DR. SPENCER THOMSON'S "DICTIONARY OF DOMESTIC MEDICINE" fully sustains its reputation as the "Representative Book of the Medical Knowledge and Practice of the Day" applied to Domestic Requirements.

The most recent IMPROVEMENTS in the TREATMENT OF THE SICK—in APPLIANCES for the RELIEF OF PAIN—and in all matters connected with SANITATION, HYGIENE, and the MAINTENANCE of the GENERAL HEALTH—will be found in the New Issue in clear and full detail; the experience of the Editors in the Spheres of Private Practice and of Hospital Treatment respectively, combining to render the Dictionary perhaps the most thoroughly practical work of the kind in the English Language. Many new Engravings have been introduced—improved Diagrams of different parts of the Human Body, and Illustrations of the newest Medical, Surgical, and Sanitary Apparatus.

*** *All Directions given in such a form as to be readily and safely followed.*

FROM THE AUTHOR'S PREFATORY ADDRESS.

"Without entering upon that difficult ground which correct professional knowledge and educated judgment can alone permit to be safely trodden, there is a wide and extensive field for exertion, and for usefulness, open to the unprofessional, in the kindly offices of a *true* DOMESTIC MEDICINE, the timely help and solace of a simple HOUSEHOLD SURGERY, or, better still, in the watchful care more generally known as 'SANITARY PRECAUTION,' which tends rather to preserve health than to cure disease. 'The touch of a gentle hand' will not be less gentle because guided by knowledge, nor will the *safe* domestic remedies be less anxiously or carefully administered. Life may be saved, suffering may always be alleviated. Even to the resident in the midst of civilization, the 'KNOWLEDGE IS POWER,' to do good; to the settler and emigrant it is INVALUABLE."

"Dr. Thomson has fully succeeded in conveying to t[illegible] public a vast amount of useful professional knowledge."—*Dublin Journal of Medical Science.*

"The amou[illegible]owledge conveyed in thi[illegible]g."—*Medical Times and Gazette.*

"WORTH [illegible] TO FAMILIES AN[illegible]*xford Herald.*

[illegible]N & [illegible] TREET, STRAND.

Digitized by Google

FIRST SERIES—THIRTY-FOURTH EDITION.

SECOND SERIES—NINTH EDITION.

MANY THOUGHTS OF MANY MINDS:

A Treasury of Reference, consisting of Selections from the Writings of the most Celebrated Authors. FIRST AND SECOND SERIES. Compiled and Analytically Arranged

By HENRY SOUTHGATE.

In Square 8vo., elegantly printed on toned paper.

Presentation Edition, Cloth and Gold	...	...	**12s. 6d. each volume.**
Library Edition, Half Bound, Roxburghe	...	...	**14s. „**
Do., Morocco Antique	...	...	**21s. „**

Each Series is complete in itself, and sold separately.

"'MANY THOUGHTS,' &c., are evidently the produce of years of research."—*Examiner.*

"Many beautiful examples of thought and style are to be found among the selections."—*Leader.*

"There can be little doubt that it is destined to take a high place among books of this class."—*Notes and Queries.*

"A treasure to every reader who may be fortunate enough to possess it. Its perusal is like inhaling essences; we have the cream only of the great authors quoted. Here all are seeds or gems."—*English Journal of Education.*

"Mr. Southgate's reading will be found to extend over nearly the whole known field of literature, ancient and modern."—*Gentleman's Magazine.*

"We have no hesitation in pronouncing it one of the most important books of the season. Credit is due to the publishers for the elegance with which the work is got up, and for the extreme beauty and correctness of the typography."—*Morning Chronicle.*

"Of the numerous volumes of the kind, we do not remember having met with one in which the selection was more judicious, or the accumulation of treasures so truly wonderful."—*Morning Herald.*

"The selection of the extracts has been made with taste, judgment, and critical nicety."—*Morning Post.*

"This is a wondrous book, and contains a great many gems of thought."—*Daily News.*

"As a work of reference, it will be an acquisition to any man's library."—*Publishers' Circular.*

"This volume contains more gems of thought, refined sentiments, noble axioms, and extractable sentences, than have ever before been brought together in our language."—*The Field.*

"All that the poet has described of the beautiful in nature and art, all the axioms of experience, the collected wisdom of philosopher and sage, are garnered into one heap of useful and well-arranged instruction and amusement."—*The Era.*

"The collection will prove a mine rich and inexhaustible, to those in search of a quotation."—*Art Journal.*

"Will be found to be worth its weight in gold by literary men."—*The Builder.*

"Every page is laden with the wealth of profoundest thought, and all aglow with the loftiest inspirations of genius."—*Star.*

"The work of Mr. Southgate far outstrips all others of its kind. To the clergyman, the author, the artist, and the essayist, 'Many Thoughts of Many Minds' cannot fail to render almost incalculable service."—*Edinburgh Mercury.*

"We have no hesitation whatever in describing Mr. Southgate's as the very best book of the class. There is positively nothing of the kind in the language that will bear a moment's comparison with it."—*Manchester Weekly Advertiser.*

"There is no mood in which we can take it up without deriving from it instruction, consolation, and amusement. We heartily thank Mr. Southgate for a book which we shall regard as one of our best friends and companions."—*Cambridge Chronicle.*

"This work possesses the merit of being a MAGNIFICENT GIFT-BOOK, appropriate to all times and seasons; a book calculated to be of use to the scholar, the divine, and the public man."—*Freemason's Magazine.*

"It is not so much a book as a library of quotations."—*Patriot.*

"The quotations abound in that *thought* which is the mainspring of mental exercise."—*Liverpool Courier.*

"For purposes of apposite quotation, it cannot be surpassed."—*Bristol Times.*

"It is impossible to pick out a single passage in the work which does not, upon the face of it, justify its selection by its intrinsic merit."—*Dorset Chronicle.*

"We are not surprised that a SECOND SERIES of this work should have been called for. Mr. Southgate has the catholic tastes desirable in a good Editor. Preachers and public speakers will find that it has special uses for them."—*Edinburgh Daily Review.*

"The SECOND SERIES fully sustains [illegible] served reputation of the FIRST."—*John[illegible]*

LONDON: CHARLES GRIFFIN & COMPANY.

Digitized by Google

Digitized by Google

THE NEW YORK PUBLIC LIBRARY
REFERENCE DEPARTMENT

This book is under no circumstances to be taken from the Building

Digitized by Google

DEC 9 1922

Digitized by Google

THE NEW YORK PUBLIC LIBRARY
REFERENCE DEPARTMENT

This book is under no circumstances to be taken from the Building

form 410

Digitized by Google